Drawing Number	Drawing Title	May 2014 USEI Permit Application Section Reference
General Site		
PRMI-T01	General Facility Topographic Plan - Sheet 1 (Section 19)	B
PRMI-T03	Typical Facility Site Plan	B, I
PRMI-T04	Facility Topographic Plan Existing Conditions	D
PRMI-T05a	Facility Topographic Plan Pre-RCRA Units	B, J
PRMI-T06	Facility Typical Site Utility Plan	B
PRMI-T07	Facility Transportation Routes	B
PRMI-T08	Facility Typical Traffic Plan Interim Conditions	B
PRMI-T09	Facility Typical Traffic Plan Final at Closure	B, I
PRMI-T10	Facility Typical Communication and Emergency ResponseEquipment Plan	B, F, G
PRMI-T11	Facility Typical Soil Sampling Plan	B, I
PRMI-T12	Facility Topographic Plan Interim Condidtions	B, D
PRMI-T13	Facility Typical Topographic Plan Final at Closure	I
Containment Building (Debris Area)		
773C-S01	Structural Containment Building (Debris Area) Typical Plan for Truck Ramp & Platform	D, I
773C-S02	Structural Containment Building (Debris Area) Typical Truck Platform Plan	D, I
773C-S03	Structural Containment Building (Debris Area) Typical Truck Platform - Sections and Details	D, I
773C-S04	Structural Containment Building (Debris Area) Typical Truck Ramp - Section and Details	D, I
D2020-A02	Architectural Containment Building (Debris Area) Floor Plan	C, D, I
D2020-A03	Architectural Containment Building (Debris Area) Miscellaneous Platform Plan	D, I
D2020-A04	Architectural Containment Building (Debris Area) Roof Plan	D, I
D2020-A05	Architectural Containment Building (Debris Area) Building Elevations - Sheet 1	D, I
D2020-A06	Architectual Containment Building (Debris Area) Building Elevations - Sheet 2	D, I
D2020-A07	Architectual Containment Building (Debris Area) Building Sections	D, I
D2020-C05	Civil - Containment Buildign (Debris Area) Liner Plan	D, I
D2020-C08	Civil - Containment Buildign (Debris Area) Trench Sections and Details	D, I
D2020-H01	Containment Building (Debris Area) Air Pollution Control System Section and Schematic	D, I
D2020-H03	Containment Building (Debris Area) Composite Duct System - Plan	D, I
D2020-H04	Air Pollution Control Equipment Containment Building (Debris Area) Mechanical Equipment Plan	D, I
D2020-P01	Process and Instrument Diagram Containment Building Complex (Debris Portion)	General Information
D2020-R02	General Arrangement Containment Building (Debris Area) Floor Plan	D, I
D2020-R05	General Arrangement Containment Building (Debris Area) Typical Details	D, I
D2020-R07	Equipment Arrangement Containment Building Sections	C, D, I
D2020-R08	Equipment Arrangement Containment Building Sections & Details	C, D, I

Drawing Number	Drawing Title	May 2014 USEI Permit Application Section Reference
Containment Building (Stabilization Area)		
793P-C05	Civil Containment Building (Stabilization Area) Foundation Plan	D, I
793P-C06	Civil - Containment Building (Stabilization Area) Foundation Plan @ Mixing Bins	D, I
793P-C07	Civil Containment Building (Stabilization Area) Liner Plan	D, I
793P-C08	Civil Containment Building (Stabilization Area) Slab Plan	D, I
793P-C09	Civil Contianment Building (Stabilization Area) Foundation Sections and Details - Sheet 1	D
793P-C12	Containment Building (Stabilization Area) Typical Mixing Bin Sections and Details	D
793P-C13	Civil - Containment Building (Stabilization Area) Mixing Bin Sections	D, I
793P-C14	Civil - Containment Building (Stabilization Area) Section and Details	D, I
793P-C15	Civil - Containment Building (Stabilization Area) Slab Sections and Details	D, I
793P-C16	Civil - Containment Building (Stabilization Area) Miscellaneous Sections and Details	D
793P-C17	Civil - Containment Building (Stabilization Building) Equipment Foundations Plan	I
793P-G01	Air and Process Water System Containment Building (Stabilzation Area) Plan View and Section	D, I
793P-H01	Air Pollution Control System Containment Building (Stabilization Area) Plan View and Section	D, I
793P-P03	Typical Schematic Flow Diagram Air Pollution Control System Containment Building (Stabilization Area)	D
793P-P04	Typical Schematic Flow Diagram Containment Building (Stabilization Area) Process Water System	D
793P-R01	Typical Equipment Arrangement Containment Building (Stabilization Area) Floor Plan	D, I
793P-R02	Typical Equipment Arrangement Containment Building (Stabilization Area) Elevations	D, I
PRMI-D04	Civil - Containment Building (Stabilization Building) Typical Storm Drain Profiles and Details	General Information
PRMI-R31	General Arrangement Containment Building (Stabilization Area) Typical Plan - Sheet 1	D, I
PRMI-R32	General Arrangement Containment Building (Stabilization Area) Typical Plan - Sheet 2	D, I
PRMI-R33	General Arrangement Containment Building (Stabilization Area) Typical Sections Sheet 1	D, I
PRMI-R34	General Arrangement Contianment Building (Stabilization Area) Typical Sections Sheet 2	D, I
PRMI-R35	General Arrangement Contianment Building (Stabilization Area) Typical Sections Sheet 3	D, I
Container Management Units, Storage Pads, and RCRA/TSCA/PCB Processing and Storage Building		
PRMI-C11	Grand View Idaho - Storage Pad No. 4 and Process Plant Pad Plans and Sections (Note: Includes Leachate Tanks)	C, D, I
PRMI-C12	Civil - Container Storage Area Pad No. 4 and Process Plant Pad Sections	C, D, I
PRMI-C13	Civil - Container Storage Area Pad No. 4 and Process Plant Pad Sections & Details	C, D, I
PRMI-C14	Civil- Container Storage Area Pad No. 4 and Process Plant Pad Plans and Sections	I
PRMI-C15	Civil - Container Storage Area Pad No. 4 and Process Plant Pad Plans, Sections and Details	I
PRMI-C16	Civil - Container Storage Pad No. 7 Storage and Processing Areas Grading Plan	C, D, I
PRMI-C17	Civil - Container Storage Pad No. 7 Storage and Processing Areas Sections and Details	C, D, I
PRMI-R11	Typical General Arrangement Container Storage Areas PAD NOS. 4 & 5 and Plant PAD	C, D, I
US Ecology Process Treatment Bins		
Sheet 1 of 4	General Notes	General Information
Sheet 2 of 4	Plan and Elevations	General Information
Sheet 3 of 4	Leak Detection Retainment Pan	General Information
Sheet 4 of 4	Sections and Details	General Information

Landfills

Drawing Number	Drawing Title	May 2014 USEI Permit Application Section Reference
PRMI-L01	Civil - Trenches 10 and 11 Typical Site Plan	D, I
PRMI-L02	Civil - Trenches 10 and 12 Typical Subgrade Plan	D, I
PRMI-L03	Civil - Trenches 10 and 11 Typical Final Grading Plan	D, I
PRMI-L04	Civil - Trenches 10 and 11 Cap System Sections and Details Typical Final Closure	D, I
PRMI-L05	Civil - Trechnes 10 and 11 Typical Final Closure Cap System Sections and Details	I
PRMI-L06	Civil - ET Cap Test Pad Typical Plan, Section, and Detail	I
PRMI-L11	Facility - Cell 5 Typical Site Plan	D, I, M
PRMI-L12	Civil - Cell 5 Typical Primary Liner Plan	D, I, M
PRMI-L13	Civil - Cell 5 Typical Subgrade Plan at Closure	D, I, M
PRMI-L14	Civil - Cell 5 Typical Final Grading Plan	D, I, M
PRMI-L15	Civil - Cell 5 - Phase 1 Typical Sections and Details	D, I, M
PRMI-L16	Civil - Phase 1 Typical Sections and Details	D, I, M
PRMI-L17	Civil - Cell 5 - Phase II Typical Sections and Details	D, I, M
PRMI-L18	Civil - Cell 5 - Phase II Typical Sections and Details	D, I, M
PRMI-L19	Civil - Cell 5 Final Closure Typical Cap System Sections and Details	D, I
PRMI-L21	Civil - Cell 14 Typical Site Plan	D, I, M
PRMI-L22	Civil - Cell 14 Typical Secondary Liner Plan	D, I, M
Sheet 5 of 9	Civil - Cell 14 - Final Closure Typical Final Cover Sections and Details	I
PRMI-L23	Civil - Cell 14 Typical Final Grading Plan - (REPLACED Sheet 8 of 9)	D, I, M
PRMI-L24	Civil - Phase 1 Typical Sections and Details	D, I, M
PRMI-L25	Civil - Cell 14 - Phase 2 Typical Sections and Details	D, I, M
PRMI-L26	Civil - Phase 2 Typical Sections and Details	D, I, M
PRMI-L27	Civil - Cell 14 - Phase 2 Typical Sections and Details	D, I, M
52-00-00	Cell 15 - Grand View Facility	D
52-01-01	Cell 15 - Site Plan/Cell Layout	D
52-01-02	Cell 15 - Cell Construction Phasing and Waste Limits	D
52-01-03	Cell 15 - Sections and Details Sheet 1	D
52-01-04	Cell 15 - Sections and Details Sheet 2	D
52-01-05	Cell 15 - Sections and Details Sheet 3	D
Sheet 5 of 8	Civil Cell 15 Final Closure Final Cover Grading Plan	General Information
Sheet 6 of 8	Civil Cell 15 Final Closure Typical Cross Sections	General Information
Sheet 7 of 8	Civil Cell 15 Final Closure Typical Final Cover Section and Details	General Information
52-01-06	Cell 15 - Final Cover Grading Plan	General Information
52-01-07	Cell 15 - Final Cover Sections and Details 1	General Information
52-01-08	Cell 15 - Final Cover Sections and Details 2	General Information
15-08-00	Cell 15 Modification - Cover Sheet	General Information
15-08-01	Cell 15 Modification - Phase IV Layout / Plan View	General Information
15-08-02	Cell 15 Modification - Cell Liner Sections	General Information
15-08-03	Cell 15 Modification - Interim Waste Placement	General Information
15-08-04	Cell 15 Modification - Final Waste Placement	General Information
15-08-05	Cell 15 Modification - Final Cover Grading Plan	General Information
15-08-06	Cell 15 Modification - Sumps and Risers Sections and Details	General Information
15-08-07	Cell 15 Modification - Leachate Pipe Sections and Details	General Information

Drawing Number	Drawing Title	May 2014 USEI Permit Application Section Reference
Landfills (continued)		
16-11-00	Cell 16 Drawing Index and Cover Sheet	D
16-11-01	Cell 16 Cell Liner Layout Plan View 1	D
16-11-02	Cell 16 Cell Liner Layout Plan View 2	D
16-11-03	Cell 16 Liner Sections and Details	D
16-11-04	Cell 16 construction Phasing and Waste Placement	D, M
16-11-05	Cell 16 Interim Storm Water Control Details	D
16-11-06	Cell 16 Sumps and Risers Sections and Details	D
16-11-07	Cell 16 Leachate Pipe Sections and Details	D
16-11-08	Cell 16 Waste Placement Sections and Details	D, I
Sheet 5 of 9	Cell 16 Final Closure Final Cover Grading Plan North	I
Sheet 6 of 9	Cell 16 Final Closure Final Cover Grading Plan South	I
Sheet 7 of 9	Cell 16 Final Closure Typical Cross Sections	General Information
Sheet 8 of 9	Cell 16 Final Closure Typical Final Cover Sections and Details – 1	General Information
Sheet 9 of 9	Cell 16 Final Closure Typical Final Cover Sections and Details – 2	General Information
PRMI-L28	Civil - Cell 14 - Final Closure Typical Cap System Section and Details (Referenced in Attachment 9c)	D, I, M
Sheet 8 of 9	Civil - Cell 14 Final Closure - Typical Final Cover Section and Details	General Information
PRMI-L29	Civil - Cell 14 - Final Closure typ Cap Drainage Sections and Details	D, I, M
PRMI-R15	General Facility Container Storage Area 1 Typical Container Layout & Regrading Plan	C, D, I
PRMI-R21	General Arrangement - RCRA/PCB Storage BLDG, and PCB Storage Tank Facility	C, D, I
PRMI-R22	General Arrangement - RCRA/PCB Staorage BLDG & PCB Processing BLDG, and PCB Storage Tank Facility - Sections	C, D, I
Leachate Piping and Treatment System		
720C-G01	Piping Leachate Treatment System Cell 14 Leachate Plans	D, I
720C-G02	Piping Leachate Treatment System Detail Plan No. 1	D, I
720C-G03	Piping Leachate Treatment System Deatil Plan No. 2	D, I
720C-G04	Piping Leachate Treatment System Detail Plan No. 3	D, I
720C-G05	Piping Leachate Treatment System Treatment Building Plan and Sections	D, I
720C-G06	Piping Leachate Treatment System Piping Profile	D, I
720C-G07	Piping Leachate Treatment System Leachate Piping Sections and Details	D
720C-P01	Process & Instrumentation Diagram Leachate Treatment System	C, D
720C-P02	Process & Instrumentation Diagram Existing Leachate Treatment System	C, D
Surface Impoundments and Surface Water Drainage		
PRMI-D01	Facility - Surface Drainage Plan Existing Conditions	D, N
PRMI-D02	Facility - Surface Drainage Plan Interim Conditions	N
PRMI-D03	Facility Surface Drainage Plan Final at Closure	N
PRMI-D05	Civil - Surface Water Typical Drainage Details	D, N
PRMI-D06	Civil - Collection Ponds Nos. 1, 2, & 3 Plan Sections and Details	D, I, N
PRMI-D07	Civil - Collection Ponds Nos. 1, 2, & 3 Plan Sections and Details	D, I, N
PRMI-D08	Civil - Final Closure - Cap Drainage Section and Details	N
PRMI-L41	Civil - Evaporation Pond Typical Plans, Section, and Details	D, I, M
52-01-09	Cell 15 - Site Drainage Existing Conditions and Interim Phase	D

Drawing Number	Drawing Title	May 2014 USEI Permit Application Section Reference
General Site		
PRMI-T01	General Facility Topographic Plan - Sheet 1 (Section 19)	B
PRMI-T03	Typical Facility Site Plan	B, I
PRMI-T04	Facility Topographic Plan Existing Conditions	D
PRMI-T05a	Facility Topographic Plan Pre-RCRA Units	B, J
PRMI-T06	Facility Typical Site Utility Plan	B
PRMI-T07	Facility Transportation Routes	B
PRMI-T08	Facility Typical Traffic Plan Interim Conditions	B
PRMI-T09	Facility Typical Traffic Plan Final at Closure	B, I
PRMI-T10	Facility Typical Communication and Emergency ResponseEquipment Plan	B, F, G
PRMI-T11	Facility Typical Soil Sampling Plan	B, I
PRMI-T12	Facility Topographic Plan Interim Condidtions	B, D
PRMI-T13	Facility Typical Topographic Plan Final at Closure	I

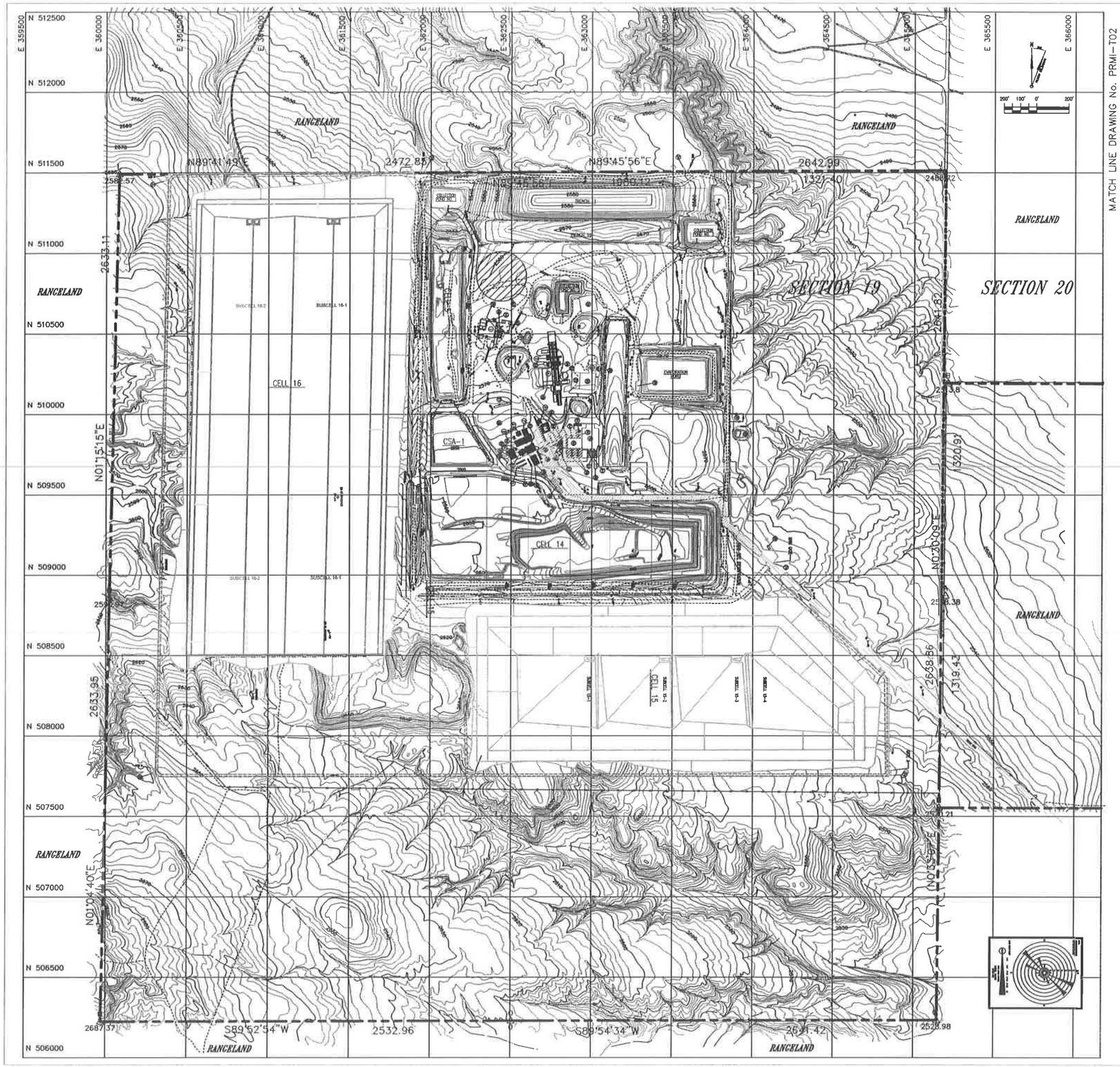

LEGEND

- 5/8" RCW PIN W/ ALUMINUM CAP
- POWER POLE
- U-14 WELL
- FENCE LINE
- PROPERTY BOUNDARY
- UNIMPROVED ROAD
- PAVED ROAD
- 2500 EXISTING TOPOGRAPHY
- RCRA UNIT BOUNDARY
- CULVERT
- DRAINAGE
- CARRIER PIPE
- POND WATER TRANSFER PIPE
- 34 FACILITY KEY NUMBER
- LEACHATE PIPE W/SLEEVE

FACILITY KEY

1 CONTAINER STORAGE PAD 4
2 COMPRESSOR/ACC BUILDING
3 STABILIZATION FACILITY OFFICE
4 STABILIZATION FACILITY
5 PCB PROCESSING BUILDING
6 VEHICLE WASH FACILITY
7 FIREHOUSE
8 FIELD TECH/PPE BUILDING
9 STORAGE BUILDING
10 MAINTENANCE SHOP
11 DECONTAMINATION BUILDING
12 LAB OFFICES
13 RECEIVING OFFICE/LAB
14 PAD 4 OFFICE
15 FUEL STORAGE TANKS/FUELING STATION
16 CONTAINMENT BUILDING
17 PUMP HOUSE/WATER STORAGE TANKS
18 COMPRESSED GAS STORAGE AREA
19 ADMINISTRATION BUILDING
20 ADMINISTRATION/LUNCH ROOM
21 ADMINISTRATION BUILDING
22 RECORDS STORAGE BUILDING
23 REAGENT STORAGE
24 "UNASSIGNED"
25 SECURITY BUILDING
26 PROPANE TANK
27 SAMPLING PLATFORM
28 STAGING AREA
29 TRUCK SCALE
30 FLAG POLE
31 WEATHER STATION
32 DIESEL & PCB STORAGE TANK CONTAINMENT
33 UNDERGROUND CLEAN WATER TANK
34 EVACUATION GATES
35 RCRA STORAGE TANKS-4 UNITS
36 CONTAINER STORAGE PAD 5
37 PAD 6-RCRA/PCB STORAGE BUILDING APRON
38 "UNASSIGNED"
39 STABILIZATION BUILDING
40 BAG HOUSE
41 HEPA FILTER HOUSE AND FAN
42 YARD TRUCK SCALE
43 CONTAINER STORAGE PAD 7
44 CONTAINMENT BUILDING TRUCK UNLOADING APRONS 1,2 AND 3
45 CONTAINMENT BUILDING TRUCK UNLOADING RAMP
46 STABILIZATION BUILDING TRUCK UNLOADING APRONS 1 AND 2
47 PROCESS PLANT PAD
48 LEACHATE TREATMENT SYSTEM
49 STABILIZATION FACILITY ADDITIVE SILOS
50 STABILIZATION BUILDING ADDITIVE SILOS
51 EVAPORATION POND LOADING/UNLOADING AREA
52 OFFICE TRAILER SANITARY TANK
53 LAB WASTE HOLDING TANK
54 CONTROL HOUSE
55 EZ CAP TEST PAD

GENERAL NOTES:

1. EXISTING SITE TOPOGRAPHY, PHYSICAL FEATURES AND DELINEATIONS OBTAINED FROM AERIAL PHOTOGRAPHY AND SURVEYED DATUM PROVIDED TO ENVIROSOURCE TECHNOLOGIES BY: J.J. HOWARD ENGINEERING-SURVEYING, 1975-A HILL ROAD; BOISE, IDAHO 83702. DATE OF ORIGINAL SURVEY - NOVEMBER 4, 1995.
2. ADDITIONALLY THE FOLLOWING AREAS OF THE SITE HAVE BEEN UPDATED AND INCORPORATED INTO THE EXISTING SITE PLAN AS FOLLOWS:
   - A. AN ADDITIONAL 1,000 FEET TO THE NORTH OF SECTION 19 HAS BEEN SURVEYED AND INCORPORATED INTO THE EXISTING TOPOGRAPHY. SURVEY BY: J.J. HOWARD DATED FEBRUARY 20, 1998.
   - B. STABILIZATION AND CONTAINMENT BUILDING UPDATED AS OF JANUARY 14, 1997. SURVEY BY: J.J. HOWARD. DESIGN CONTOURS BY: ENVIROSOURCE TECHNOLOGIES.
   - C. PAD 4 PROCESS PLANT AREA UPDATED AS OF APRIL 15, 1998. SURVEY BY: J.J. HOWARD.
   - D. LEACHATE FORCE MAIN AND SOIL STOCKPILE SURVEY UPDATED AS OF FEBRUARY 13, 1998. SURVEY BY: J.J. HOWARD.
   - E. THE CURRENT TOP OF WASTE ELEVATIONS FOR CELL 5 AS OF JANUARY 2, 1996. SURVEY BY: J.J. HOWARD.
   - F. THE CURRENT TOP OF WASTE ELEVATIONS FOR CELL 14 AS OF JANUARY 04, 2001. SURVEY BY: J.J. HOWARD.
   - G. TOPOGRAPHY OF TRENCHES 10 AND 11 UPDATED AS OF SEPTEMBER 12, 2000. SURVEY BY: J.J. HOWARD.
   - H. UPDATE OF CONTAINER STORAGE AREA NO. 1 TOPOGRAPHY AS OF JUNE 18, 1998. SURVEY BY: J.J. HOWARD.
   - I. BORROW AREA TOPOGRAPHY UPDATED AS OF DECEMBER 12, 2000. SURVEY BY: J.J. HOWARD.
   - J. WEST HAUL ROAD TOPOGRAPHY UPDATED AS OF DECEMBER 05, 2000. SURVEY BY: J.J. HOWARD.
   - K. EZ CAP TEST PAD TOPOGRAPHY UPDATED AS OF NOVEMBER 06, 2000. SURVEY BY: J.J. HOWARD.
3. NO PORTION OF THE 100-YEAR FLOOD PLAIN EXISTS WITHIN SECTION 19.
4. POTENTIOMETRIC SURFACE OF LOWER AND UPPER AQUIFER REPRESENTED, AS MEASURED SPRING 2006.
5. NORTHERN PORTIONS OF THE POTENTIOMETRIC SURFACE OF THE LOWER AQUIFER HAVE BEEN TRIMMED FROM VIEW TO ALLOW FOR REPRESENTATION OF THE UPPER AQUIFER.
6. GROUNDWATER FLOW RATE INFORMATION FOR THE UPPER AND LOWER AQUIFER IS PROVIDED IN SECTION E.3.C.4 OF PERMIT ATTACHMENT 11.

REV	BY / DATE	CHK'D / DATE	DESCRIPTION	PROJ. ENGR / DATE	PROJ. MGR / DATE
F	MJT 7/19		PART B PERMIT RENEWAL		
E	MJT 5/19		CELL 16		
D	MJT 1/09		CELL 15 MODIFICATIONS		
C	MJM		November 12, 2004 Permit		M MJM
B	MJ MJM		ISSUED IN RESPONSE TO MODIFICATION DATED NOVEMBER 2, 2006		MJ MJM
A	MJ MJM		ISSUED FOR PART B PERMIT RENEWAL APPLICATION		MJ MJM

US ecology

SITE B
GRAND VIEW, IDAHO
US EPA ID NO. IDD 073 114 654

TITLE:
GENERAL FACILITY
TOPOGRAPHIC PLAN
SHEET 1 - (SECTION 19)

DRAWN BY: MJ	DATE: 1/20/98	SCALE: 1"=200'	FILE CODE: PRMIPT03		REV. NO.
CHECKED	DATE	ENGINEER	DATE	DWG. NO. PRMI-T01	F
PROJ. MGR.	DATE	APPROVED	DATE	PROJ. NO. PRMI	

DWG. NO. PRMI-T03
PROJ. NO. PRM

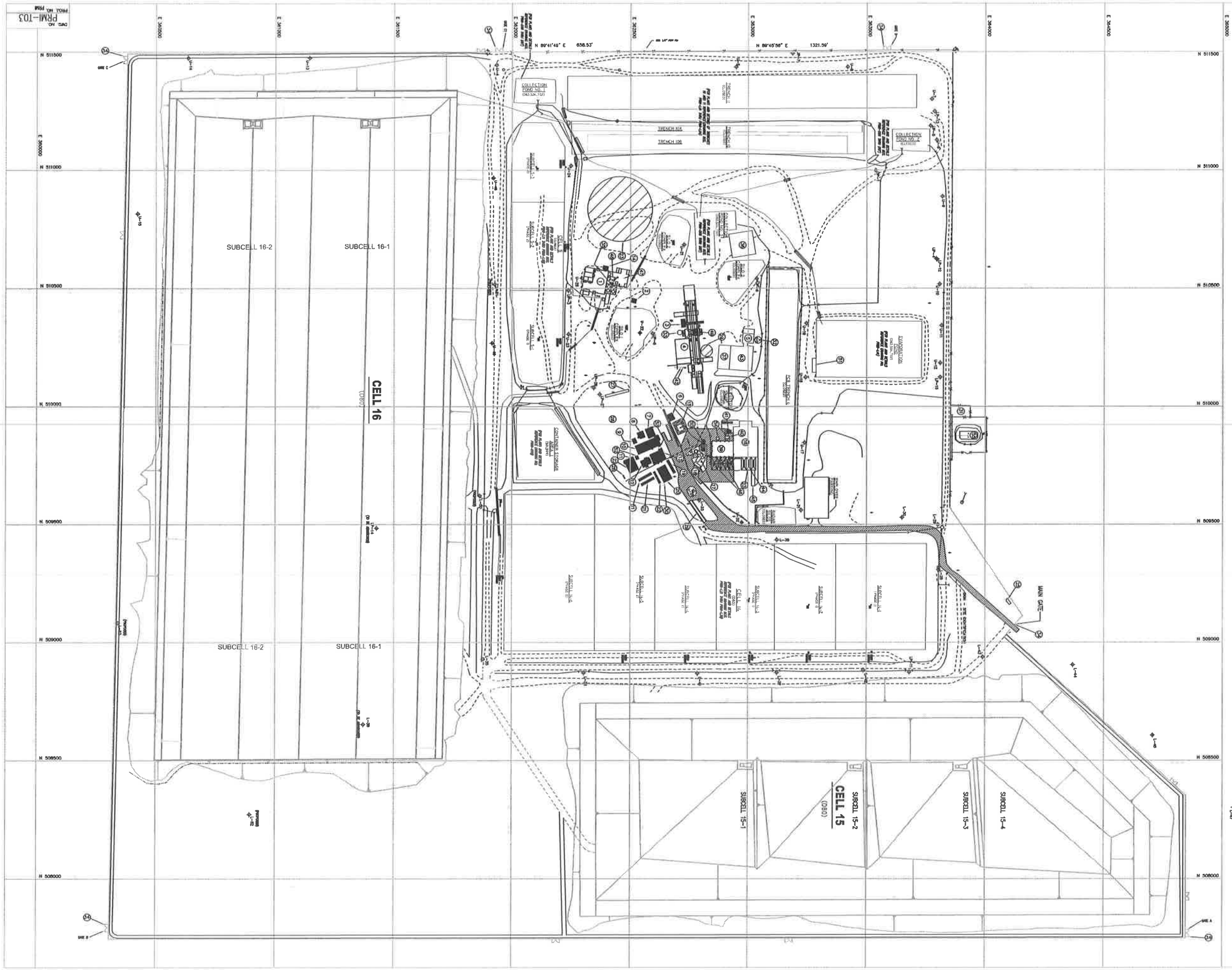

LEGEND

- 5/8" IRON PIN W/ ALUMINUM CAP
- POWER POLE
- WELL
- FENCE LINE
- PROPERTY BOUNDARY
- UNIMPROVED ROAD
- PAVED ROAD
- RCRA UNIT BOUNDARY
- CULVERT
- DRAINAGE
- CARRIER PIPE
- POND WATER TRANSFER PIPE
- FACILITY KEY NUMBER
- LEACHATE PIPE W/FLOWDIR

FACILITY KEY AND PROCESS CODES

1 CONTAINER STORAGE PAD 6 (SW,PM)
2 COMPOSTING/ACC BUILDING
3 SHRED/BOXER FACILITY OFFICE
4 SHRED/BOXER FACILITY (SW,PM)
5 PCB PROCESSING BUILDING
6 VEHICLE WASH FACILITY
7 FIREHOUSE
8 FIELD DECN/PPE BUILDING
9 (RCRA)(SE BUILDING)
10 MAINTENANCE SHOP
11 ELECTROCHEMICAL BUILDING
12 LAB OFFICES
13 RECEIVING OFFICE/LAB
14 PAD 4 OFFICE
15 FUEL STORAGE TANKS/PCB/LPG TANKER
16 CONTAINERS BUILDING (SOLID,SW)
17 PUMP HOUSE/WATER STORAGE TANKS
18 COMPRESSED GAS STORAGE AREA
19 ABANDONMENT BUILDING
20 ABANDONMENT/LUNCH ROOM
21 ABANDONMENT BUILDING
22 RECEIVING STORAGE BUILDING
23 FEEDSTOCK STORAGE
24 "UNASSIGNED"
25 SECURITY BUILDING
26 PROPANE TANK
27 SAMPLING PLATFORM
28 SHRINKS AREA
29 TRUCK SCALE
30 FLAG POLE
31 WEATHER STATION
32 RCRA & PCB STORAGE TANK CONTAINMENT
33 UNDERGROUND CLEAN WATER TANK
34 EXCAVATION AREA
35 RCRA STORAGE TANKS-4 UNITS (SOLID)
36 CONTAINER STORAGE PAD 8 (SW,PM)
37 PAD 8-RCRA/PCB STORAGE BUILDING APRON
38 "UNASSIGNED"
39 STABILIZATION BUILDING (SOLID,PM)
40 GAS HOUSE
41 NOTA FILTER HOUSE AND FAN
42 TIRE TRUCK SCALE
43 CONTAINER STORAGE PAD 7 (SW,PM)
44 CONTAINER BUILDING TRUCK UNLOADING APRONS 1,2 AND 3 (SW)
45 CONTAINER BUILDING TRUCK UNLOADING RAMP
46 STABILIZATION BUILDING TRUCK UNLOADING APRONS 1 AND 2 (SW)
47 PROCESS PLANT PAD
48 LEACHATE TREATMENT SYSTEM
49 STABILIZATION FACILITY ASSAYING SILOS
50 STABILIZATION BUILDING ASSAYING SILOS
51 EVAPORATION POND LOADING/UNLOADING AREA
52 OFFICE TRAILER SHADOW TANK
53 LAB WASTE HOLDING TANK
54 CONTROL HOUSE
55 EX CAP TEST PAD

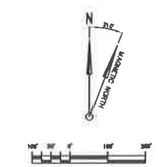

REV.	BY	DATE	DESCRIPTION
F	WJT	5/14	PART B PERMIT RENEWAL
E	WJT	3/13	CELL 16
D	WJT	8/06	CELL 15 MODIFICATIONS
C			NOVEMBER 2, 2006 PERMIT MOD
B			USDI RCRA PERMIT DATED NOVEMBER 12, 2004
A	BR	3/04/04	ISSUED FOR PART B PERMIT RENEWAL APPLICATION

US ecology

SITE B
GRAND VIEW, IDAHO
US EPA ID NO. IDD 073 114 854

TITLE:
TYPICAL
FACILITY SITE PLAN

DRAWN BY: BR DATE: 3/05/98 SCALE: FILE CODE: PRMI003 DWG. NO. PRMI-T03 REV. NO. F
CHECKED DATE ENGINEER DATE
PROJ. MGR. DATE APPROVED DATE PROJ. NO. PRM

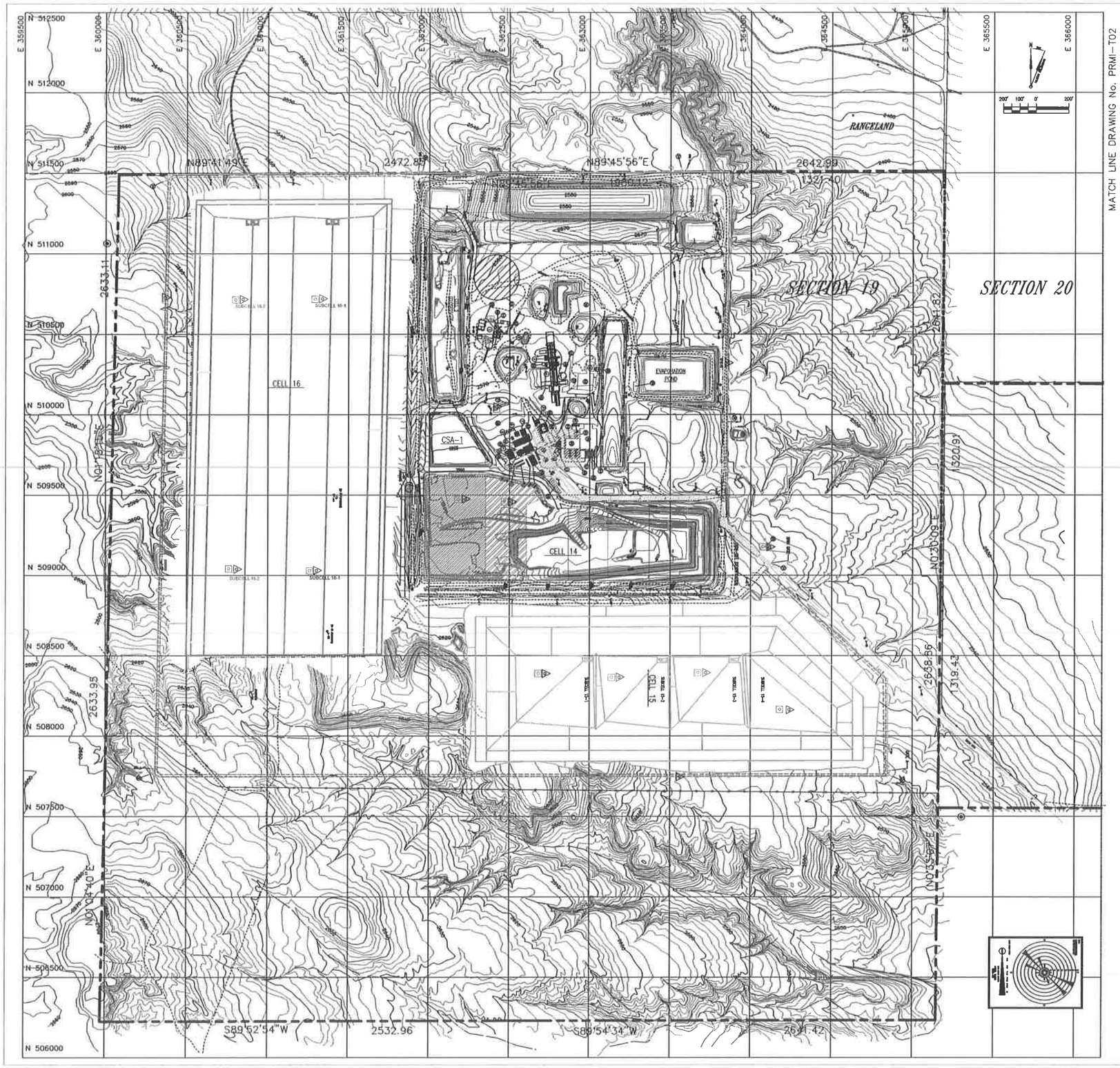

LEGEND

- 5/8" REBAR PIN W/ ALUMINUM CAP
- POWER POLE
- U-14 WELL
- FENCE LINE
- PROPERTY BOUNDARY
- UNIMPROVED ROAD
- PAVED ROAD
- 2600 EXISTING TOPOGRAPHY
- RCRA UNIT BOUNDARY
- CULVERT
- DRAINAGE
- CARRIER PIPE
- POND WATER TRANSFER PIPE
- 34 FACILITY KEY NUMBER
- LEACHATE PIPE W/SLEEVE
- SOIL SAMPLE LOCATIONS SET BRIDGE SPIKE W/ALUMINUM TAG
- ENVIROMENTAL DOSIMETER LOCATION (TLD)
- RADON MONITORING STATION
- AIR MONITORING LOCATION
- SUBCELL 14-8
- SUBCELL 14-5

FACILITY KEY

1 CONTAINER STORAGE PAD G
2 CONTAINERIZED/PACK BUILDING
3 DEVELOPMENT FACILITY OFFICE
4 DEVELOPMENT FACILITY
5 PCB TREATMENT BUILDING
6 WASTE WATER FACILITY
7 PERIMETER
8 FULL DEVELOPED BUILDING
9 STORAGE BUILDING
10 DEVELOPMENT SHOP
11 DECONTAMINATION BUILDING
12 LAB ANNEXES
13 DEVELOPED OFFICE/LAB
14 PAD A OFFICE
15 FUEL STORAGE TANKS/PUMPING STATION
16 CONTAINERIZED BUILDING
17 PUMP HOUSE/WATER STORAGE TANKS
18 CONTAINERIZED AND STORAGE AREA
19 ADMINISTRATION BUILDING
20 ADMINISTRATION/LABORATORY
21 ADMINISTRATION BUILDING
22 RECEIVING STORAGE BUILDING
23 VEHICLE STATIONS
24 "WAREHOUSE"
25 DECONTAMINATION BUILDING
26 PROTECTIVE SHELTER
27 SAMPLING PLATFORM
28 STORAGE AREA
29 TRUCK SCALE
30 FLAG POLE
31 STORAGE TANKS
32 HOUSE & POD TRAINING TANK CONTAINMENT
33 DECONTAMINATION CLEANS TRUCK TANK
34 EVAPORATION BASIN
35 PCB STORAGE TANKS-4 TANKS
36 CONTAINERS STORAGE PAD D
37 PAD D-ACCESS/PCB STORAGE BUILDING ADDITIONS
38 "WAREHOUSE"
39 DEVELOPMENT BUILDING
40 DEVELOPMENT BUILDING
41 DEVELOPMENT BUILDING
42 DEVELOPMENT BUILDING
43 DEVELOPMENT BUILDING
44 DEVELOPMENT BUILDING
45 DEVELOPMENT BUILDING
46 DEVELOPMENT BUILDING
47 DEVELOPMENT BUILDING
48 DEVELOPMENT BUILDING
49 DEVELOPMENT BUILDING
50 DEVELOPMENT BUILDING ADDITIONS
51 DEVELOPMENT BUILDING ADDITIONS
52 DEVELOPMENT PAD LOADING/PACKAGING AREA
53 CRANE WHEELS DRIVEWAY PAD
54 LAB WASTE BUILDING TANK
55 CONTAINER STORAGE
56 EF CAP TEST PAD

GENERAL NOTES:

1. EXISTING SITE TOPOGRAPHY, PROVIDED REFERENCE AND BACKGROUNDING REFERENCE PHOTO ARCHIVE, PHOTOGRAPHY AND SURVEYED BASED PROVIDED BY ENGINEERING TECHNOLOGIES CO. AS SITE ENGINEERING-REFERENCE, PER-A-ALL BASE, BASE, BASED ACTUAL DATE OF ORIGINAL SURVEY - NOVEMBER 4, 1996.

2. ADDITIONALLY THE FOLLOWING SHOWN OF THE SITE HAVE BEEN UPDATED AND INCORPORATED INTO THE CURRENT SITE PLAN AS FOLLOWS:

A. PER ADDITIONAL LAND FREE TO THE BASIN OF SECTION 19 HAS BEEN SURVEYED AND INCORPORATED INTO THE CURRENT TOPOGRAPHY. SURVEY BY A.A. WIDMER DATED FEBRUARY 20, 1998.

B. DEVELOPMENT AND CONTAINMENT BUILDING UPDATED AS OF JANUARY 14, 1997. SURVEY BY A.A. WIDMER. BEING CONDUCTED BY ENGINEERING TECHNOLOGIES.

C. PAD 3 PROCESS PLANT AREA UPDATED AS OF APRIL 15, 2000. SURVEY BY A.A. WIDMER.

D. LEACHATE PIPING WORK AND PAD, SPECIFICALLY SURVEY UPDATED AS OF FEBRUARY 18, 2003. SURVEY BY A.A. WIDMER.

E. THE CURRENT TOP OF WASTE ELEVATIONS FOR CELL 3 AS OF JANUARY 2, 2004. SURVEY BY A.A. WIDMER.

F. THE CURRENT TOP OF WASTE ELEVATIONS FOR CELL 14 AS OF JANUARY 04, 2006. SURVEY BY A.A. WIDMER.

G. TOPOGRAPHY OF TRENCHES 15 AND 11 UPDATED AS OF SEPTEMBER 12, 2006. SURVEY BY A.A. WIDMER.

H. WIDTH OF CONTAINED BUILDING WORK NO. 1 INTERPRETED AS OF JUNE 18, 2008. SURVEY BY A.A. WIDMER.

I. BUILDING AREA TOPOGRAPHY UPDATED AS OF DECEMBER 19, 2008. SURVEY BY A.A. WIDMER.

J. WEST AREA, BASE TOPOGRAPHY UPDATED AS OF DECEMBER 08, 2008. SURVEY BY A.A. WIDMER.

K. EF CAP TEST PAD TOPOGRAPHY UPDATED AS OF NOVEMBER 08, 2010. SURVEY BY A.A. WIDMER.

REV.	BY / DATE	CHK'D / DATE	DESCRIPTION	PROJ. ENGR. / DATE	PROJ. MGR. / DATE
G	MW 5/14		PART B PERMIT RENEWAL		
F	GRM 12/13		2012 CLASS 2 PERMIT MOD		
E	MW 12/12		CELL 16		
D	DHB 1/19/10		2008 CLASS 2 PERMIT MOD	DHB 1/19/10	
C	M 1/1/99		2003 PERMIT RENEWAL	M 1/1/99	
B	M 1/1/99		ISSUED IN RESPONSE TO MOD LETTER DATED JUNE 20, 1999	MW 1/1/99	
A	M 1/19/98		ISSUED FOR PART B PERMIT RENEWAL APPLICATION		

US ecology

SITE B
GRAND VIEW, IDAHO
US EPA ID NO. IDD 073 114 654

TITLE: RADIOLOGICAL ENVIRONMENTAL MONITORING LOCATIONS

DRAWN BY: MK DATE: 2/20/98	SCALE: 1"=200'	FILE CODE: PRMIT04	REV. NO.
CHECKED DATE	ENGINEER DATE	DWG. NO.: PRMIT04 WINDROSE	G
PROJ. MGR. DATE	APPROVED DATE	PROJ. NO. PRMI	

DWG. NO. PRM-T05A
PROJ. NO. 1928

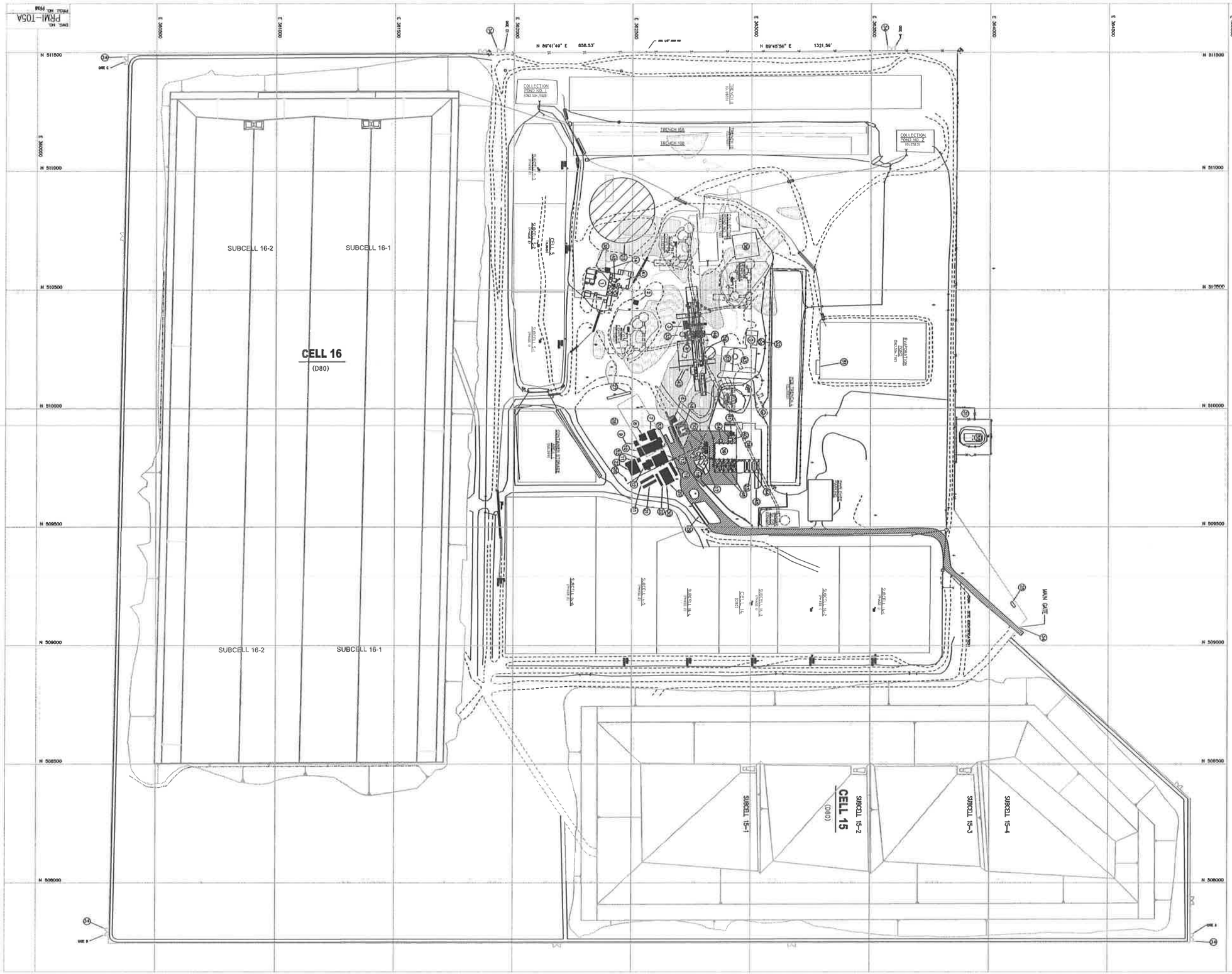

LEGEND

- 5/8" IRON PIN W/ ALUMINUM CAP
- POWER POLE
- FENCE LINE
- PROPERTY BOUNDARY
- UNIMPROVED ROAD
- PAVED ROAD
- RCRA UNIT BOUNDARY
- CULVERT
- DRAINAGE
- CARBON PIPE
- POND WATER TRANSFER PIPE
- FACILITY KEY NUMBER
- LEACHATE PIPE W/FLOWTIC
- TEMPORARY CONTAINER STORAGE AREA (RCRA, TOSCA, CERCLA)
- BURIED DRUM AREA (PRE-RCRA)

FACILITY KEY AND PROCESS CODES

1 CONTAINER STORAGE PAD 4 (SH,JH)
2 COMPRESSOR/ACC BUILDING
3 SHIPLOADER FACILITY OFFICE
4 SHIPLOADER FACILITY (SH,JH)
5 PCB PROCESSING BUILDING
6 VEHICLE WASH FACILITY
7 PRESSCAKE
8 FIELD TECH/PPE BUILDING
9 STORAGE BUILDING
10 WAREHOUSE SHOP
11 RECEIVERMAKER BUILDING
12 LAB OFFICES
13 RECEIVING OFFICE/LAB
14 PAD 4 OFFICE
15 FUEL STORAGE TANKS/FUELING STATION
16 COMPRESSOR BUILDING (SH,JH,JM)
17 PUMP HOUSE/WATER STORAGE TANKS
18 COMPRESSED GAS STORAGE AREA
19 ADMINISTRATION BUILDING
20 ADMINISTRATION/LUNCH ROOM
21 ADMINISTRATION BUILDING
22 RECEIVING STORAGE BUILDING
23 WAREHOUSE STORAGE
24 "CONTAINERS"
25 DELIVERY BUILDING
26 PRESSURE TANK
27 SHIPLOAD PLATFORM
28 TRUCKS AREA
29 TRUCK SCALE
30 FLAG POLE
31 RECEIVER SUMPS
32 DIESEL & PCB STORAGE TANK COMPOUNDS
33 UNDERGROUND CLEAN WATER TANK
34 EVACUATION SPACES
35 RCRA STORAGE TANKS-4 UNITS (SH,JH)
36 CONTAINER STORAGE PAD 5 (SH,JH)
37 PAD 6-RCRA/PCB STORAGE BUILDING APRON
38 "CONTAINERS"
39 SHIPLOADER BUILDING (SH,JH,JM)
40 BOB HOUSE
41 HEPA FILTER HOUSE AND FAN
42 1000 TRUCK SCALE
43 CONTAINER STORAGE PAD 7 (SH,JH)
44 COMPONENT BUILDING TRUCK UNLOADING APRONS 1,2 AND 3 (SH)
45 COMPONENT BUILDING TRUCK UNLOADING RAMP
46 SHIPLOADER BUILDING TRUCK UNLOADING APRONS 1 AND 2 (SH)
47 PROCESS PLANT PAD
48 LEACHATE TREATMENT SYSTEM
49 SHIPLOADER FACILITY ARCHIVE TRUCK
50 SHIPLOADER BUILDING ARCHIVE TRUCK
51 EVAPORATION POND LOADING/UNLOADING AREA
52 OFFICE TRAILER SHADOW TANK
53 LAB WASTE HOLDING TANK
54 GENERAL SERVICE
55 ST CAP TEST PAD

N
RLE
MAGNETIC SOUTH

10' 20' 0' 10' 20'

REV.	BY	CHK'D	DESCRIPTION	PROJ. MGR.	DATE
F	MJT 3/16		PART B PERMIT RENEWAL		
E	MJT 3/16		CELL 16		
D	MJT 9/06		CELL 15 MODIFICATIONS		
C			NOVEMBER 2, 2006 PERMIT MOD		
B			USED RCRA PERMIT DATED NOVEMBER 12, 2004		
A	MK 3/04/04		ISSUED FOR PART B PERMIT RENEWAL APPLICATION		

US ecology

SITE B
GRAND VIEW, IDAHO
US EPA ID NO. IDD 073 114 654

TITLE:
FACILITY
PLAN WITH
PRE-RCRA UNIT

DRAWN BY: MB DATE: 3/05/98 SCALE: FILE CODE: FRAMEGUID: REV. NO.
CHECKED: DATE: ENGINEER: DATE: DWG. NO. PRM-T05A
PROJ. MGR.: DATE: APPROVED: DATE: PROJ. NO. PRM
F

REV.		DESCRIPTION
F		PART B PERMIT RENEWAL
E		CELL 16
D		CELL 15 MODIFICATIONS
C		NOVEMBER 2, 2006 PERMIT MOD
B		USEI RCRA PERMIT DATED NOVEMBER 12, 2004
A		ISSUED FOR PART B PERMIT RENEWAL APPLICATION

US ecology

SITE B
GRAND VIEW, IDAHO
US EPA ID NO. IDD 073 114 654

TITLE: FACILITY
TYPICAL SITE UTILITY PLAN

DWG. NO. PRMI-T06
REV. NO. F

F			PART B PERMIT RENEWAL
E			CELL 16
D			CELL 15 MODIFICATIONS
C			NOVEMBER 2, 2006 PERMIT MOD
B			USEI RCRA PERMIT DATED NOVEMBER 12, 2004
A			ISSUED FOR PART B PERMIT RENEWAL APPLICATION
REV.	BY DATE	CHK'D DATE	DESCRIPTION

US ecology

SITE B
GRAND VIEW, IDAHO
US EPA ID NO. IDD 073 114 654

TITLE:
FACILITY
TYPICAL TRAFFIC PLAN
EXISTING CONDITIONS

DWG. NO. PRMI-T07
PROJ. NO. PRM
REV. NO. F

DWG NO. PRMI-108
PROJ. NO. PRM

N 89°41'48" E 658.53'
N 89°45'56" E 1321.96'

N 511500
N 511000
N 510500
N 510000
N 509500
N 509000
N 508500
N 508000

E 3000000
E 3002000
E 3004000
E 3006000
E 3008000
E 3010000
E 3012000
E 3014000

SUBCELL 16-2
SUBCELL 16-1
CELL 16
(D80)

COLLECTION POND NO. 1
COLLECTION POND NO. 2
TRENCH 108
TRENCH 109
TRENCH 110
TRENCH 111
TRENCH 112
TRENCH 113
TRENCH 114
TRENCH 115
TRENCH 116
TRENCH 117
TRENCH 118
TRENCH 119
TRENCH 120
TRENCH 121
TRENCH 122
TRENCH 123
TRENCH 124
TRENCH 125
TRENCH 126
TRENCH 127
TRENCH 128
TRENCH 129
TRENCH 130
TRENCH 131
TRENCH 132
TRENCH 133
TRENCH 134
TRENCH 135
TRENCH 136
TRENCH 137
TRENCH 138
TRENCH 139
TRENCH 140
TRENCH 141
TRENCH 142
TRENCH 143
TRENCH 144
TRENCH 145
TRENCH 146
TRENCH 147
TRENCH 148
TRENCH 149
TRENCH 150
TRENCH 151
TRENCH 152
TRENCH 153
TRENCH 154
TRENCH 155
TRENCH 156
TRENCH 157
TRENCH 158
TRENCH 159
TRENCH 160
TRENCH 161
TRENCH 162
TRENCH 163
TRENCH 164
TRENCH 165
TRENCH 166
TRENCH 167
TRENCH 168
TRENCH 169
TRENCH 170
TRENCH 171
TRENCH 172
TRENCH 173
TRENCH 174
TRENCH 175
TRENCH 176
TRENCH 177
TRENCH 178
TRENCH 179
TRENCH 180
TRENCH 181
TRENCH 182
TRENCH 183
TRENCH 184
TRENCH 185
TRENCH 186
TRENCH 187
TRENCH 188
TRENCH 189
TRENCH 190
TRENCH 191
TRENCH 192
TRENCH 193
TRENCH 194
TRENCH 195
TRENCH 196
TRENCH 197
TRENCH 198
TRENCH 199
TRENCH 200
TRENCH 201
TRENCH 202
TRENCH 203
TRENCH 204
TRENCH 205
TRENCH 206
TRENCH 207
TRENCH 208
TRENCH 209
TRENCH 210
TRENCH 211
TRENCH 212
TRENCH 213
TRENCH 214
TRENCH 215
TRENCH 216
TRENCH 217
TRENCH 218
TRENCH 219
TRENCH 220
TRENCH 221
TRENCH 222
TRENCH 223
TRENCH 224
TRENCH 225
TRENCH 226
TRENCH 227
TRENCH 228
TRENCH 229
TRENCH 230
TRENCH 231
TRENCH 232
TRENCH 233
TRENCH 234
TRENCH 235
TRENCH 236
TRENCH 237
TRENCH 238
TRENCH 239
TRENCH 240
TRENCH 241
TRENCH 242
TRENCH 243
TRENCH 244
TRENCH 245
TRENCH 246
TRENCH 247
TRENCH 248
TRENCH 249
TRENCH 250
TRENCH 251
TRENCH 252
TRENCH 253
TRENCH 254
TRENCH 255
TRENCH 256
TRENCH 257
TRENCH 258
TRENCH 259
TRENCH 260
TRENCH 261
TRENCH 262
TRENCH 263
TRENCH 264
TRENCH 265
TRENCH 266
TRENCH 267
TRENCH 268
TRENCH 269
TRENCH 270
TRENCH 271
TRENCH 272
TRENCH 273
TRENCH 274
TRENCH 275
TRENCH 276
TRENCH 277
TRENCH 278
TRENCH 279
TRENCH 280
TRENCH 281
TRENCH 282
TRENCH 283
TRENCH 284
TRENCH 285
TRENCH 286
TRENCH 287
TRENCH 288
TRENCH 289
TRENCH 290
TRENCH 291
TRENCH 292
TRENCH 293
TRENCH 294
TRENCH 295
TRENCH 296
TRENCH 297
TRENCH 298
TRENCH 299
TRENCH 300
TRENCH 301
TRENCH 302
TRENCH 303
TRENCH 304
TRENCH 305
TRENCH 306
TRENCH 307
TRENCH 308
TRENCH 309
TRENCH 310
TRENCH 311
TRENCH 312
TRENCH 313
TRENCH 314
TRENCH 315
TRENCH 316
TRENCH 317
TRENCH 318
TRENCH 319
TRENCH 320
TRENCH 321
TRENCH 322
TRENCH 323
TRENCH 324
TRENCH 325
TRENCH 326
TRENCH 327
TRENCH 328
TRENCH 329
TRENCH 330
TRENCH 331
TRENCH 332
TRENCH 333
TRENCH 334
TRENCH 335
TRENCH 336
TRENCH 337
TRENCH 338
TRENCH 339
TRENCH 340
TRENCH 341
TRENCH 342
TRENCH 343
TRENCH 344
TRENCH 345
TRENCH 346
TRENCH 347
TRENCH 348
TRENCH 349
TRENCH 350
TRENCH 351
TRENCH 352
TRENCH 353
TRENCH 354
TRENCH 355
TRENCH 356
TRENCH 357
TRENCH 358
TRENCH 359
TRENCH 360
TRENCH 361
TRENCH 362
TRENCH 363
TRENCH 364
TRENCH 365
TRENCH 366
TRENCH 367
TRENCH 368
TRENCH 369
TRENCH 370
TRENCH 371
TRENCH 372
TRENCH 373
TRENCH 374
TRENCH 375
TRENCH 376
TRENCH 377
TRENCH 378
TRENCH 379
TRENCH 380
TRENCH 381
TRENCH 382
TRENCH 383
TRENCH 384
TRENCH 385
TRENCH 386
TRENCH 387
TRENCH 388
TRENCH 389
TRENCH 390
TRENCH 391
TRENCH 392
TRENCH 393
TRENCH 394
TRENCH 395
TRENCH 396
TRENCH 397
TRENCH 398
TRENCH 399
TRENCH 400
TRENCH 401
TRENCH 402
TRENCH 403
TRENCH 404
TRENCH 405
TRENCH 406
TRENCH 407
TRENCH 408
TRENCH 409
TRENCH 410
TRENCH 411
TRENCH 412
TRENCH 413
TRENCH 414
TRENCH 415
TRENCH 416
TRENCH 417
TRENCH 418
TRENCH 419
TRENCH 420
TRENCH 421
TRENCH 422
TRENCH 423
TRENCH 424
TRENCH 425
TRENCH 426
TRENCH 427
TRENCH 428
TRENCH 429
TRENCH 430
TRENCH 431
TRENCH 432
TRENCH 433
TRENCH 434
TRENCH 435
TRENCH 436
TRENCH 437
TRENCH 438
TRENCH 439
TRENCH 440
TRENCH 441
TRENCH 442
TRENCH 443
TRENCH 444
TRENCH 445
TRENCH 446
TRENCH 447
TRENCH 448
TRENCH 449
TRENCH 450
TRENCH 451
TRENCH 452
TRENCH 453
TRENCH 454
TRENCH 455
TRENCH 456
TRENCH 457
TRENCH 458
TRENCH 459
TRENCH 460
TRENCH 461
TRENCH 462
TRENCH 463
TRENCH 464
TRENCH 465
TRENCH 466
TRENCH 467
TRENCH 468
TRENCH 469
TRENCH 470
TRENCH 471
TRENCH 472
TRENCH 473
TRENCH 474
TRENCH 475
TRENCH 476
TRENCH 477
TRENCH 478
TRENCH 479
TRENCH 480
TRENCH 481
TRENCH 482
TRENCH 483
TRENCH 484
TRENCH 485
TRENCH 486
TRENCH 487
TRENCH 488
TRENCH 489
TRENCH 490
TRENCH 491
TRENCH 492
TRENCH 493
TRENCH 494
TRENCH 495
TRENCH 496
TRENCH 497
TRENCH 498
TRENCH 499
TRENCH 500
TRENCH 501
TRENCH 502
TRENCH 503
TRENCH 504
TRENCH 505
TRENCH 506
TRENCH 507
TRENCH 508
TRENCH 509
TRENCH 510
TRENCH 511
TRENCH 512
TRENCH 513
TRENCH 514
TRENCH 515
TRENCH 516
TRENCH 517
TRENCH 518
TRENCH 519
TRENCH 520
TRENCH 521
TRENCH 522
TRENCH 523
TRENCH 524
TRENCH 525
TRENCH 526
TRENCH 527
TRENCH 528
TRENCH 529
TRENCH 530
TRENCH 531
TRENCH 532
TRENCH 533
TRENCH 534
TRENCH 535
TRENCH 536
TRENCH 537
TRENCH 538
TRENCH 539
TRENCH 540
TRENCH 541
TRENCH 542
TRENCH 543
TRENCH 544
TRENCH 545
TRENCH 546
TRENCH 547
TRENCH 548
TRENCH 549
TRENCH 550
TRENCH 551
TRENCH 552
TRENCH 553
TRENCH 554
TRENCH 555
TRENCH 556
TRENCH 557
TRENCH 558
TRENCH 559
TRENCH 560
TRENCH 561
TRENCH 562
TRENCH 563
TRENCH 564
TRENCH 565
TRENCH 566
TRENCH 567
TRENCH 568
TRENCH 569
TRENCH 570
TRENCH 571
TRENCH 572
TRENCH 573
TRENCH 574
TRENCH 575
TRENCH 576
TRENCH 577
TRENCH 578
TRENCH 579
TRENCH 580
TRENCH 581
TRENCH 582
TRENCH 583
TRENCH 584
TRENCH 585
TRENCH 586
TRENCH 587
TRENCH 588
TRENCH 589
TRENCH 590
TRENCH 591
TRENCH 592
TRENCH 593
TRENCH 594
TRENCH 595
TRENCH 596
TRENCH 597
TRENCH 598
TRENCH 599
TRENCH 600
TRENCH 601
TRENCH 602
TRENCH 603
TRENCH 604
TRENCH 605
TRENCH 606
TRENCH 607
TRENCH 608
TRENCH 609
TRENCH 610
TRENCH 611
TRENCH 612
TRENCH 613
TRENCH 614
TRENCH 615
TRENCH 616
TRENCH 617
TRENCH 618
TRENCH 619
TRENCH 620
TRENCH 621
TRENCH 622
TRENCH 623
TRENCH 624
TRENCH 625
TRENCH 626
TRENCH 627
TRENCH 628
TRENCH 629
TRENCH 630
TRENCH 631
TRENCH 632
TRENCH 633
TRENCH 634
TRENCH 635
TRENCH 636
TRENCH 637
TRENCH 638
TRENCH 639
TRENCH 640
TRENCH 641
TRENCH 642
TRENCH 643
TRENCH 644
TRENCH 645
TRENCH 646
TRENCH 647
TRENCH 648
TRENCH 649
TRENCH 650
TRENCH 651
TRENCH 652
TRENCH 653
TRENCH 654
TRENCH 655
TRENCH 656
TRENCH 657
TRENCH 658
TRENCH 659
TRENCH 660
TRENCH 661
TRENCH 662
TRENCH 663
TRENCH 664
TRENCH 665
TRENCH 666
TRENCH 667
TRENCH 668
TRENCH 669
TRENCH 670
TRENCH 671
TRENCH 672
TRENCH 673
TRENCH 674
TRENCH 675
TRENCH 676
TRENCH 677
TRENCH 678
TRENCH 679
TRENCH 680
TRENCH 681
TRENCH 682
TRENCH 683
TRENCH 684
TRENCH 685
TRENCH 686
TRENCH 687
TRENCH 688
TRENCH 689
TRENCH 690
TRENCH 691
TRENCH 692
TRENCH 693
TRENCH 694
TRENCH 695
TRENCH 696
TRENCH 697
TRENCH 698
TRENCH 699
TRENCH 700
TRENCH 701
TRENCH 702
TRENCH 703
TRENCH 704
TRENCH 705
TRENCH 706
TRENCH 707
TRENCH 708
TRENCH 709
TRENCH 710
TRENCH 711
TRENCH 712
TRENCH 713
TRENCH 714
TRENCH 715
TRENCH 716
TRENCH 717
TRENCH 718
TRENCH 719
TRENCH 720
TRENCH 721
TRENCH 722
TRENCH 723
TRENCH 724
TRENCH 725
TRENCH 726
TRENCH 727
TRENCH 728
TRENCH 729
TRENCH 730
TRENCH 731
TRENCH 732
TRENCH 733
TRENCH 734
TRENCH 735
TRENCH 736
TRENCH 737
TRENCH 738
TRENCH 739
TRENCH 740
TRENCH 741
TRENCH 742
TRENCH 743
TRENCH 744
TRENCH 745
TRENCH 746
TRENCH 747
TRENCH 748
TRENCH 749
TRENCH 750
TRENCH 751
TRENCH 752
TRENCH 753
TRENCH 754
TRENCH 755
TRENCH 756
TRENCH 757
TRENCH 758
TRENCH 759
TRENCH 760
TRENCH 761
TRENCH 762
TRENCH 763
TRENCH 764
TRENCH 765
TRENCH 766
TRENCH 767
TRENCH 768
TRENCH 769
TRENCH 770
TRENCH 771
TRENCH 772
TRENCH 773
TRENCH 774
TRENCH 775
TRENCH 776
TRENCH 777
TRENCH 778
TRENCH 779
TRENCH 780
TRENCH 781
TRENCH 782
TRENCH 783
TRENCH 784
TRENCH 785
TRENCH 786
TRENCH 787
TRENCH 788
TRENCH 789
TRENCH 790
TRENCH 791
TRENCH 792
TRENCH 793
TRENCH 794
TRENCH 795
TRENCH 796
TRENCH 797
TRENCH 798
TRENCH 799
TRENCH 800
TRENCH 801
TRENCH 802
TRENCH 803
TRENCH 804
TRENCH 805
TRENCH 806
TRENCH 807
TRENCH 808
TRENCH 809
TRENCH 810
TRENCH 811
TRENCH 812
TRENCH 813
TRENCH 814
TRENCH 815
TRENCH 816
TRENCH 817
TRENCH 818
TRENCH 819
TRENCH 820
TRENCH 821
TRENCH 822
TRENCH 823
TRENCH 824
TRENCH 825
TRENCH 826
TRENCH 827
TRENCH 828
TRENCH 829
TRENCH 830
TRENCH 831
TRENCH 832
TRENCH 833
TRENCH 834
TRENCH 835
TRENCH 836
TRENCH 837
TRENCH 838
TRENCH 839
TRENCH 840
TRENCH 841
TRENCH 842
TRENCH 843
TRENCH 844
TRENCH 845
TRENCH 846
TRENCH 847
TRENCH 848
TRENCH 849
TRENCH 850
TRENCH 851
TRENCH 852
TRENCH 853
TRENCH 854
TRENCH 855
TRENCH 856
TRENCH 857
TRENCH 858
TRENCH 859
TRENCH 860
TRENCH 861
TRENCH 862
TRENCH 863
TRENCH 864
TRENCH 865
TRENCH 866
TRENCH 867
TRENCH 868
TRENCH 869
TRENCH 870
TRENCH 871
TRENCH 872
TRENCH 873
TRENCH 874
TRENCH 875
TRENCH 876
TRENCH 877
TRENCH 878
TRENCH 879
TRENCH 880
TRENCH 881
TRENCH 882
TRENCH 883
TRENCH 884
TRENCH 885
TRENCH 886
TRENCH 887
TRENCH 888
TRENCH 889
TRENCH 890
TRENCH 891
TRENCH 892
TRENCH 893
TRENCH 894
TRENCH 895
TRENCH 896
TRENCH 897
TRENCH 898
TRENCH 899
TRENCH 900
TRENCH 901
TRENCH 902
TRENCH 903
TRENCH 904
TRENCH 905
TRENCH 906
TRENCH 907
TRENCH 908
TRENCH 909
TRENCH 910
TRENCH 911
TRENCH 912
TRENCH 913
TRENCH 914
TRENCH 915
TRENCH 916
TRENCH 917
TRENCH 918
TRENCH 919
TRENCH 920
TRENCH 921
TRENCH 922
TRENCH 923
TRENCH 924
TRENCH 925
TRENCH 926
TRENCH 927
TRENCH 928
TRENCH 929
TRENCH 930
TRENCH 931
TRENCH 932
TRENCH 933
TRENCH 934
TRENCH 935
TRENCH 936
TRENCH 937
TRENCH 938
TRENCH 939
TRENCH 940
TRENCH 941
TRENCH 942
TRENCH 943
TRENCH 944
TRENCH 945
TRENCH 946
TRENCH 947
TRENCH 948
TRENCH 949
TRENCH 950
TRENCH 951
TRENCH 952
TRENCH 953
TRENCH 954
TRENCH 955
TRENCH 956
TRENCH 957
TRENCH 958
TRENCH 959
TRENCH 960
TRENCH 961
TRENCH 962
TRENCH 963
TRENCH 964
TRENCH 965
TRENCH 966
TRENCH 967
TRENCH 968
TRENCH 969
TRENCH 970
TRENCH 971
TRENCH 972
TRENCH 973
TRENCH 974
TRENCH 975
TRENCH 976
TRENCH 977
TRENCH 978
TRENCH 979
TRENCH 980
TRENCH 981
TRENCH 982
TRENCH 983
TRENCH 984
TRENCH 985
TRENCH 986
TRENCH 987
TRENCH 988
TRENCH 989
TRENCH 990
TRENCH 991
TRENCH 992
TRENCH 993
TRENCH 994
TRENCH 995
TRENCH 996
TRENCH 997
TRENCH 998
TRENCH 999
TRENCH 1000

COLLECTION POND NO. 1 (D63.34.72)
COLLECTION POND NO. 2 (D14.14.0)
COLLECTION POND NO. 3 (D14.14.0)
EVAPORATION POND NO. 1 (D3.34.12)
EVAPORATION POND NO. 2 (D3.34.12)
CONTAINER STORAGE AREA (D3.34.12)
SUBCELL 14-1 (D80)
SUBCELL 14-2 (D80)
SUBCELL 14-3 (D80)
CELL 14 (D80)
SUBCELL 13-1 (D80)
SUBCELL 13-2 (D80)
SUBCELL 13-3 (D80)
SUBCELL 13-4 (D80)
SUBCELL 13-5 (D80)
SUBCELL 15-1
SUBCELL 15-2
CELL 15
(D80)
SUBCELL 15-3
SUBCELL 15-4
MAIN GATE
LONLY ROAD
SITE BOUNDARY
WASTE B

LEGEND

- 5/8" IRON PIN W/ ALUMINUM CAP
- POWER POLE
- FENCE LINE
- PROPERTY BOUNDARY
- UNIMPROVED ROAD
- PAVED ROAD
- NON UNIT BOUNDARY
- CULVERT
- DRAINAGE
- CARRIER PIPE
- POND WATER TRANSFER PIPE
- FACILITY KEY NUMBER
- LEACHATE PIPE W/FLOW
- DIRECTION OF TRAVEL
- OFF-SITE TRUCKS
- ON-SITE HEAVY DUTY TRACTOR/EQUIPMENT
- LIGHT DUTY TRUCKS
- HEAVY TRUCK ROUTES

FACILITY KEY AND PROCESS CODES

1 CONTAINER STORAGE PAD 4 (D81,D80)
2 COMPRESSOR/ACC BUILDING
3 SOIL/LEACHATE FACILITY OFFICE
4 SOIL/LEACHATE FACILITY (D81,D80)
5 PCB PROCESSING BUILDING
6 VEHICLE WASH FACILITY
7 TRANSFORMER
8 FIELD TECH/PPE BUILDING
9 STORAGE BUILDING
10 MAINTENANCE SHOP
11 RECONDITIONING BUILDING
12 LAB OFFICES
13 RECEIVING OFFICE/LAB
14 PAD 4 OFFICE
15 FUEL STORAGE TANKS/FUELING STATION
16 CONTAINER BUILDING (D80,D81,D84)
17 PUMP HOUSE/WATER STORAGE TANKS
18 COMPRESSED GAS STORAGE AREA
19 ADMINISTRATIVE BUILDING
20 ADMINISTRATIVE/LUNCH ROOM
21 ADMINISTRATIVE BUILDING
22 RECEIVING STORAGE BUILDING
23 STORAGE STORAGE
24 "UNASSIGNED"
25 SECURITY BUILDING
26 PROPANE TANK
27 SHIPPING PLATFORM
28 STORAGE AREA
29 TRUCK SCALE
30 FLARE POLE
31 "UNASSIGNED"
32 DRUM & PCB STORAGE TANK COMPONENT
33 UNDERGROUND CLEAN WATER TANK
34 EXCAVATION SHED
35 NON STORAGE TANKS-4 UNITS (D80,D81)
36 CONTAINER STORAGE PAD 5 (D81,D80)
37 PAD 6-NON/PCB STORAGE BUILDING AREAS
38 "UNASSIGNED"
39 SOIL/LEACHATE BUILDING (D80,D81,D84)
40 BAG HOUSE
41 HIGH PRESSURE HOSE AND RIM
42 WASH TRUCK SCALE
43 CONTAINER STORAGE PAD 7 (D81,D84)
44 CONTAINERIZE BUILDING TRUCK UNLOADING AREAS 1,2 AND 3 (D81)
45 CONTAINERIZE BUILDING TRUCK UNLOADING BAYS
46 SOIL/LEACHATE BUILDING TRUCK UNLOADING AREAS 1 AND 2 (D81)
47 PROCESS PLANT PAD
48 LEACHATE DISTRIBUTION SYSTEM
49 SOIL/LEACHATE FACILITY ANCHORS BLOCK
50 SOIL/LEACHATE BUILDING ANCHORS BLOCK
51 EVAPORATION POND LOADING/UNLOADING AREA
52 OFFICE TRAILER SANITARY TANK
53 LAB WASTE HOLDING TANK
54 CONTAINER STORAGE
55 ET CAP TEST PAD

N
PLANT COORDINATE

REV.	BY	DATE	DESCRIPTION	PROJ.	QA/QC	DATE
F		3/14	PART B PERMIT RENEWAL			
E		3/13	CELL 16			
D		6/08	CELL 15 MODIFICATIONS			
C			NOVEMBER 2, 2006 PERMIT MOD			
B			USED RCRA PERMIT DATED NOVEMBER 12, 2004			
A		1/96	ISSUED FOR PART B PERMIT RENEWAL APPLICATION			

US ecology

SITE B
GRAND VIEW, IDAHO
US EPA ID NO. IDD 073 114 654

TITLE:
FACILITY
TYPICAL TRAFFIC PLAN
INTERIM CONDITIONS

DRAWN BY: MR DATE: 6/11/08 | SCALE: | FILE CODE: PRMI108 | REV. NO.
CHECKED: DATE | ENGINEER: DATE | DWG. NO. PRMI-108 | F
PROJ. MGR. DATE | APPROVED: DATE | PROJ. NO. PRM

DWG NO. PRM-109
PAGE NO.

N 89°41'49" E 658.53'
N 89°45'36" E 1321.99'

N 511500
N 511000
N 510500
N 510000
N 509500
N 509000
N 508500
N 508000

E 300000
E 301000
E 302000
E 303000
E 304000
E 305000
E 306000
E 307000
E 308000
E 309000

SUBCELL 16-2
SUBCELL 16-1

CELL 16
(DB0)

TRENCH 1A
TRENCH 1B
TRENCH 1C
TRENCH 1D
TRENCH 1E
TRENCH 1F
TRENCH 1G
TRENCH 1H
TRENCH 1I
TRENCH 1J
TRENCH 1K
TRENCH 1L
TRENCH 1M
TRENCH 1N
TRENCH 1O
TRENCH 1P
TRENCH 1Q
TRENCH 1R
TRENCH 1S
TRENCH 1T
TRENCH 1U
TRENCH 1V
TRENCH 1W
TRENCH 1X
TRENCH 1Y
TRENCH 1Z
TRENCH 1AA
TRENCH 1AB
TRENCH 1AC
TRENCH 1AD
TRENCH 1AE
TRENCH 1AF
TRENCH 1AG
TRENCH 1AH
TRENCH 1AI
TRENCH 1AJ
TRENCH 1AK
TRENCH 1AL
TRENCH 1AM
TRENCH 1AN
TRENCH 1AO
TRENCH 1AP
TRENCH 1AQ
TRENCH 1AR
TRENCH 1AS
TRENCH 1AT
TRENCH 1AU
TRENCH 1AV
TRENCH 1AW
TRENCH 1AX
TRENCH 1AY
TRENCH 1AZ
TRENCH 1BA
TRENCH 1BB
TRENCH 1BC
TRENCH 1BD
TRENCH 1BE
TRENCH 1BF
TRENCH 1BG
TRENCH 1BH
TRENCH 1BI
TRENCH 1BJ
TRENCH 1BK
TRENCH 1BL
TRENCH 1BM
TRENCH 1BN
TRENCH 1BO
TRENCH 1BP
TRENCH 1BQ
TRENCH 1BR
TRENCH 1BS
TRENCH 1BT
TRENCH 1BU
TRENCH 1BV
TRENCH 1BW
TRENCH 1BX
TRENCH 1BY
TRENCH 1BZ
TRENCH 1CA
TRENCH 1CB
TRENCH 1CC
TRENCH 1CD
TRENCH 1CE
TRENCH 1CF
TRENCH 1CG
TRENCH 1CH
TRENCH 1CI
TRENCH 1CJ
TRENCH 1CK
TRENCH 1CL
TRENCH 1CM
TRENCH 1CN
TRENCH 1CO
TRENCH 1CP
TRENCH 1CQ
TRENCH 1CR
TRENCH 1CS
TRENCH 1CT
TRENCH 1CU
TRENCH 1CV
TRENCH 1CW
TRENCH 1CX
TRENCH 1CY
TRENCH 1CZ
TRENCH 1DA
TRENCH 1DB
TRENCH 1DC
TRENCH 1DD
TRENCH 1DE
TRENCH 1DF
TRENCH 1DG
TRENCH 1DH
TRENCH 1DI
TRENCH 1DJ
TRENCH 1DK
TRENCH 1DL
TRENCH 1DM
TRENCH 1DN
TRENCH 1DO
TRENCH 1DP
TRENCH 1DQ
TRENCH 1DR
TRENCH 1DS
TRENCH 1DT
TRENCH 1DU
TRENCH 1DV
TRENCH 1DW
TRENCH 1DX
TRENCH 1DY
TRENCH 1DZ
TRENCH 1EA
TRENCH 1EB
TRENCH 1EC
TRENCH 1ED
TRENCH 1EE
TRENCH 1EF
TRENCH 1EG
TRENCH 1EH
TRENCH 1EI
TRENCH 1EJ
TRENCH 1EK
TRENCH 1EL
TRENCH 1EM
TRENCH 1EN
TRENCH 1EO
TRENCH 1EP
TRENCH 1EQ
TRENCH 1ER
TRENCH 1ES
TRENCH 1ET
TRENCH 1EU
TRENCH 1EV
TRENCH 1EW
TRENCH 1EX
TRENCH 1EY
TRENCH 1EZ
TRENCH 1FA
TRENCH 1FB
TRENCH 1FC
TRENCH 1FD
TRENCH 1FE
TRENCH 1FF
TRENCH 1FG
TRENCH 1FH
TRENCH 1FI
TRENCH 1FJ
TRENCH 1FK
TRENCH 1FL
TRENCH 1FM
TRENCH 1FN
TRENCH 1FO
TRENCH 1FP
TRENCH 1FQ
TRENCH 1FR
TRENCH 1FS
TRENCH 1FT
TRENCH 1FU
TRENCH 1FV
TRENCH 1FW
TRENCH 1FX
TRENCH 1FY
TRENCH 1FZ
TRENCH 1GA
TRENCH 1GB
TRENCH 1GC
TRENCH 1GD
TRENCH 1GE
TRENCH 1GF
TRENCH 1GG
TRENCH 1GH
TRENCH 1GI
TRENCH 1GJ
TRENCH 1GK
TRENCH 1GL
TRENCH 1GM
TRENCH 1GN
TRENCH 1GO
TRENCH 1GP
TRENCH 1GQ
TRENCH 1GR
TRENCH 1GS
TRENCH 1GT
TRENCH 1GU
TRENCH 1GV
TRENCH 1GW
TRENCH 1GX
TRENCH 1GY
TRENCH 1GZ
TRENCH 1HA
TRENCH 1HB
TRENCH 1HC
TRENCH 1HD
TRENCH 1HE
TRENCH 1HF
TRENCH 1HG
TRENCH 1HH
TRENCH 1HI
TRENCH 1HJ
TRENCH 1HK
TRENCH 1HL
TRENCH 1HM
TRENCH 1HN
TRENCH 1HO
TRENCH 1HP
TRENCH 1HQ
TRENCH 1HR
TRENCH 1HS
TRENCH 1HT
TRENCH 1HU
TRENCH 1HV
TRENCH 1HW
TRENCH 1HX
TRENCH 1HY
TRENCH 1HZ
TRENCH 1IA
TRENCH 1IB
TRENCH 1IC
TRENCH 1ID
TRENCH 1IE
TRENCH 1IF
TRENCH 1IG
TRENCH 1IH
TRENCH 1II
TRENCH 1IJ
TRENCH 1IK
TRENCH 1IL
TRENCH 1IM
TRENCH 1IN
TRENCH 1IO
TRENCH 1IP
TRENCH 1IQ
TRENCH 1IR
TRENCH 1IS
TRENCH 1IT
TRENCH 1IU
TRENCH 1IV
TRENCH 1IW
TRENCH 1IX
TRENCH 1IY
TRENCH 1IZ
TRENCH 1JA
TRENCH 1JB
TRENCH 1JC
TRENCH 1JD
TRENCH 1JE
TRENCH 1JF
TRENCH 1JG
TRENCH 1JH
TRENCH 1JI
TRENCH 1JJ
TRENCH 1JK
TRENCH 1JL
TRENCH 1JM
TRENCH 1JN
TRENCH 1JO
TRENCH 1JP
TRENCH 1JQ
TRENCH 1JR
TRENCH 1JS
TRENCH 1JT
TRENCH 1JU
TRENCH 1JV
TRENCH 1JW
TRENCH 1JX
TRENCH 1JY
TRENCH 1JZ
TRENCH 1KA
TRENCH 1KB
TRENCH 1KC
TRENCH 1KD
TRENCH 1KE
TRENCH 1KF
TRENCH 1KG
TRENCH 1KH
TRENCH 1KI
TRENCH 1KJ
TRENCH 1KK
TRENCH 1KL
TRENCH 1KM
TRENCH 1KN
TRENCH 1KO
TRENCH 1KP
TRENCH 1KQ
TRENCH 1KR
TRENCH 1KS
TRENCH 1KT
TRENCH 1KU
TRENCH 1KV
TRENCH 1KW
TRENCH 1KX
TRENCH 1KY
TRENCH 1KZ
TRENCH 1LA
TRENCH 1LB
TRENCH 1LC
TRENCH 1LD
TRENCH 1LE
TRENCH 1LF
TRENCH 1LG
TRENCH 1LH
TRENCH 1LI
TRENCH 1LJ
TRENCH 1LK
TRENCH 1LL
TRENCH 1LM
TRENCH 1LN
TRENCH 1LO
TRENCH 1LP
TRENCH 1LQ
TRENCH 1LR
TRENCH 1LS
TRENCH 1LT
TRENCH 1LU
TRENCH 1LV
TRENCH 1LW
TRENCH 1LX
TRENCH 1LY
TRENCH 1LZ
TRENCH 1MA
TRENCH 1MB
TRENCH 1MC
TRENCH 1MD
TRENCH 1ME
TRENCH 1MF
TRENCH 1MG
TRENCH 1MH
TRENCH 1MI
TRENCH 1MJ
TRENCH 1MK
TRENCH 1ML
TRENCH 1MM
TRENCH 1MN
TRENCH 1MO
TRENCH 1MP
TRENCH 1MQ
TRENCH 1MR
TRENCH 1MS
TRENCH 1MT
TRENCH 1MU
TRENCH 1MV
TRENCH 1MW
TRENCH 1MX
TRENCH 1MY
TRENCH 1MZ
TRENCH 1NA
TRENCH 1NB
TRENCH 1NC
TRENCH 1ND
TRENCH 1NE
TRENCH 1NF
TRENCH 1NG
TRENCH 1NH
TRENCH 1NI
TRENCH 1NJ
TRENCH 1NK
TRENCH 1NL
TRENCH 1NM
TRENCH 1NN
TRENCH 1NO
TRENCH 1NP
TRENCH 1NQ
TRENCH 1NR
TRENCH 1NS
TRENCH 1NT
TRENCH 1NU
TRENCH 1NV
TRENCH 1NW
TRENCH 1NX
TRENCH 1NY
TRENCH 1NZ
TRENCH 1OA
TRENCH 1OB
TRENCH 1OC
TRENCH 1OD
TRENCH 1OE
TRENCH 1OF
TRENCH 1OG
TRENCH 1OH
TRENCH 1OI
TRENCH 1OJ
TRENCH 1OK
TRENCH 1OL
TRENCH 1OM
TRENCH 1ON
TRENCH 1OO
TRENCH 1OP
TRENCH 1OQ
TRENCH 1OR
TRENCH 1OS
TRENCH 1OT
TRENCH 1OU
TRENCH 1OV
TRENCH 1OW
TRENCH 1OX
TRENCH 1OY
TRENCH 1OZ
TRENCH 1PA
TRENCH 1PB
TRENCH 1PC
TRENCH 1PD
TRENCH 1PE
TRENCH 1PF
TRENCH 1PG
TRENCH 1PH
TRENCH 1PI
TRENCH 1PJ
TRENCH 1PK
TRENCH 1PL
TRENCH 1PM
TRENCH 1PN
TRENCH 1PO
TRENCH 1PP
TRENCH 1PQ
TRENCH 1PR
TRENCH 1PS
TRENCH 1PT
TRENCH 1PU
TRENCH 1PV
TRENCH 1PW
TRENCH 1PX
TRENCH 1PY
TRENCH 1PZ
TRENCH 1QA
TRENCH 1QB
TRENCH 1QC
TRENCH 1QD
TRENCH 1QE
TRENCH 1QF
TRENCH 1QG
TRENCH 1QH
TRENCH 1QI
TRENCH 1QJ
TRENCH 1QK
TRENCH 1QL
TRENCH 1QM
TRENCH 1QN
TRENCH 1QO
TRENCH 1QP
TRENCH 1QQ
TRENCH 1QR
TRENCH 1QS
TRENCH 1QT
TRENCH 1QU
TRENCH 1QV
TRENCH 1QW
TRENCH 1QX
TRENCH 1QY
TRENCH 1QZ
TRENCH 1RA
TRENCH 1RB
TRENCH 1RC
TRENCH 1RD
TRENCH 1RE
TRENCH 1RF
TRENCH 1RG
TRENCH 1RH
TRENCH 1RI
TRENCH 1RJ
TRENCH 1RK
TRENCH 1RL
TRENCH 1RM
TRENCH 1RN
TRENCH 1RO
TRENCH 1RP
TRENCH 1RQ
TRENCH 1RR
TRENCH 1RS
TRENCH 1RT
TRENCH 1RU
TRENCH 1RV
TRENCH 1RW
TRENCH 1RX
TRENCH 1RY
TRENCH 1RZ
TRENCH 1SA
TRENCH 1SB
TRENCH 1SC
TRENCH 1SD
TRENCH 1SE
TRENCH 1SF
TRENCH 1SG
TRENCH 1SH
TRENCH 1SI
TRENCH 1SJ
TRENCH 1SK
TRENCH 1SL
TRENCH 1SM
TRENCH 1SN
TRENCH 1SO
TRENCH 1SP
TRENCH 1SQ
TRENCH 1SR
TRENCH 1SS
TRENCH 1ST
TRENCH 1SU
TRENCH 1SV
TRENCH 1SW
TRENCH 1SX
TRENCH 1SY
TRENCH 1SZ
TRENCH 1TA
TRENCH 1TB
TRENCH 1TC
TRENCH 1TD
TRENCH 1TE
TRENCH 1TF
TRENCH 1TG
TRENCH 1TH
TRENCH 1TI
TRENCH 1TJ
TRENCH 1TK
TRENCH 1TL
TRENCH 1TM
TRENCH 1TN
TRENCH 1TO
TRENCH 1TP
TRENCH 1TQ
TRENCH 1TR
TRENCH 1TS
TRENCH 1TT
TRENCH 1TU
TRENCH 1TV
TRENCH 1TW
TRENCH 1TX
TRENCH 1TY
TRENCH 1TZ
TRENCH 1UA
TRENCH 1UB
TRENCH 1UC
TRENCH 1UD
TRENCH 1UE
TRENCH 1UF
TRENCH 1UG
TRENCH 1UH
TRENCH 1UI
TRENCH 1UJ
TRENCH 1UK
TRENCH 1UL
TRENCH 1UM
TRENCH 1UN
TRENCH 1UO
TRENCH 1UP
TRENCH 1UQ
TRENCH 1UR
TRENCH 1US
TRENCH 1UT
TRENCH 1UU
TRENCH 1UV
TRENCH 1UW
TRENCH 1UX
TRENCH 1UY
TRENCH 1UZ
TRENCH 1VA
TRENCH 1VB
TRENCH 1VC
TRENCH 1VD
TRENCH 1VE
TRENCH 1VF
TRENCH 1VG
TRENCH 1VH
TRENCH 1VI
TRENCH 1VJ
TRENCH 1VK
TRENCH 1VL
TRENCH 1VM
TRENCH 1VN
TRENCH 1VO
TRENCH 1VP
TRENCH 1VQ
TRENCH 1VR
TRENCH 1VS
TRENCH 1VT
TRENCH 1VU
TRENCH 1VV
TRENCH 1VW
TRENCH 1VX
TRENCH 1VY
TRENCH 1VZ
TRENCH 1WA
TRENCH 1WB
TRENCH 1WC
TRENCH 1WD
TRENCH 1WE
TRENCH 1WF
TRENCH 1WG
TRENCH 1WH
TRENCH 1WI
TRENCH 1WJ
TRENCH 1WK
TRENCH 1WL
TRENCH 1WM
TRENCH 1WN
TRENCH 1WO
TRENCH 1WP
TRENCH 1WQ
TRENCH 1WR
TRENCH 1WS
TRENCH 1WT
TRENCH 1WU
TRENCH 1WV
TRENCH 1WW
TRENCH 1WX
TRENCH 1WY
TRENCH 1WZ
TRENCH 1XA
TRENCH 1XB
TRENCH 1XC
TRENCH 1XD
TRENCH 1XE
TRENCH 1XF
TRENCH 1XG
TRENCH 1XH
TRENCH 1XI
TRENCH 1XJ
TRENCH 1XK
TRENCH 1XL
TRENCH 1XM
TRENCH 1XN
TRENCH 1XO
TRENCH 1XP
TRENCH 1XQ
TRENCH 1XR
TRENCH 1XS
TRENCH 1XT
TRENCH 1XU
TRENCH 1XV
TRENCH 1XW
TRENCH 1XX
TRENCH 1XY
TRENCH 1XZ
TRENCH 1YA
TRENCH 1YB
TRENCH 1YC
TRENCH 1YD
TRENCH 1YE
TRENCH 1YF
TRENCH 1YG
TRENCH 1YH
TRENCH 1YI
TRENCH 1YJ
TRENCH 1YK
TRENCH 1YL
TRENCH 1YM
TRENCH 1YN
TRENCH 1YO
TRENCH 1YP
TRENCH 1YQ
TRENCH 1YR
TRENCH 1YS
TRENCH 1YT
TRENCH 1YU
TRENCH 1YV
TRENCH 1YW
TRENCH 1YX
TRENCH 1YY
TRENCH 1YZ
TRENCH 1ZA
TRENCH 1ZB
TRENCH 1ZC
TRENCH 1ZD
TRENCH 1ZE
TRENCH 1ZF
TRENCH 1ZG
TRENCH 1ZH
TRENCH 1ZI
TRENCH 1ZJ
TRENCH 1ZK
TRENCH 1ZL
TRENCH 1ZM
TRENCH 1ZN
TRENCH 1ZO
TRENCH 1ZP
TRENCH 1ZQ
TRENCH 1ZR
TRENCH 1ZS
TRENCH 1ZT
TRENCH 1ZU
TRENCH 1ZV
TRENCH 1ZW
TRENCH 1ZX
TRENCH 1ZY
TRENCH 1ZZ

CONTAINER STORAGE AREA 1
CONTAINER STORAGE AREA 2
CONTAINER STORAGE AREA 3
CONTAINER STORAGE AREA 4
CONTAINER STORAGE AREA 5
CONTAINER STORAGE AREA 6
CONTAINER STORAGE AREA 7
CONTAINER STORAGE AREA 8
CONTAINER STORAGE AREA 9
CONTAINER STORAGE AREA 10
CONTAINER STORAGE AREA

DWG. NO. PRM-T10
PROJ. NO. PRM

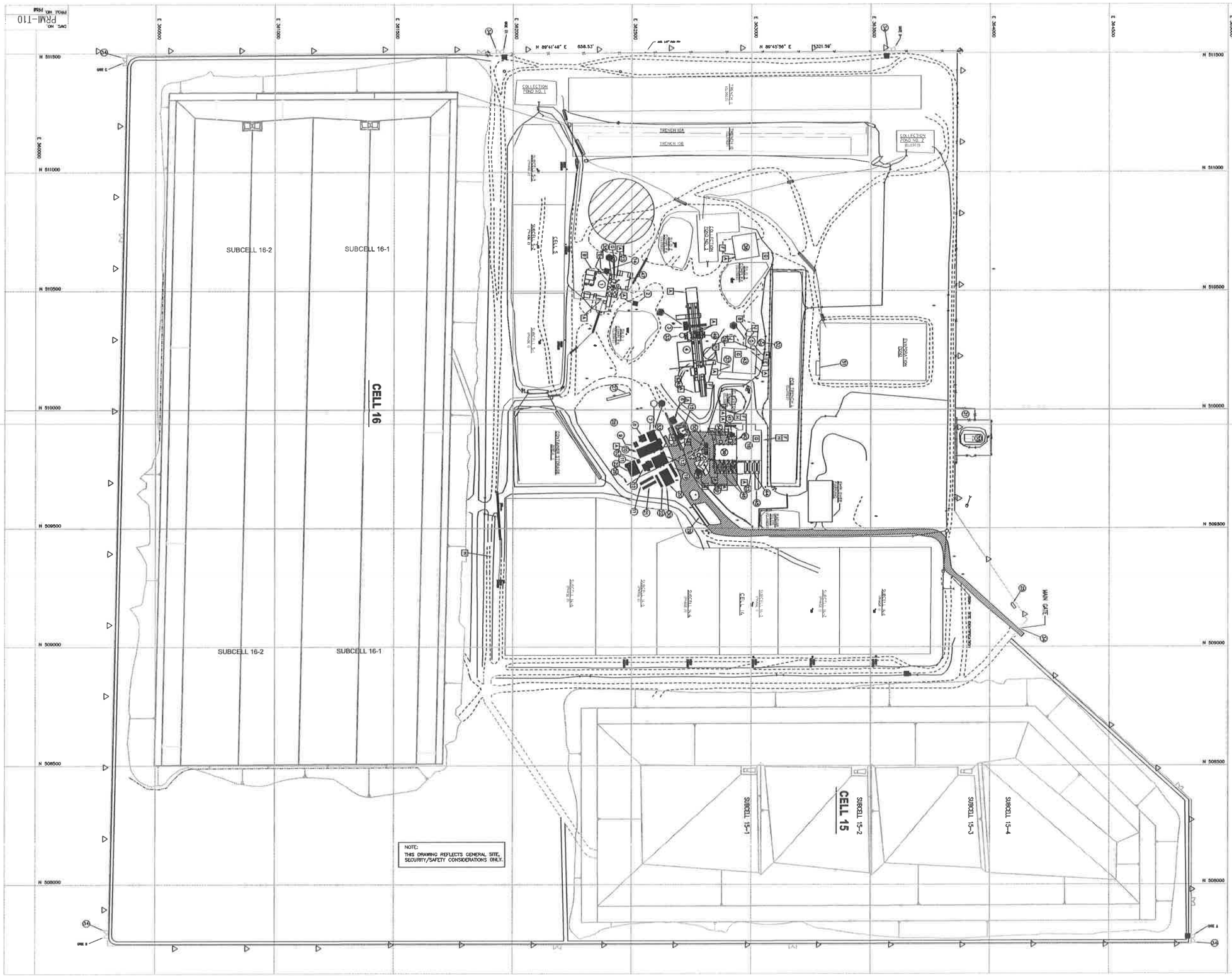

LEGEND

- 1/2" DIA. PIN W/ 1" ALUMINUM CAP
- POWER POLE
- POWER BOX
- SUSPENDED ROAD
- FENCE LINE
- PROPERTY BOUNDARY
- NON-SITE BOUNDARY
- CULVERT
- DRAINAGE
- CROSSED PIPE
- LEACHATE PIPE W/SLEEVE
- POND WATER TRANSFER PIPE
- FACILITY KEY MARKER
- POINTED SIGN – "AUTHORIZED PERSONNEL – KEEP OUT"
- METAL SIGN CONTAINING CONTAINERS TO CAGE
- WARNING SIGN "DANGER – NOTIFY SITE AGENT"
- WARNING SIGN "DO TRAINING VARIANCE ON OPEN LIBRARY"

FACILITY KEY

1 CONTAINER STORAGE PAD 1
2 CONTAINER/ACC BUILDING
3 DECONTAMINATION BUILDING OFFICE
4 DECONTAMINATION PAD 1
5 PCB FRACTIONATION BUILDING
6 TANKS TANK FACILITY
7 PACKAGING
8 FIELD TOOL/PCB STORAGE
9 STORAGE BUILDING
10 CONTAINERIZED SHOP
11 DECONTAMINATION BUILDING
12 LAB OFFICES
13 DECONTAMINATION OFFICE/LAB
14 PAD 4 OFFICE
15 FUEL STORAGE TANKS/BUILDING TANKS
16 CONTAINERIZED BUILDING
17 POND BUILDING/TANKS SUPPORT TANKS
18 CONTAINERIZED GAS STORAGE AREA
19 DECONTAMINATION BUILDING
20 DECONTAMINATION/LEACHATE TANKS
21 DECONTAMINATION BUILDING
22 DECONTAMINATION STORAGE BUILDING
23 DECONTAMINATION STORAGE
24 "DECONTAMINATION"
25 DECONTAMINATION STORAGE
26 PERIMETER TANK
27 DISPLAYS PLACARDS
28 DRAINAGE AREA
29 TRUCK WASH
30 FLAG POLE
31 TRAILER OFFICES
32 BUILD. & PCB STORAGE TANK CONTAINMENT
33 CONTAINERIZED CLOSE TANKS TANK
34 EXCLUSION GATES
35 DRUM STORAGE TANKS-1 TANKS
36 CONTAINER STORAGE PAD 2
37 PAD 6-DRUM/PCB STORAGE BUILDING AREAS
38 "DECONTAMINATION"
39 DECONTAMINATION BUILDING
40 DRY DRUMS
41 DRYS FLOOR DRAINS AND PAD
42 TRUCK TRACK SCALE
43 CONTAINER STORAGE PAD 3
44 CONTAINERIZED BUILDING TRUCK BUILDINGS
45 PAVED 1.2 ACR 2
46 CONTAINERIZED BUILDING TRUCK BUILDINGS TANK
47 DECONTAMINATION BUILDING TRUCK BUILDINGS
48 PAVED 1 ACR 1
49 PAVED PLANT PAD
50 LEACHATE DISPOSAL TANKS
51 DECONTAMINATION FACILITY DRAINAGE TRUCK
52 DECONTAMINATION BUILDING DRAINAGE TRUCK
53 CONTAINERIZED PAVED LOADING/DRAINAGE AREA
54 OFFICE BUILDING DRAINAGE TANK
55 LAB TRUCK BUILDING TANK
56 CONTROL TANKS
57 EX CAP TANK PAD

SAFETY EQUIPMENT KEY

A 25/50 LB PPE CONTAINERS
B 250 LB CONTAINERS
E 55 GAL DRY DRUMS
F DOT DRUMS DRAINAGE
G EMERGENCY EQUIPMENT LOCATIONS
H DRUMS/ DRUMS LIQUID
I DRUMS ONLY
J DRUMS EMERGENCY LIQUID

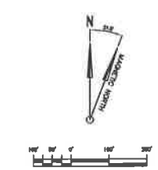

REV.	BY	DATE	DESCRIPTION	CHKD.	APPR.
F	MAT	5/14	PART B PERMIT RENEWAL		
E	MAT	5/10	CELL 16		
D	MAT	5/06	CELL 15 MODIFICATIONS		
C			NOVEMBER 2, 2006 PERMIT MOD		
B			USED RCRA PERMIT DATED NOVEMBER 13, 2004		
A	BB	3/06/06	ISSUED FOR PART B PERMIT RENEWAL APPLICATION		

US ecology

SITE B
GRAND VIEW, IDAHO
US EPA ID NO. IDD 073 114 654

TITLE:
FACILITY
TYPICAL COMMUNICATION AND EMERGENCY RESPONSE EQUIPMENT PLAN

DRAWN BY: MR DATE: 3/05/06 SCALE: FILE CODE: DWG. NO. PRM-T10 REV. NO. F
CHECKED DATE ENGINEER DATE
FINAL MOD. DATE APPROVED DATE FINAL NO. PRM

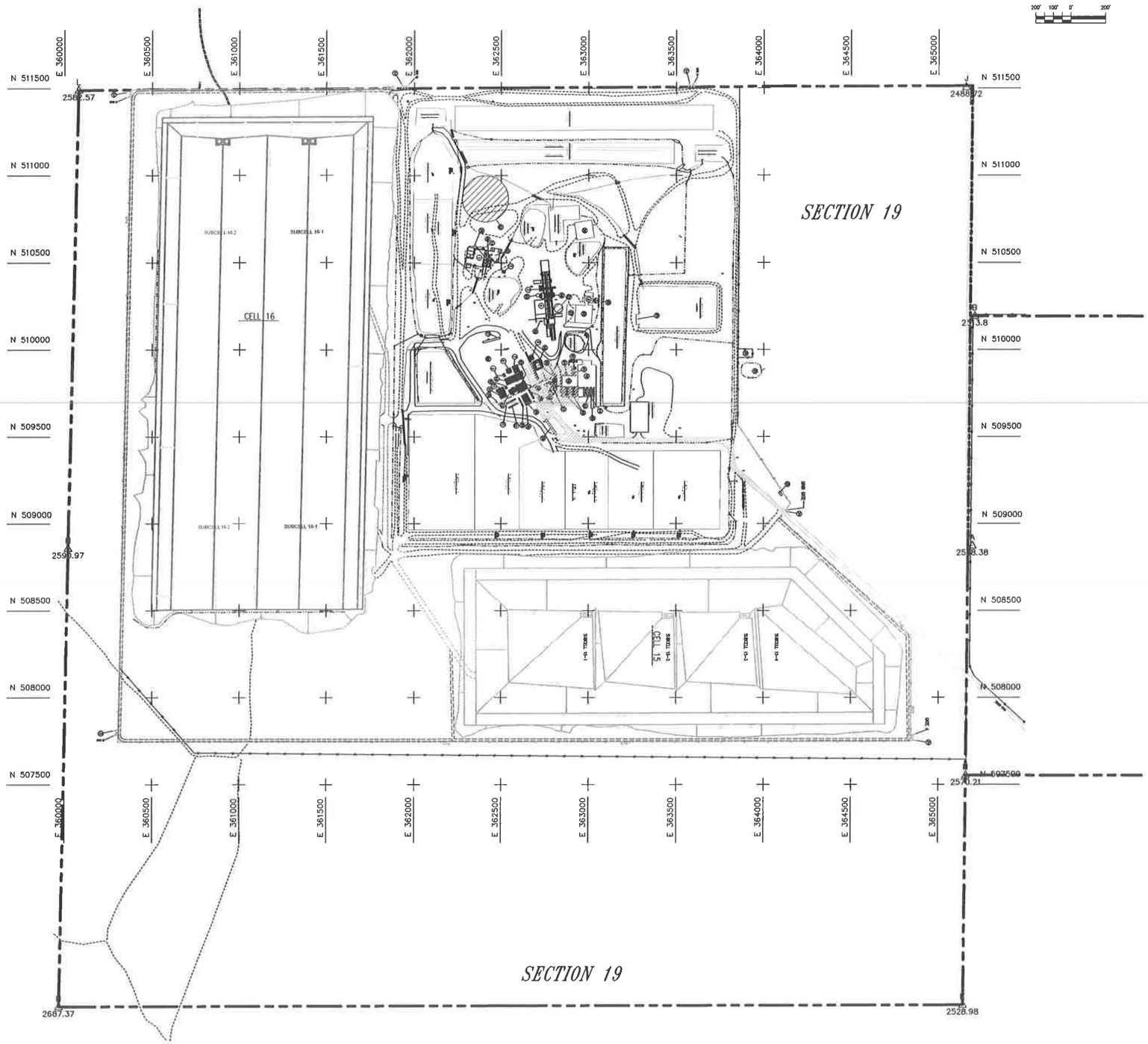

LEGEND

- 5/8" IRON PIN W/ ALUMINUM CAP
- POWER POLE
- FENCE LINE
- PROPERTY BOUNDARY
- UNIMPROVED ROAD
- PAVED ROAD
- RCRA UNIT BOUNDARY
- CULVERT
- DRAINAGE
- CARRIER PIPE
- POND WATER TRANSFER PIPE
- (54) FACILITY KEY NUMBER
- LEACHATE PIPE W/SLEEVE
- SAMPLE GRID LOCATION

FACILITY KEY

1 CONTAINER STORAGE PAD 4
2 COMPRESSOR/ACC BUILDING
3 STABILIZATION FACILITY OFFICE
4 STABILIZATION FACILITY
5 PCB PROCESSING BUILDING
6 VEHICLE WASH FACILITY
7 FIREHOUSE
8 FIELD TECH/PPE BUILDING
9 STORAGE BUILDING
10 MAINTENANCE SHOP
11 DECONTAMINATION BUILDING
12 LAB OFFICES
13 RECEIVING OFFICE/LAB
14 PAD 4 OFFICE
15 FUEL STORAGE TANKS/FUELING STATION
16 CONTAINMENT BUILDING
17 PUMP HOUSE/WATER STORAGE TANKS
18 COMPRESSED GAS STORAGE AREA
19 ADMINISTRATION BUILDING
20 ADMINISTRATION/LUNCH ROOM
21 ADMINISTRATION BUILDING
22 RECORDS STORAGE BUILDING
23 REAGENT STORAGE
24 "UNASSIGNED"
25 SECURITY BUILDING
26 PROPANE TANK
27 SAMPLING PLATFORM
28 STAGING AREA
29 TRUCK SCALE
30 FLAG POLE
31 WEATHER STATION
32 DIESEL & PCB STORAGE TANK CONTAINMENT
33 UNDERGROUND CLEAN WATER TANK
34 EVACUATION GATES
35 RCRA STORAGE TANKS-4 UNITS
36 CONTAINER STORAGE PAD 5
37 PAD 8-RCRA/PCB STORAGE BUILDING APRON
38 "UNASSIGNED"
39 STABILIZATION BUILDING
40 BAG HOUSE
41 HEPA FILTER HOUSE AND TNH
42 YARD TRUCK SCALE
43 CONTAINER STORAGE PAD 7
44 CONTAINMENT BUILDING TRUCK UNLOADING APRONS 1,2 AND 3
45 CONTAINMENT BUILDING TRUCK UNLOADING RAMP
46 STABILIZATION BUILDING TRUCK UNLOADING APRONS 1 AND 2
47 PROCESS PLANT PAD
48 LEACHATE TREATMENT SYSTEM
49 STABILIZATION FACILITY ADDITIVE SILOS
50 STABILIZATION BUILDING ADDITIVE SILOS
51 EVAPORATION POND LOADING/UNLOADING AREA
52 OFFICE TRAILER SANITARY TANK
53 LAB RINSE HOLDING TANK
54 CONTROL HOUSE
55 ET CAP TEST PAD

GENERAL NOTES:

1. EXISTING SITE TOPOGRAPHY, PHYSICAL FEATURES AND DELINEATIONS OBTAINED FROM AERIAL PHOTOGRAPHY AND SURVEYED DATUM PROVIDED TO ENVIROSOURCE TECHNOLOGIES BY: J.J. HOWARD ENGINEERING-SURVEYING, 1675-A HILL ROAD, BOISE, IDAHO 83702. DATE OF ORIGINAL SURVEY – NOVEMBER 4, 1995.

2. ADDITIONALLY THE FOLLOWING AREAS OF THE SITE HAVE BEEN UPDATED AND INCORPORATED INTO THE EXISTING SITE PLAN AS FOLLOWS:

   A. AN ADDITIONAL 1,000 FEET TO THE NORTH OF SECTION 19 HAS BEEN SURVEYED AND INCORPORATED INTO THE EXISTING TOPOGRAPHY. SURVEY BY: J.J. HOWARD DATED FEBRUARY 20, 1998.

   B. STABILIZATION AND CONTAINMENT BUILDING UPDATED AS OF JANUARY 14, 1997. SURVEY BY: J.J. HOWARD. DESIGN CONTOURS BY: ENVIROSOURCE TECHNOLOGIES.

   C. PAD 4 PROCESS PLANT AREA UPDATED AS OF APRIL 15, 1998. SURVEY BY: J.J. HOWARD.

   D. LEACHATE FORCE MAIN AND SOIL STOCKPILE SURVEY UPDATED AS OF FEBRUARY 15, 1998. SURVEY BY: J.J. HOWARD.

   E. THE CURRENT TOP OF WASTE ELEVATIONS FOR CELL 5 AS OF JANUARY 2, 1998. SURVEY BY: J.J. HOWARD.

   F. THE CURRENT TOP OF WASTE ELEVATIONS FOR CELL 14 AS OF JANUARY 04, 2001. SURVEY BY: J.J. HOWARD.

   G. TOPOGRAPHY OF TRENCHES 10 AND 11 UPDATED AS OF SEPTEMBER 12, 2000. SURVEY BY: J.J. HOWARD.

   H. UPDATE OF CONTAINER STORAGE AREA NO. 1 TOPOGRAPHY AS OF JUNE 16, 1999. SURVEY BY: J.J. HOWARD.

   I. BORROW AREA TOPOGRAPHY UPDATED AS OF DECEMBER 12, 2000. SURVEY BY: J.J. HOWARD.

   J. WEST HAUL ROAD TOPOGRAPHY UPDATED AS OF DECEMBER 05, 2000. SURVEY BY: J.J. HOWARD.

   K. ET CAP TEST PAD TOPOGRAPHY UPDATED AS OF NOVEMBER 06, 2000. SURVEY BY: J.J. HOWARD.

REV.	BY DATE	CHK'D DATE	DESCRIPTION	PROJ. ENGR. DATE	PROJ. MGR. DATE
F	WT 1/14		PART B PERMIT RENEWAL		
E	WT 1/11		CELL 16		
D	WT 1/09		CELL 15 MODIFICATIONS		
C			NOV. 2 2006 PERMIT MOD		
B			USEI RCRA PERMIT DATED NOVEMBER 12, 2004		
A	BR 1/06/98		ISSUED FOR PART B PERMIT RENEWAL APPLICATION		

US ecology

SITE B
GRAND VIEW, IDAHO
US EPA ID NO. IDD 073 114 654

TITLE: FACILITY
TYPICAL SOIL SAMPLING PLAN

DRAWN BY: BR	DATE 2/02/98	SCALE: 1"=200'	FILE CODE	REV. NO.
CHECKED	DATE	ENGINEER	DATE	DWG. NO. PRMI-T11	F
PROJ. MGR.	DATE	APPROVED	DATE	PROJ. NO. FR94	

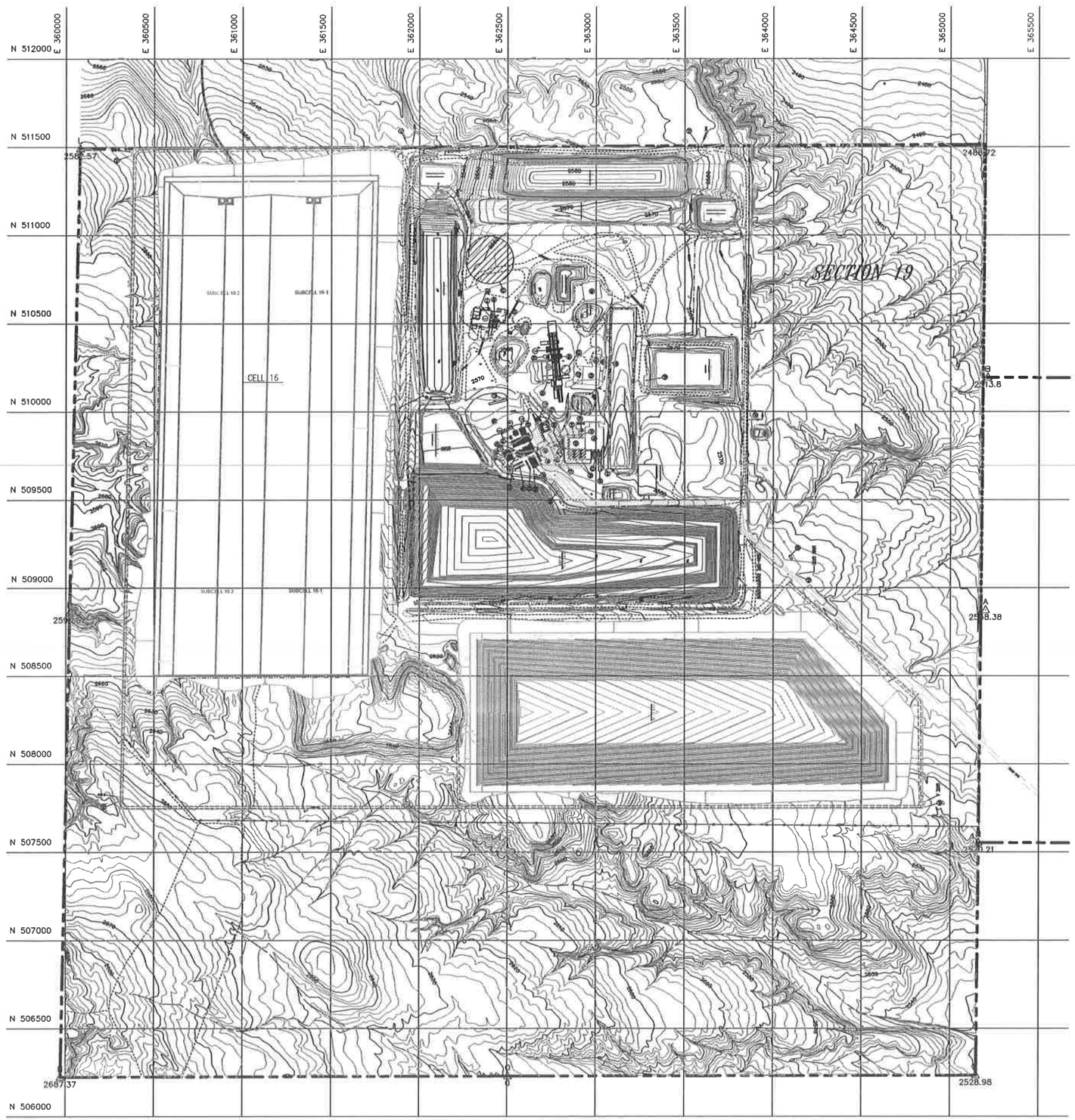

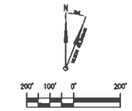

LEGEND

- 5/8" IRON PIN W/ ALUMINUM CAP
- POWER POLE
- FENCE LINE
- PROPERTY BOUNDARY
- UNIMPROVED ROAD
- PAVED ROAD
- EXISTING TOPOGRAPHY
- RCRA UNIT BOUNDARY
- CULVERT
- DRAINAGE
- CARRIER PIPE
- POND WATER TRANSFER PIPE
- (34) FACILITY KEY NUMBER
- LEACHATE PIPE W/SLEEVE

FACILITY KEY

1 CONTAINER STORAGE PAD 4
2 COMPRESSOR/NICE BUILDING
3 STABILIZATION FACILITY OFFICE
4 STABILIZATION FACILITY
5 PCB PROCESSING BUILDING
6 VEHICLE WASH FACILITY
7 FIREHOUSE
8 FIELD TOOL/PIPE STORAGE
9 STORAGE BUILDING
10 MAINTENANCE SHOP
11 DECONTAMINATION BUILDING
12 LAB OFFICES
13 RECEIVING OFFICE/LAB
14 PAD 4 OFFICE
15 FUEL STORAGE TANKS/FUELING STATION
16 CONTAINMENT BUILDING
17 PUMP HOUSE/WATER STORAGE TANKS
18 COMPRESSED GAS STORAGE AREA
19 ADMINISTRATION BUILDING
20 ADMINISTRATION/LUNCH ROOM
21 ADMINISTRATION BUILDING
22 RECORDS STORAGE BUILDING
23 RENDERE STORAGE
24 "UNASSIGNED"
25 SECURITY BUILDING
26 PROPANE TANK
27 SAMPLING PLATFORM
28 SCALING AREA
29 TRUCK SCALE
30 FLAG POLE
31 WEATHER STATION
32 DIESEL & PCB STORAGE TANK CONTAINMENT
33 UNDERGROUND CLEAN WATER TANK
34 EVACUATION GATES
35 RCRA STORAGE TANKS-4 UNITS
36 CONTAINER STORAGE PAD 5
37 PAD 6-RCRA/PCB STORAGE BUILDING APRON
38 "UNASSIGNED"
39 STABILIZATION BUILDING
40 BAG HOUSE
41 HEPA FILTER HOUSE AND FAN
42 "DRD TRUCK SCALE
43 CONTAINER STORAGE PAD 7
44 CONTAINMENT BUILDING TRUCK UNLOADING APRONS 1,2 AND 3
45 CONTAINMENT BUILDING TRUCK UNLOADING RAMP
46 STABILIZATION BUILDING TRUCK UNLOADING APRONS 1 AND 2
47 PROCESS PLANT PAD
48 LEACHATE TREATMENT SYSTEM
49 STABILIZATION FACILITY ADDITIVE SILOS
50 STABILIZATION BUILDING ADDITIVE SILOS
51 EVAPORATION POND LOADING/UNLOADING AREA
52 OFFICE TRAILER SANITARY TANK
53 LAB WASTE HOLDING TANK
54 CONTROL HOUSE
55 EZ CAP TEST PAD

GENERAL NOTES:

1. EXISTING SITE TOPOGRAPHY, PHYSICAL FEATURES AND DELINEATIONS OBTAINED FROM AERIAL PHOTOGRAPHY AND SURVEYED DATUM PROVIDED TO ENVIROSOURCE TECHNOLOGIES INC. J.J. HOWARD ENGINEERING-SURVEYING, 1475-A HILL ROAD, BOISE, IDAHO 83702. DATE OF ORIGINAL SURVEY – NOVEMBER 4, 1988.
2. ADDITIONALLY THE FOLLOWING AREAS OF THE SITE HAVE BEEN UPDATED AND INCORPORATED INTO THE EXISTING SITE PLAN AS FOLLOWS:
   - A. AN ADDITIONAL 1,000 FEET TO THE NORTH OF SECTION 19 HAS BEEN SURVEYED AND INCORPORATED INTO THE EXISTING TOPOGRAPHY. SURVEY BY: J.J. HOWARD DATED FEBRUARY 20, 1988.
   - B. STABILIZATION AND CONTAINMENT BUILDING UPDATED AS OF JANUARY 14, 1997. SURVEY BY: J.J. HOWARD. DESIGN CONTOURS BY: ENVIROSOURCE TECHNOLOGIES.
   - C. PAD 4 PROCESS PLANT AREA UPDATED AS OF APRIL 15, 1998. SURVEY BY: J.J. HOWARD.
   - D. LEACHATE FORCE MAIN AND SOIL STOCKPILE SURVEY UPDATED AS OF FEBRUARY 15, 1998. SURVEY BY: J.J. HOWARD.
   - E. THE CURRENT TOP OF WASTE ELEVATIONS FOR CELL 5 AS OF JANUARY 2, 1998. SURVEY BY: J.J. HOWARD.
   - F. THE CURRENT TOP OF WASTE ELEVATIONS FOR CELL 14 AS OF JANUARY 04, 2001. SURVEY BY: J.J. HOWARD.
   - G. TOPOGRAPHY OF TRENCHES 10 AND 11 UPDATED AS OF SEPTEMBER 12, 2000. SURVEY BY: J.J. HOWARD.
   - H. UPDATE OF CONTAINER STORAGE AREA NO. 1 TOPOGRAPHY AS OF JUNE 18, 1998. SURVEY BY: J.J. HOWARD.
   - I. BORROW AREA TOPOGRAPHY UPDATED AS OF DECEMBER 12, 2000. SURVEY BY: J.J. HOWARD.
   - J. WEST HAUL ROAD TOPOGRAPHY UPDATED AS OF DECEMBER 05, 2000. SURVEY BY: J.J. HOWARD.
   - K. EZ CAP TEST PAD TOPOGRAPHY UPDATED AS OF NOVEMBER 06, 2000. SURVEY BY: J.J. HOWARD.

REV.	BY DATE	CHK'D DATE	DESCRIPTION	PROJ MGR CHK DATE	DWG CHK DATE
F	WJT 3/1/18		PART B PERMIT RENEWAL		
E	WJT 11/11/		CELL 18		
D	WJT 1/08		CELL 15 MODIFICATIONS		
C			NOV. 2 2006 PERMIT MOD		
B			USEI RCRA PERMIT DATED NOVEMBER 12, 2004		
A	BE 1/19/98		ISSUED FOR PART B PERMIT RENEWAL APPLICATION		

US ecology

SITE B
GRAND VIEW, IDAHO
US EPA ID NO. IDD 073 114 654

TITLE:
FACILITY
TOPOGRAPHIC PLAN
INTERIM CONDITIONS

DRAWN BY:	DATE 2/20/98	SCALE: 1"=200'	FILE CODE		REV. NO.
MR			DWG. NO.		
CHECKED	DATE	ENGINEER DATE	PRMI-T12		F
PROJ. MGR.	DATE	APPROVED DATE	PROJ. NO. PRM		

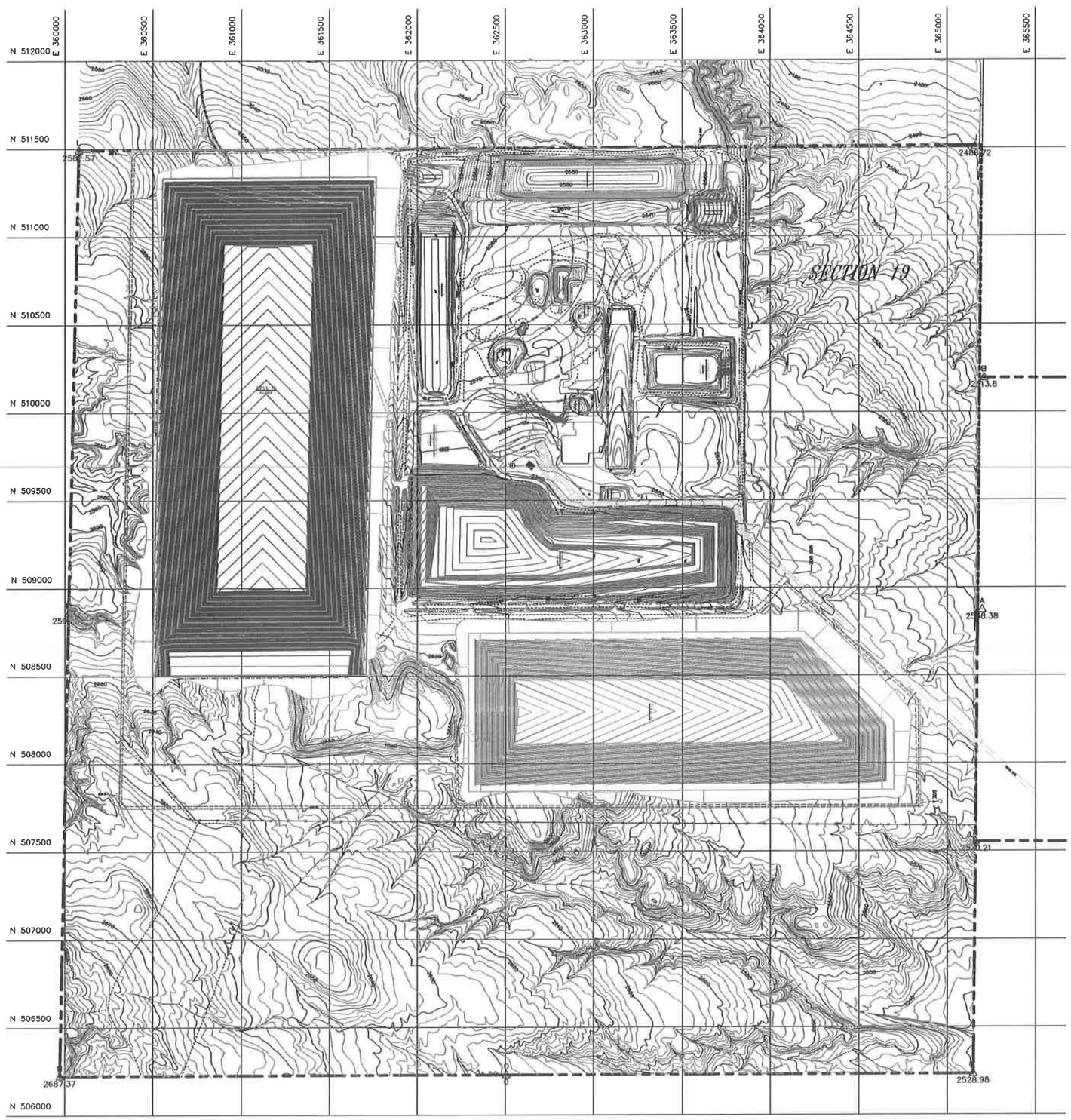

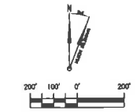

LEGEND

- 3/4" IRON PIN W/ ALUMINUM CAP
- POWER POLE
- (34) FACILITY KEY NUMBER
- FENCE LINE
- PROPERTY BOUNDARY
- UNIMPROVED ROAD
- PAVED ROAD
- EXISTING TOPOGRAPHY
- RCRA UNIT BOUNDARY
- DRAINAGE

FACILITY KEY

1 ADMINISTRATION/LUNCH ROOM

GENERAL NOTES:

1. EXISTING SITE TOPOGRAPHY, PHYSICAL FEATURES AND DELINEATIONS OBTAINED FROM AERIAL PHOTOGRAPHY AND SURVEYED DATA PROVIDED TO ENVIROSOURCE TECHNOLOGIES BY: J.J. HOWARD ENGINEERING-SURVEYING; 1675-A HILL ROAD; BOISE, IDAHO 83706. DATE OF ORIGINAL SURVEY – NOVEMBER 4, 1995.

2. ADDITIONALLY THE FOLLOWING AREAS OF THE SITE HAVE BEEN UPDATED AND INCORPORATED INTO THE EXISTING SITE PLAN AS FOLLOWS:

   A. AN ADDITIONAL 1,000 FEET TO THE NORTH OF SECTOR 19 HAS BEEN SURVEYED AND INCORPORATED INTO THE EXISTING TOPOGRAPHY. SURVEY BY: J.J. HOWARD DATED FEBRUARY 26, 1998.

   B. STABILIZATION AND CONTAINMENT BUILDING UPDATED AS OF JANUARY 14, 1997. SURVEY BY: J.J. HOWARD. DESIGN CONTOURS BY: ENVIROSOURCE TECHNOLOGIES.

   C. PAD 4 PROCESS PLANT AREA UPDATED AS OF APRIL 18, 1998. SURVEY BY: J.J. HOWARD.

   D. LEACHATE FORCE MAIN AND SOIL STOCKPILE SURVEY UPDATED AS OF FEBRUARY 18, 1999. SURVEY BY: J.J. HOWARD.

   E. THE CURRENT TOP OF WASTE ELEVATIONS FOR CELL 5 AS OF JANUARY 2, 1996. SURVEY BY: J.J. HOWARD.

   F. THE CURRENT TOP OF WASTE ELEVATIONS FOR CELL 14 AS OF JANUARY 04, 2001. SURVEY BY: J.J. HOWARD.

   G. TOPOGRAPHY OF TRENCHES 10 AND 11 UPDATED AS OF SEPTEMBER 12, 2000. SURVEY BY: J.J. HOWARD.

   H. UPDATE OF CONTAINER STORAGE AREA NO. 1 TOPOGRAPHY AS OF JUNE 18, 1998. SURVEY BY: J.J. HOWARD.

   I. BORROW AREA TOPOGRAPHY UPDATED AS OF DECEMBER 12, 2000. SURVEY BY: J.J. HOWARD.

   J. WEST HAUL ROAD TOPOGRAPHY UPDATED AS OF DECEMBER 05, 2000. SURVEY BY: J.J. HOWARD.

   K. EI CAP TEST PAD TOPOGRAPHY UPDATED AS OF NOVEMBER 06, 2000. SURVEY BY: J.J. HOWARD.

REV.	BY DATE	CHK'D DATE	DESCRIPTION	PROJ. ENGR. DATE	PROJ. MGR. DATE
F	MT 7/14		PART B PERMIT RENEWAL		
E	MT 7/11		CELL 16		
D	MT 1/08		CELL 15 MODIFICATIONS		
C			NOV. 2 2006 PERMIT MOD		
B			USEI RCRA PERMIT DATED NOVEMBER 12, 2004		
A	BB 1/04/96		ISSUED FOR PART B PERMIT RENEWAL APPLICATION		

US ecology

SITE B
GRAND VIEW, IDAHO
US EPA ID NO. IDD 073 114 654

TITLE:
FACILITY
TYPICAL TOPOGRAPHIC PLAN
FINAL AT CLOSURE

DRAWN BY: MT DATE: 7/09/98	SCALE: 1"=200'	FILE CODE: FRMAPAE		REV. NO.
CHECKED: DATE	ENGINEER: DATE	DWG. NO.: PRMI-T13		F
PROJ. MGR.: DATE	APPROVED: DATE	PROJ. NO.: PRMI		

Containment Building (Debris Area)

Drawing Number	Drawing Title	May 2014 USEI Permit Application Section Reference
773C-S01	Structural Containment Building (Debris Area) Typical Plan for Truck Ramp & Platform	D, I
773C-S02	Structural Containment Building (Debris Area) Typical Truck Platform Plan	D, I
773C-S03	Structural Containment Building (Debris Area) Typical Truck Platform - Sections and Details	D, I
773C-S04	Structural Containment Building (Debris Area) Typical Truck Ramp - Section and Details	D, I
D2020-A02	Architectural Containment Building (Debris Area) Floor Plan	C, D, I
D2020-A03	Architectural Containment Building (Debris Area) Miscellaneous Platform Plan	D, I
D2020-A04	Architectural Containment Building (Debris Area) Roof Plan	D, I
D2020-A05	Architectural Containment Building (Debris Area) Building Elevations - Sheet 1	D, I
D2020-A06	Architectual Containment Building (Debris Area) Building Elevations - Sheet 2	D, I
D2020-A07	Architectual Containment Building (Debris Area) Building Sections	D, I
D2020-C05	Civil - Containment Buildign (Debris Area) Liner Plan	D, I
D2020-C08	Civil - Containment Buildign (Debris Area) Trench Sections and Details	D, I
D2020-H01	Containment Building (Debris Area) Air Pollution Control System Section and Schematic	D, I
D2020-H03	Containment Building (Debris Area) Composite Duct System - Plan	D, I
D2020-H04	Air Pollution Control Equipment Containment Building (Debris Area) Mechanical Equipment Plan	D, I
D2020-P01	Process and Instrument Diagram Containment Building Complex (Debris Portion)	General Information
D2020-R02	General Arrangement Containment Building (Debris Area) Floor Plan	D, I
D2020-R05	General Arrangement Containment Building (Debris Area) Typical Details	D, I
D2020-R07	Equipment Arrangement Containment Building Sections	C, D, I
D2020-R08	Equipment Arrangement Containment Building Sections & Details	C, D, I

DWG. NO. 773C-S01
PROJ. NO.

REFERENCE DRAWINGS	
DWG. No.	TITLE
D2020-C03	CIVIL, GENERAL NOTES & LEGEND
D2020-S01	STRUCTURAL, GENERAL NOTES & LEGEND
773C-S02	STRUCTURAL, TRUCK PLATFORM PLAN
773C-S03	STRUCTURAL, TRUCK PLATFORM – SECTIONS & DET
773C-S04	STRUCTURAL, TRUCK RAMP – SECTIONS & DET

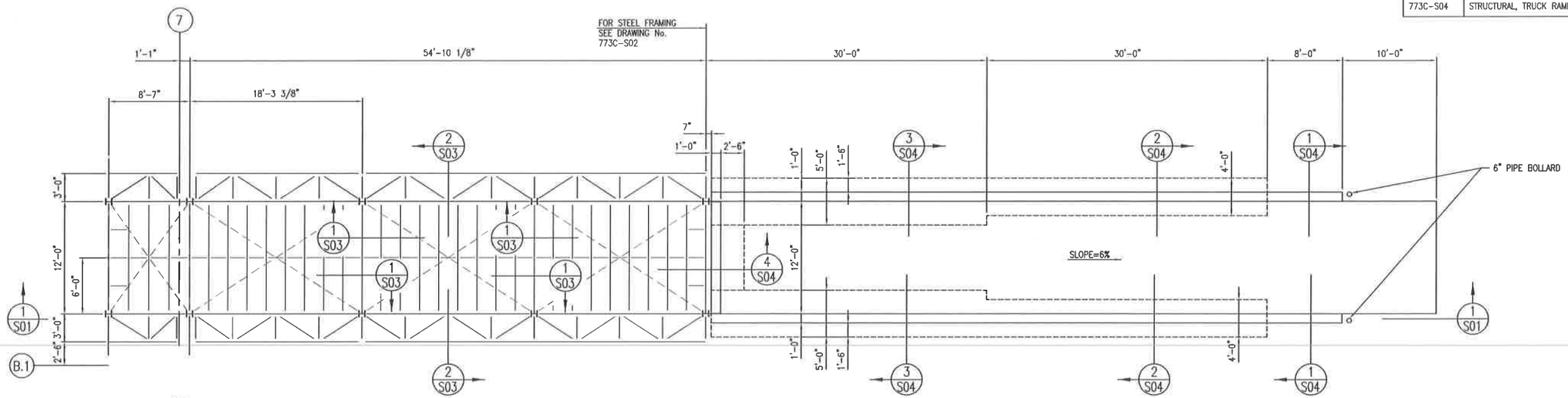

PLAN

TRUCK RAMP & PLATFORM

SCALE: 3/16"=1'-0"

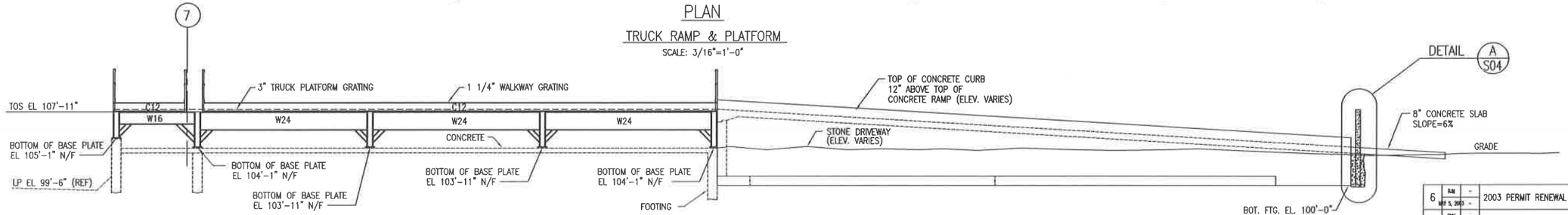

SECTION 1 S01

SCALE: 3/16"=1'-0"

4' 2' 0' 4' 8'

GRAPHIC SCALE

REV.	BY / DATE	CHK'D / DATE	DESCRIPTION	PROJ. ENGR / DATE	SUPV. ENGR / DATE
6	RJM / MAY 5, 2003	– / –	2003 PERMIT RENEWAL	– / –	JH / MAY 5, 2003
5	DMH / 7/26/96	– / –	ISSUED FOR B PERMIT RENEWAL APPLICATION	– / –	– / –
4	DBB / 4/29/96	PJS / 4/29/96	AS BUILT FOR COA PACKAGE	DL / 4/29/96	PJS / 4/29/96
3	DMH / 5/1/96	PJS / 5/6/96	REVISED DRAWING FOR MAY 1998 SUBMISSION TO IDEQ	DL / 5/8/96	PJS / 5/8/96
2	JZ / 1/28/97	MFP / 1/28/97	ESII PERMIT ISSUE	ARC / 1/28/97	DL / 1/28/97
1	JZ / 12/24/97	MFP / 12/24/97	"AS BUILT"	ARC / 12/24/97	DL / 12/24/97
0	JZ / 12/10/96	MFP / 12/10/96	ISSUED FOR CONSTRUCTION	ARC / 12/10/96	DL / 12/10/96
A	DBB / 8/13/96	MFP / 8/13/96	ISSUED FOR BIDDING	ARC / 8/13/96	DL / 8/13/96

USEcology Idaho
an American Ecology company

SITE B
GRAND VIEW, IDAHO
US EPA ID NO. IDD 073 114 654

TITLE:
STRUCTURAL
CONTAINMENT BUILDING (DEBRIS AREA)
TYPICAL PLAN FOR TRUCK RAMP & PLATFORM

DRAWN BY: DATE	SCALE:	FILE CODE A26S0016	REV. NO.
DBB 6/19/96		DWG. NO. 773C-S01	6
CHECKED DATE	ENGINEER DATE		
PROJ. MGR. DATE	APPROVED DATE	PROJ. NO.	

DWG. NO. 773C-S02
PROJ. NO.

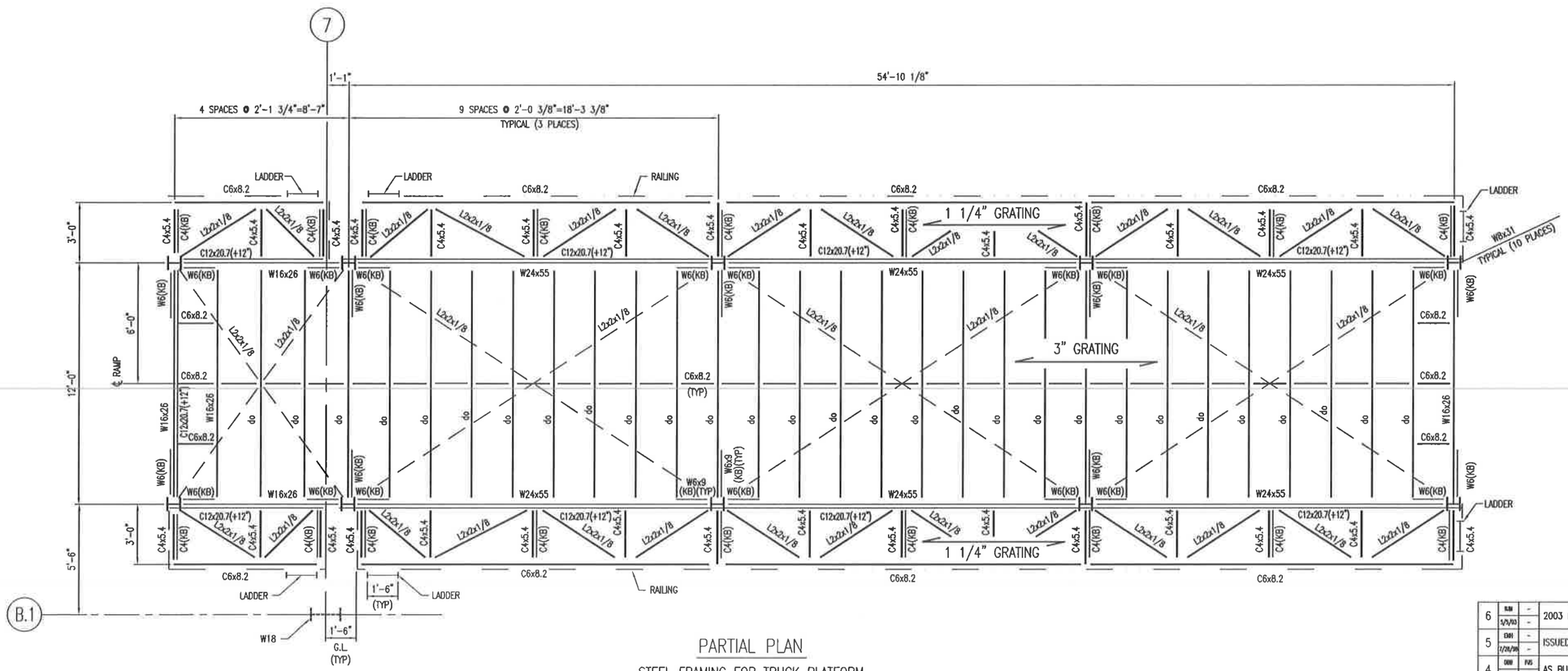

PARTIAL PLAN

STEEL FRAMING FOR TRUCK PLATFORM

TOS EL 107'-11"

a. DIAGONAL BRACING TOS WITHIN TRUCK PLATFORM AT BOTTOM OF BEAMS.

b. WALKWAY TOS EL AT +12".

c. BAR GRATING, TRUCK PLATFORM: 3"x1/4" BB @ 2 3/8" C TO C; CROSS BARS @ 2" C TO C.

d. GRATING FROM TRUCK PLATFORM TO BE SEATED ONTO EMBEDMENT IN ADJOINING RETAINING WALL.

e. BAR GRATING, WALKWAY: 1 1/4"x3/16" BB @ 1 3/16" C TO C; CROSS BARS @ 4" C TO C.

f. ALL MEASUREMENTS OF CHANNEL TO BE MADE TO THE OUTSIDE.

GRAPHIC SCALE

4' 2' 0' 4' 8'

REV.	BY / DATE	CHK'D / DATE	DESCRIPTION	PROJ ENGR / DATE	SUPV ENGR / DATE
6	RJM / 5/5/03	- / -	2003 PERMIT RENEWAL	- / -	JH / 5/5/03
5	DBH / 7/28/98	- / -	ISSUED FOR B PERMIT RENEWAL APPLICATION	- / -	- / -
4	DBB / 4/29/98	PJS / 4/29/98	AS BUILT FOR CQA PACKAGE	DL / 4/29/98	PJS / 4/29/98
3	DBH / 5/1/98	PJS / 5/8/98	REVISED DRAWING FOR MAY 1998 SUBMISSION TO IDEQ	DL / 5/8/98	PJS / 5/8/98
2	JZ / 1/28/97	MFP / 1/28/97	ESII PERMIT ISSUE	ARC / 1/28/97	DL / 1/28/97
1	JZ / 2/24/97	MFP / 2/24/97	"AS BUILT"	ARC / 2/24/97	DL / 2/24/97
0	JZ / 12/10/96	MFP / 12/10/96	ISSUED FOR CONSTRUCTION	ARC / 12/10/96	DL / 12/10/96
A	DBB / 9/13/96	MFP / 9/13/96	ISSUED FOR BIDDING	ARC / 9/13/96	DL / 9/13/96

USEcology Idaho
an American Ecology company

SITE B
GRAND VIEW, IDAHO
US EPA ID NO. IDD 073 114 654

TITLE: STRUCTURAL
CONTAINMENT BUILDING (DEBRIS AREA)
TYPICAL TRUCK PLATFORM PLAN

DRAWN BY: DBB	DATE 6/19/96	SCALE:	FILE CODE A26S0026	REV. NO.
CHECKED	DATE	ENGINEER	DATE	DWG. NO. 773C-S02	6
PROJ. MGR.	DATE	APPROVED	DATE	PROJ. NO.	

DWG. NO. 773C-S03
PROJ. NO.

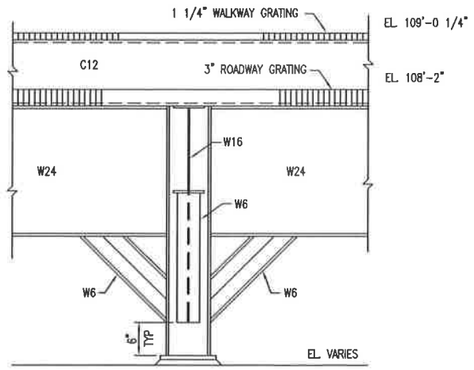

SECTION 1/S01
SCALE: 1"=1'-0"

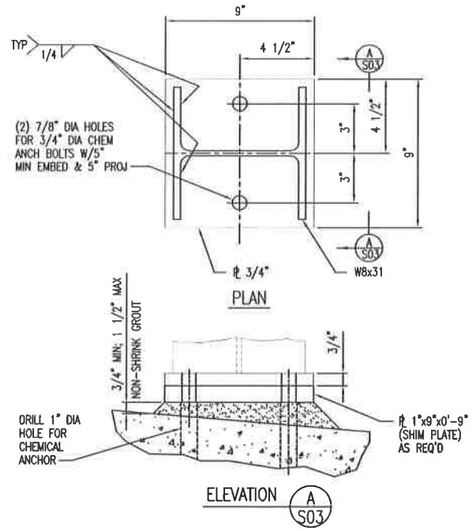

BASE PLATE DETAIL
TYP 10 PLACES

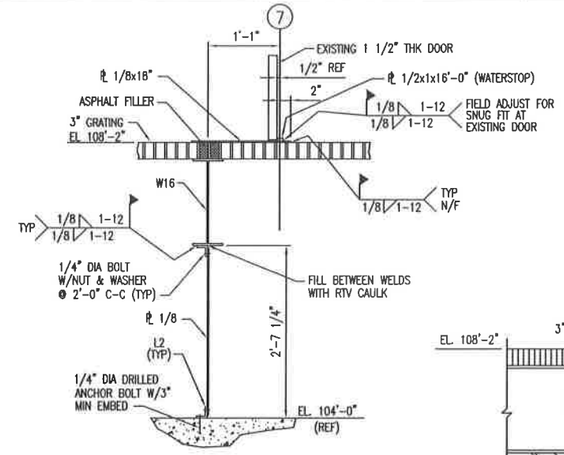

SECTION 4/S03
SCALE: 1"=1'-0"

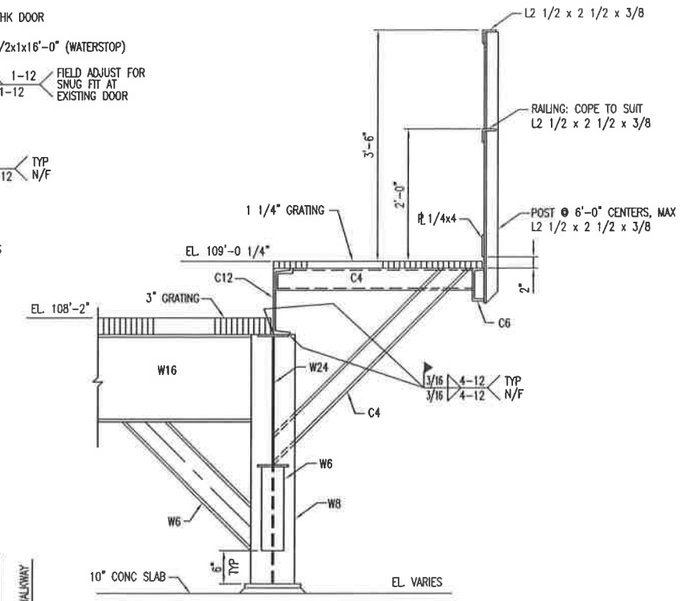

SECTION 2/S01
SCALE: 1"=1'-0"

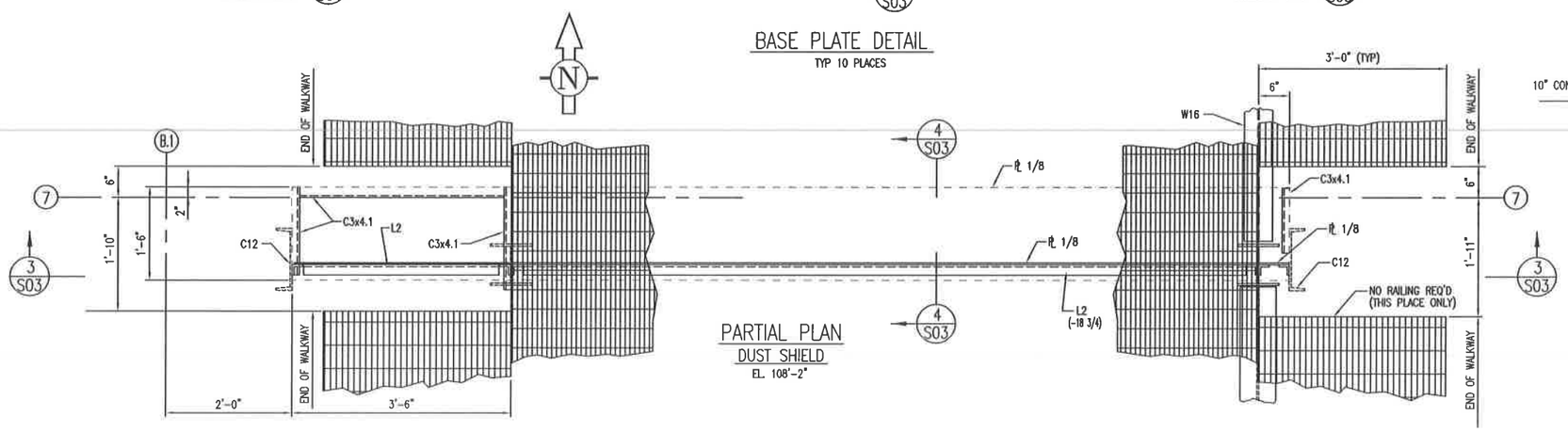

PARTIAL PLAN
DUST SHIELD
EL. 108'-2"

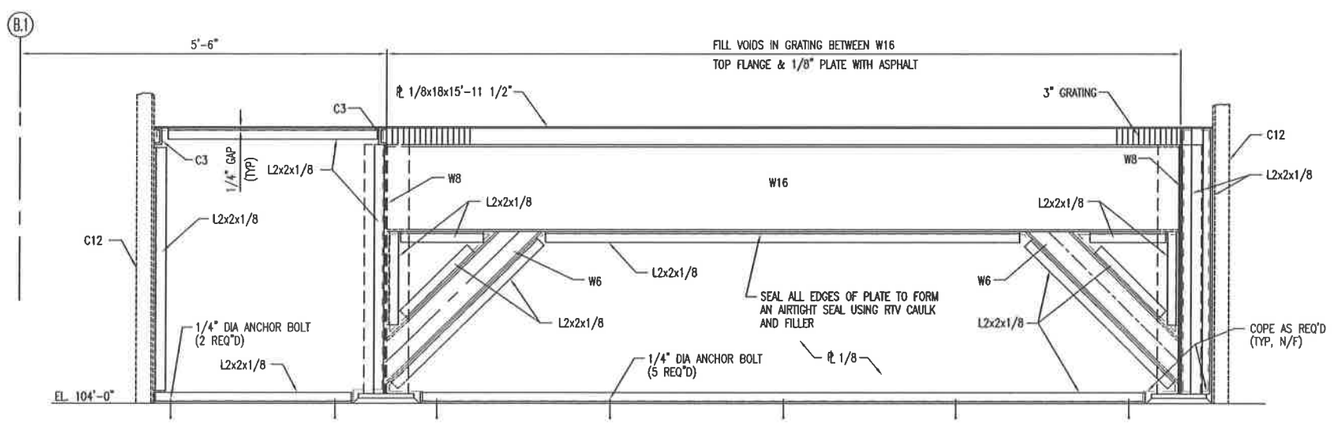

SECTION 3/S03
SCALE: 1"=1'-0"

4' 2' 0' 4' 8'
GRAPHIC SCALE

REV.	BY / DATE	CHK'D / DATE	DESCRIPTION	PROJ. ENGR / DATE	SUPV. ENGR / DATE
6	RJM / 5/3/03	- / -	2003 PERMIT RENEWAL	- / -	JH / 5/3/03
5	EMH / 1/28/98	- / -	ISSUED FOR B PERMIT RENEWAL APPLICATION	- / -	- / -
4	DBB / 4/29/96	PJS / 4/29/96	AS BUILT FOR CQA PACKAGE	DL / 4/29/96	PJS / 4/29/96
3	EMH / 5/1/98	PJS / 5/8/98	REVISED DRAWING FOR MAY 1998 SUBMISSION TO IDEQ	DL / 5/8/98	PJS / 5/8/98
2	JZ / 1/28/97	MFP / 1/28/97	ESII PERMIT ISSUE	AFC / 1/28/97	DL / 1/28/97
1	JZ / 1/28/97	MFP / 1/28/97	"AS BUILT"	AFC / 1/28/97	DL / 1/28/97
0	JZ / 12/10/96	MFP / 12/10/96	ISSUED FOR CONSTRUCTION	AFC / 12/10/96	DL / 12/10/96
A	DBB / 9/13/96	MFP / 9/13/96	ISSUED FOR BIDDING	AFC / 9/13/96	DL / 9/13/96

USEcology Idaho
an American Ecology company

SITE B
GRAND VIEW, IDAHO
US EPA ID NO. IDD 073 114 654

TITLE:
STRUCTURAL
CONTAINMENT BUILDING (DEBRIS AREA)
TYPICAL TRUCK PLATFORM – SECTIONS & DETAILS

DRAWN BY: DEB	DATE 6/19/96	SCALE:	FILE CODE A2650036	REV. NO.
CHECKED	DATE	ENGINEER DATE	DWG. NO. 773C-S03	6
PROJ. MGR.	DATE	APPROVED DATE	PROJ. NO.	

DWG. NO. 773C-S04
PROJ. NO.

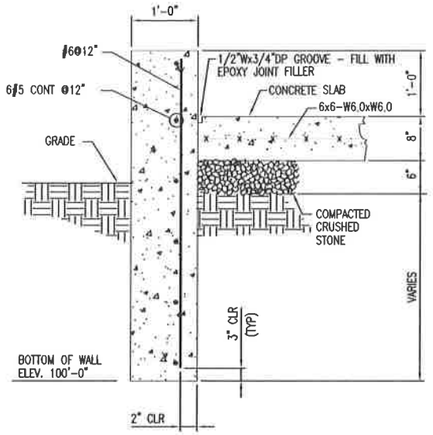

SECTION 1/S01
SCALE: 1"=1'-0"

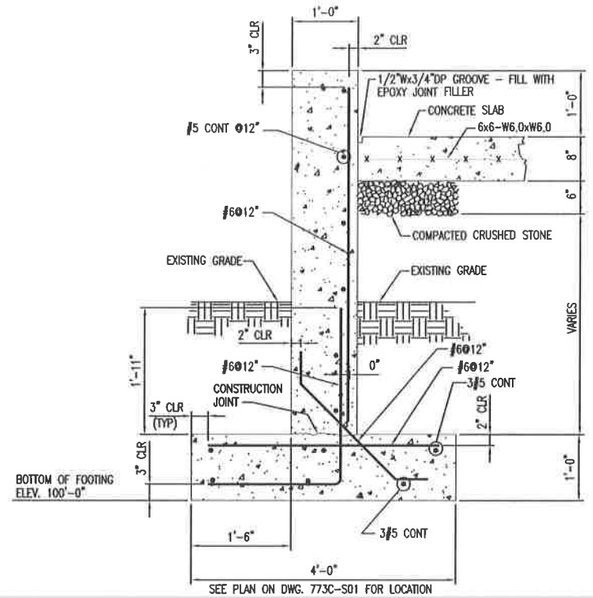

SECTION 2/S01
SCALE: 1"=1'-0"

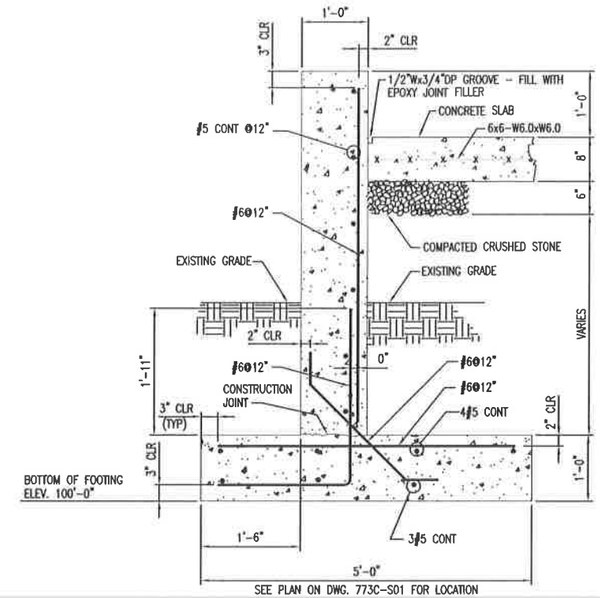

SECTION 3/S01
SCALE: 1"=1'-0"

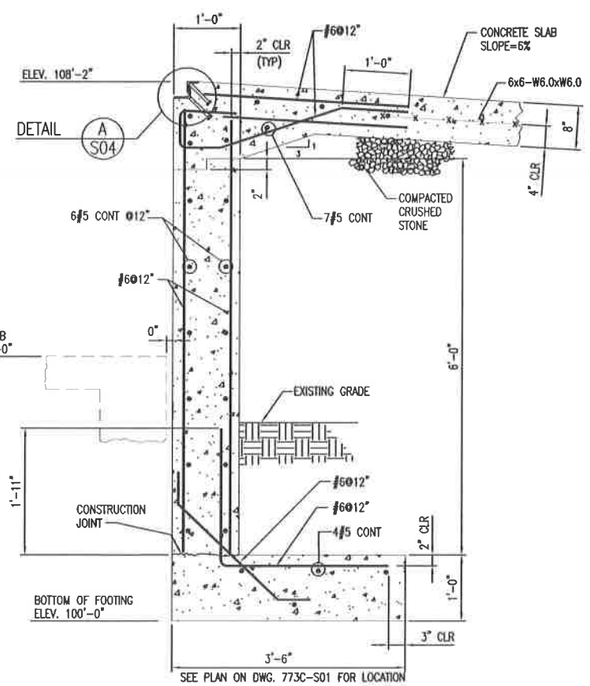

SECTION 4/S01
SCALE: 1"=1'-0"

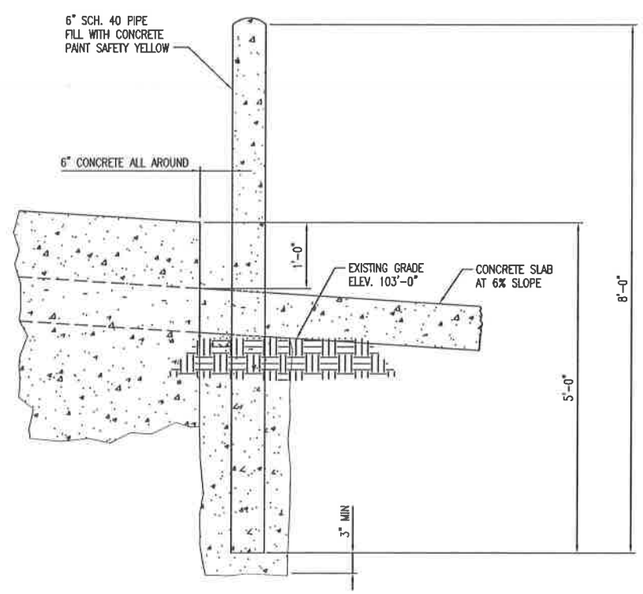

DETAIL A/S01
SCALE: 1"=1'-0"

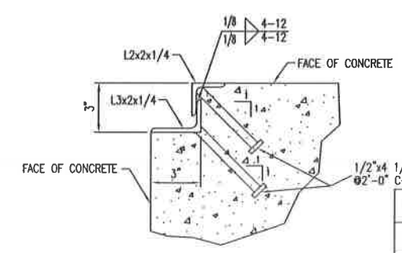

DETAIL A/S04
SCALE: 3"=1'-0"

GRAPHIC SCALE
4' 2' 0' 4' 8'

REV.	BY / DATE	CHK'D / DATE	DESCRIPTION	PROJ. ENGR. / DATE	SUPV. ENGR. / DATE
6	BJH / 5/5/03	- / -	2003 PERMIT RENEWAL	- / -	JH / 5/5/03
5	EMH / 7/26/98	- / -	ISSUED FOR B PERMIT RENEWAL APPLICATION	- / -	- / -
4	DBB / 4/29/98	PJG / 4/29/98	AS BUILT FOR CQA PACKAGE	CL / 4/29/98	PJG / 4/29/98
3	EMH / 5/1/98	PJG / 5/5/98	REVISED DRAWINGS FOR MAY 1998 SUBMISSION TO IDEQ	CL / 5/5/98	PJG / 5/5/98
2	JZ / 1/28/97	WFP / 1/28/97	ESII PERMIT ISSUE	ARC / 1/28/97	CL / 1/28/97
1	JZ / 2/24/97	WFP / 2/24/97	"AS BUILT"	ARC / 2/24/97	- / -
0	JZ / 12/16/96	WFP / 12/16/96	ISSUED FOR CONSTRUCTION	ARC / 12/16/96	CL / 12/16/96
A	DBB / 9/13/96	WFP / 9/13/96	ISSUED FOR BIDDING	ARC / 9/13/96	CL / 9/13/96

USEcology Idaho
an American Ecology company

SITE B
GRAND VIEW, IDAHO
US EPA ID NO. IDD 073 114 654

TITLE:
STRUCTURAL
CONTAINMENT BUILDING (DEBRIS AREA)
TYPICAL TRUCK RAMP - SECTIONS & DETAILS

DRAWN BY: DEB	DATE 6/19/96	SCALE:		FILE CODE A2650046	REV. NO.
CHECKED	DATE	ENGINEER	DATE	DWG. NO. 773C-S04	6
PROJ. MGR.	DATE	APPROVED	DATE	PROJ. NO.	

DWG. NO. D2020-A02
PROJ. NO. D2020

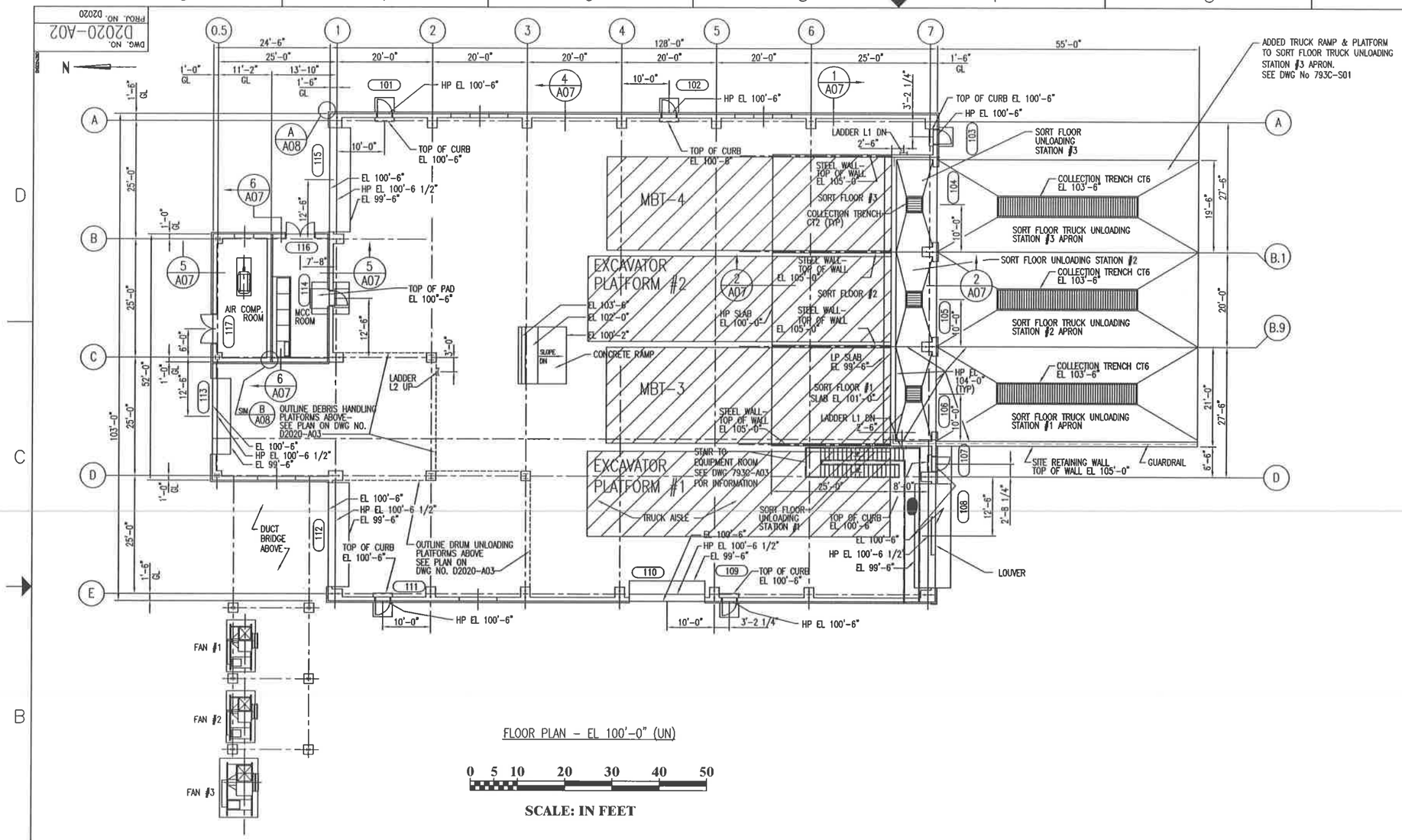

FLOOR PLAN – EL 100'-0" (UN)

0 5 10 20 30 40 50

SCALE: IN FEET

REFERENCE DRAWINGS

DWG NO.	TITLE
A01	GENERAL NOTES & LEGEND
A03	DHB – MISC PLATFORM PLANS
A04	DHB – ROOF PLANS
A05	DHB – BUILDING ELEVATIONS – SHEET 1
A06	DHB – BUILDING ELEVATIONS – SHEET 2
A07	DHB – BUILDING SECTIONS
A08	DHB – SECTIONS & DETAILS – SHEET 1
A09	DHB – SECTIONS & DETAILS – SHEET 2
A10	DOOR, WINDOW & ROOM FINISH SCHEDULE

REV.	BY	CHK'D	DATE	DESCRIPTION	PROJ ENGR	SUPV ENGR	DATE
13	HWB	–	02/2/06	NOVEMBER 6, 2006 PERMIT MODIFICATION	–	–	–
12	RJM	–	4/15/03	2003 PERMIT RENEWAL	–	JH	4/15/03
11	EMH	–	7/28/98	ISSUED FOR B PERMIT RENEWAL APPLICATION	–	–	–
10	EMH	PJS	6/29/98	AS BUILT FOR CQA PACKAGE	DL	PJS	6/29/98
9	JZ	PJS	5/1/98	REVISED DRAWING FOR MAY 1998 SUBMISSION TO IDEQ	DL	PJS	5/5/98
8	JZ	MFP	1/28/98	ESII PERMIT ISSUE	DL	DDC	1/28/98
7	TLZ	–	9/14/96	REVISED CONTAINMENT CURBS	–	–	–
6	DBB	–	–	ISSUED CQA	–	–	–
5	DCH	PJS	6/1/95	ISSUED FOR CONTAINMENT BUILDING PERMIT	–	PJS	6/1/95
4	CG	–	–	REVISED CURBS	–	–	–
3	AFN	–	–	AS BUILT	–	–	–
2	LAS	PJS	3/11/94	ADDED CRUSHER SYSTEM RESUBMIT TO IDEQ	DL	PJS	3/11/94
1	AFN	PJS	12/22/93	ADDED FANS, AIR COMP, MCC & LOUVERS, RELOCATED DOORS 117, 127, & 128	–	PJS	12/22/93
0	AFN	PJS	12/1/93	ISSUED FOR CONSTRUCTION	DL	PJS	12/1/93

USEcology Idaho
an American Ecology company

SITE B
GRAND VIEW, ID
US EPA ID NO. IDD 073 114 654

TITLE:
ARCHITECTURAL
CONTAINMENT BUILDING (DEBRIS AREA)
FLOOR PLAN

DRAWN BY: AFN DATE 7/20/93	SCALE: See Bar Scale	FILE CODE 932A10213	REV. NO.
CHECKED PJS DATE 12/1/93	ENGINEER PJS DATE 12/1/93	DWG. NO. D2020-A02	14
PROJ. MGR. DL DATE 12/1/93	APPROVED DATE	PROJ. NO. D2020	

DWG. NO. D2020-A03
PROJ. NO. D2020

N

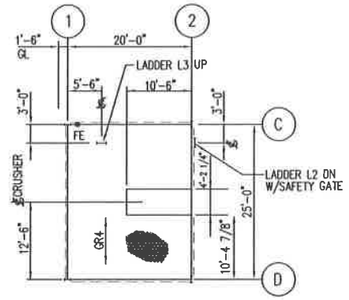

TOS EL 124'-6"

a. TOG EL 124'-6 5/8".

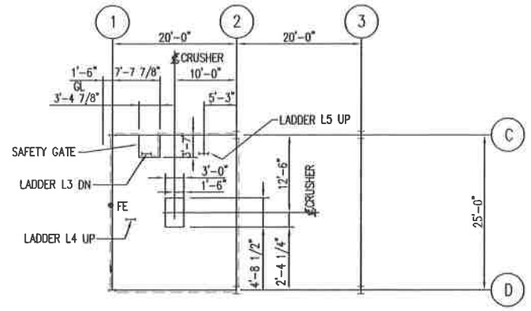

TOP OF SLAB EL 134'-0"

DEBRIS HANDLING PLATFORMS
SCALE: 3/32"=1'-0"

a. ALL HANDRAIL ANGLE TYPE.

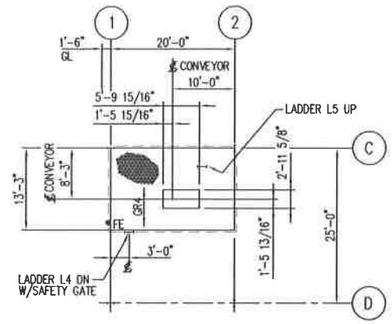

TOS EL 144'-0"

a. TOG EL 144'-0 5/8".

REFERENCE DRAWINGS

DWG NO.	TITLE
A01	GENERAL NOTES & LEGEND
A02	CONTAINMENT BLDG – FLOOR PLAN
A04	CONTAINMENT BLDG – ROOF PLANS
A05	CONTAINMENT BLDG – BUILDING ELEVATIONS – SHEET 1
A06	CONTAINMENT BLDG – BUILDING ELEVATIONS – SHEET 2
A07	CONTAINMENT BLDG – BUILDING SECTIONS
A08	CONTAINMENT BLDG – SECTIONS & DETAILS – SHEET 1
A09	CONTAINMENT BLDG – SECTIONS & DETAILS – SHEET 2
A10	DOOR, WINDOW & ROOM FINISH SCHEDULE

GRAPHIC SCALE:

8' 4' 0' 8' 16'

REV.	BY / DATE	CHK'D / DATE	DESCRIPTION	PROJ ENGR / DATE	SURV ENGR / DATE
4	BJM / 4/23/03	– / –	2003 PERMIT RENEWAL	– / –	JH / 4/23/03
3	EBH / 7/28/98	– / –	ISSUED FOR B PERMIT RENEWAL APPLICATION	– / –	– / –
2	APH / –	– / –	AS BUILT; DELETED DRUM PLATFORM	– / –	– / –
1	APH / 12/22/93	PJS / 12/22/93	REVISED DIMENSIONS @ EL 124'-6"; 134'-0" & 144'-0"; ADDED EL 132'-0"	– / –	PJS / 12/22/93
0	LJS / 12/1/93	PJS / 12/1/93	ISSUED FOR CONSTRUCTION	DL / 12/1/93	PJS / 12/1/93
A	DBB / 9/3/93	PJS / 9/3/93	ISSUED FOR BIDDING	DL / 9/3/93	PJS / 9/3/93

USEcology Idaho
an American Ecology company

SITE B
GRAND VIEW, IDAHO
US EPA ID NO. IDD 073 114 654

TITLE:
ARCHITECTURAL
CONTAINMENT BUILDING (DEBRIS AREA)
MISCELLANEOUS PLATFORM PLANS

DRAWN BY: DATE	SCALE:	FILE CODE 932A1034	REV. NO.
DBB 8/27/93		DWG. NO. D2020-A03	4
CHECKED DATE PJS 12/1/93	ENGINEER DATE PJS 12/1/93		
PROJ. MGR. DATE DL 12/1/93	APPROVED DATE	PROJ. NO. D2020	

DWG. NO. D2020-A04
PROJ. NO. D2020

N

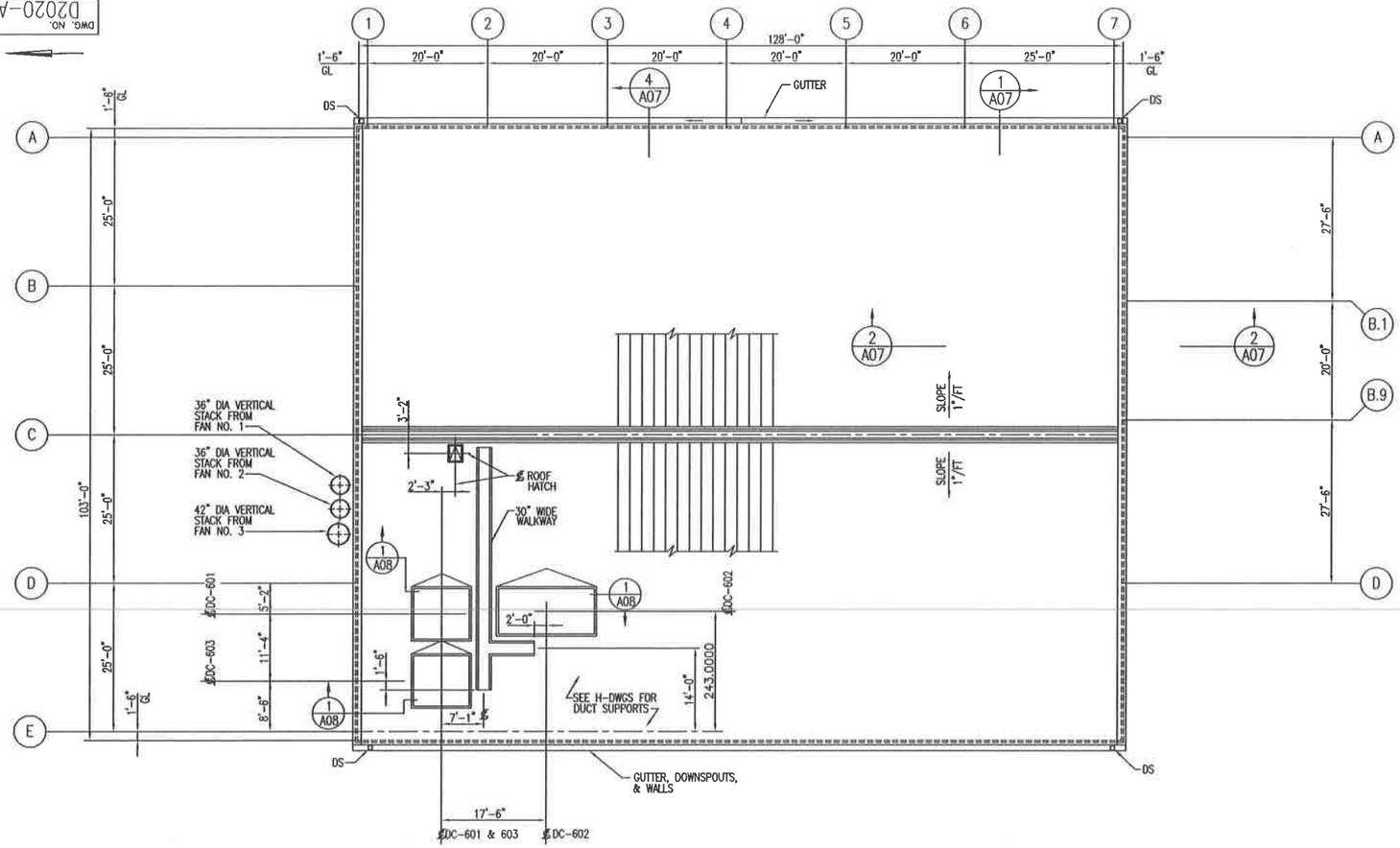

ROOF PLAN
SCALE: 3/32" = 1'-0"

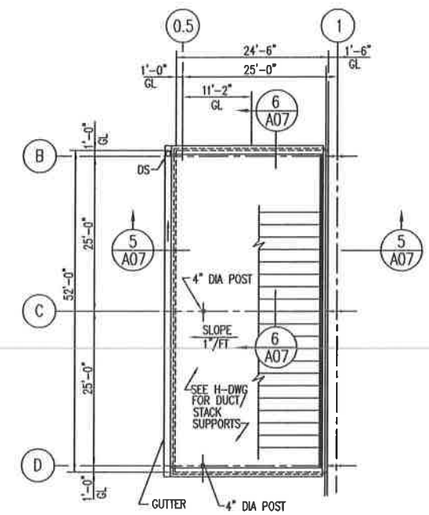

LOW ROOF PLAN
SCALE: 3/32" = 1'-0"

GRAPHIC SCALE:
8' 4' 0' 8' 16'

REFERENCE DRAWINGS	
DWG NO.	TITLE
A01	GENERAL NOTES & LEGEND
A02	DHB – FLOOR PLAN
A03	DHB – MISC PLATFORM PLANS
A05	DHB – BUILDING ELEVATIONS – SHEET 1
A06	DHB – BUILDING ELEVATIONS – SHEET 2
A07	DHB – BUILDING SECTIONS
A08	DHB – SECTIONS & DETAILS – SHEET 1
A09	DHB – SECTIONS & DETAILS – SHEET 2
A10	DOOR, WINDOW & ROOM FINISH SCHEDULE

REV.	BY / DATE	CHK'D / DATE	DESCRIPTION	PROJ. ENGR. / DATE	SUPV. ENGR. / DATE
8	BAM / 4/23/03	– / –	2003 PERMIT RENEWAL	– / –	JH / 4/23/03
7	EMH / 7/29/98	– / –	ISSUED FOR B PERMIT RENEWAL APPLICATION	– / –	– / –
6	EMH / 6/29/98	PJS / 6/29/98	AS BUILT FOR CQA PACKAGE	DL / 6/29/98	PJS / 6/29/98
5	EMH / 5/1/98	PJS / 5/8/98	REVISED DRAWING FOR MAY 1998 SUBMISSION TO IDEQ	DL / 5/8/98	PJS / 5/8/98
4	JZ / 3/28/97	MPP / 3/28/97	ISSUED FOR RECORD UPDATE	DL / 3/28/97	CDC / 3/28/97
3	DCH / 6/1/93	PJS / 6/1/93	ISSUED FOR CONTAINMENT BUILDING PERMIT	– / –	PJS / 6/1/93
2	AFH / –	– / –	AS BUILT; REVISED ROOF HATCH LOCATION	– / –	– / –
1	AFH / 12/22/93	PJS / 12/22/93	GENERAL REVISIONS	– / –	PJS / 12/22/93
0	LJS / 12/1/93	PJS / 12/1/93	ISSUED FOR CONSTRUCTION	DL / 12/1/93	PJS / 12/1/93
A	AFH / 9/3/93	PJS / 9/3/93	ISSUED FOR BIDDING	DL / 9/3/93	PJS / 9/3/93

USEcology Idaho
an American Ecology company

SITE B
GRAND VIEW, IDAHO
US EPA ID NO. IDD 073 114 654

TITLE: ARCHITECTURAL
CONTAINMENT BUILDING (DEBRIS AREA)
ROOF PLANS

DRAWN BY: DATE	SCALE:	FILE CODE 932A1048	REV. NO.
AFH 7/21/93		DWG. NO. D2020–A04	8
CHECKED DATE PJS 12/1/93	ENGINEER DATE PJS 12/1/93		
PROJ. MGR. DATE DL 12/1/93	APPROVED DATE	PROJ. NO. D2020	

DWG. NO. D2020-A05
PROJ. NO. D2020

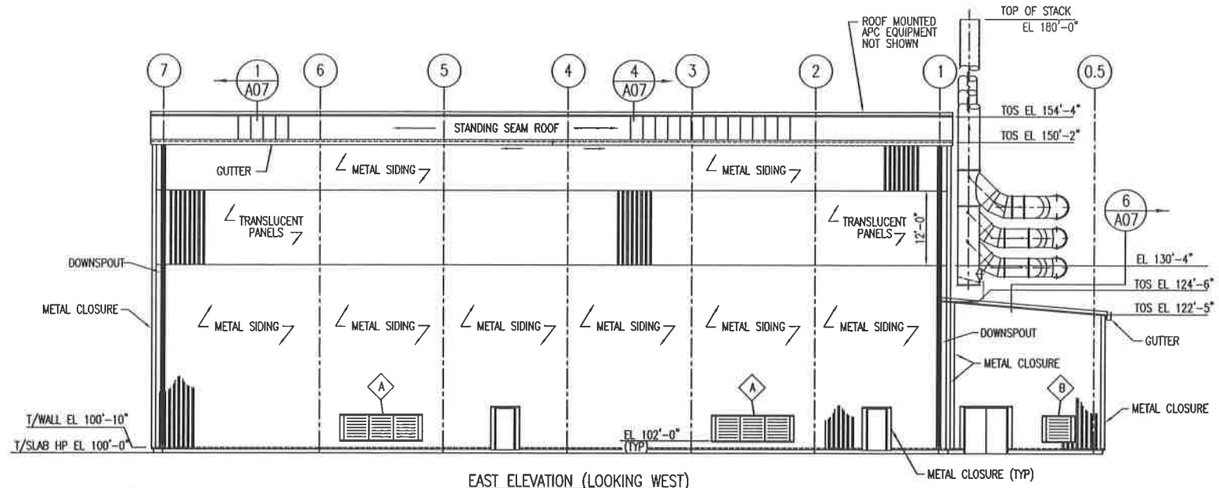

EAST ELEVATION (LOOKING WEST)
SCALE: 3/32" = 1'-0"

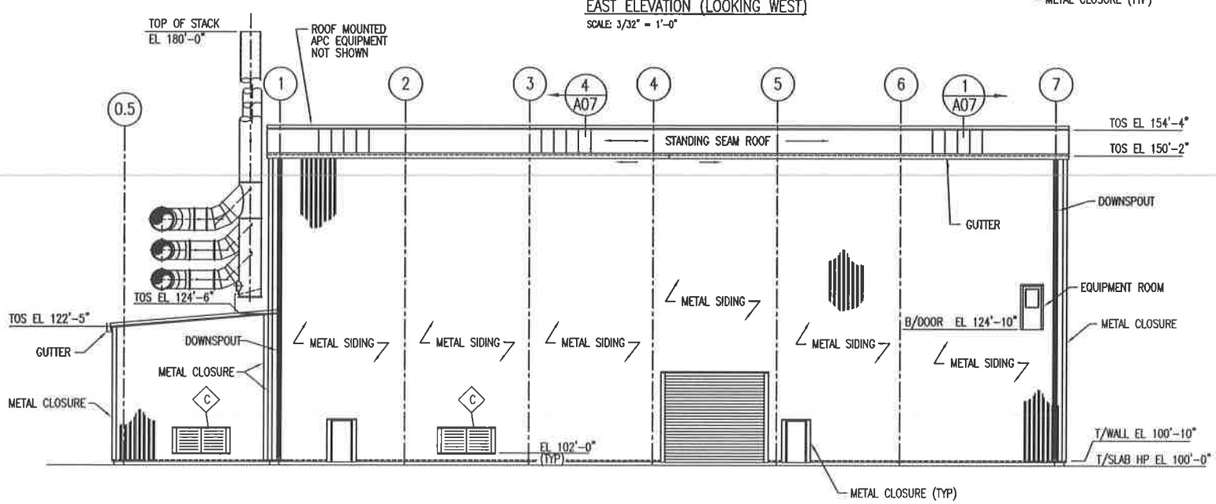

WEST ELEVATION (LOOKING EAST)
SCALE: 3/32" = 1'-0"

REFERENCE DRAWINGS

DWG NO.	TITLE
A01	GENERAL NOTES & LEGEND
A02	DHB – FLOOR PLAN
A03	DHB – MISC PLATFORM PLANS
A04	DHB – ROOF PLAN
A06	DHB – BUILDING ELEVATIONS – SHEET 2
A07	DHB – BUILDING SECTIONS
A08	DHB – SECTIONS & DETAILS – SHEET 1
A09	DHB – SECTIONS & DETAILS – SHEET 2
A10	DOOR, WINDOW & ROOM FINISH SCHEDULE

REV.	BY / DATE	CHK'D / DATE	DESCRIPTION	PROJ ENGR / DATE	SUPV ENGR / DATE
8	RJH / 4/23/03	– / –	2003 PERMIT RENEWAL	– / –	JH / 4/23/03
7	DMH / 7/29/98	– / –	ISSUED FOR B PERMIT RENEWAL APPLICATION	– / –	– / –
6	DMH / 4/29/98	PJS / 4/29/98	AS BUILT FOR CQA PACKAGE	DL / 4/29/98	PJS / 4/29/98
5	JZ / 5/1/98	PJS / 5/8/98	REVISED DRAWING FOR MAY 1998 SUBMISSION TO IDEQ	– / –	PJS / 5/8/98
4	JZ / 3/28/97	MFP / 3/28/97	ISSUED FOR RECORD UPDATE	DL / 3/28/97	PJS / 3/28/97
3	DCH / 8/1/95	8/1/95 / 8/1/95	ISSUED FOR CONTAINMENT BUILDING PERMIT	– / –	PJS / 8/1/95
2	AFN / –	– / –	AS BUILT	– / –	– / –
1	AFN / 12/22/93	PJS / 12/22/93	ADDED STACKS, REVISED LOCATION OF SECTION 4	– / –	PJS / 12/22/93
0	AFN / 12/1/93	PJS / 12/1/93	ISSUED FOR CONSTRUCTION	PJS / 12/1/93	PJS / 12/1/93
A	AFN / 9/3/93	PJS / 9/3/93	ISSUED FOR BIDDING	DL / 9/3/93	PJS / 9/3/93

USEcology Idaho
an American Ecology company

SITE B
GRAND VIEW, IDAHO
US EPA ID NO. IDD 073 114 654

GRAPHIC SCALE:
8' 4' 0' 8' 16'

TITLE:
ARCHITECTURAL
CONTAINMENT BUILDING (DEBRIS AREA)
BUILDING ELEVATIONS – SHEET 1

DRAWN BY: AFN DATE 7/22/93	SCALE:	FILE CODE 932A1058	REV. NO. 8
CHECKED PJS DATE 12/1/93	ENGINEER PJS DATE 12/1/93	DWG. NO. D2020-A05	
PROJ. MGR. DL DATE 12/1/93	APPROVED DL DATE 12/1/93	PROJ. NO. D2020	

DWG. NO. D2020-A06
PROJ. NO. D2020

REFERENCE DRAWINGS	
DWG NO.	TITLE
A01	GENERAL NOTES & LEGEND
A02	DHB – FLOOR PLAN
A03	DHB – MISC PLATFORM PLANS
A04	DHB – ROOF PLAN
A05	DHB – BUILDING ELEVATIONS – SHEET 1
A07	DHB – BUILDING SECTIONS
A08	DHB – SECTIONS & DETAILS – SHEET 1
A09	DHB – SECTIONS & DETAILS – SHEET 2
A10	DOOR, WINDOW & FINISH SCHEDULES

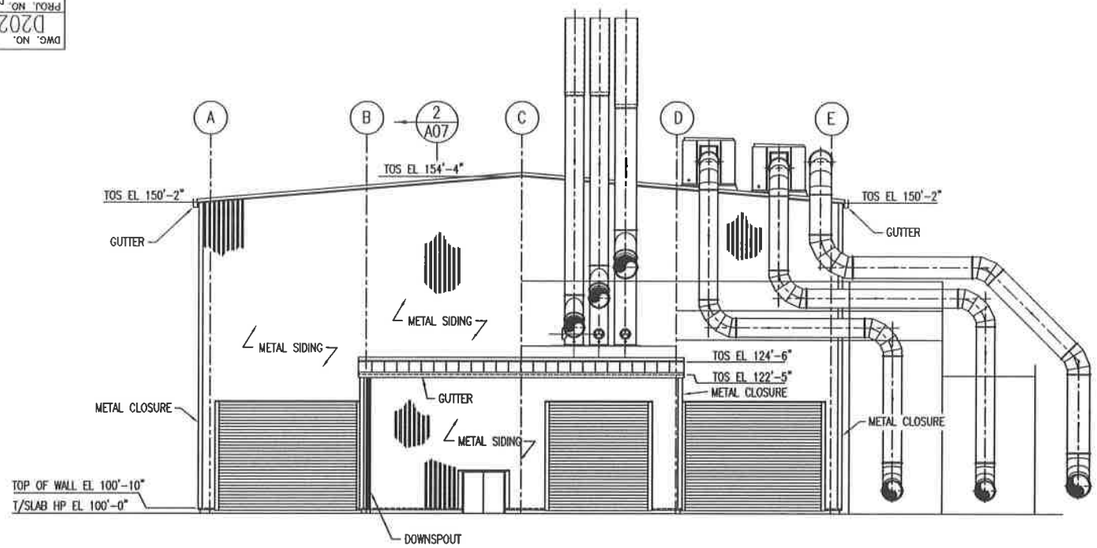

NORTH ELEVATION (LOOKING SOUTH)
SCALE: 3/32" = 1'-0"

WALL OPENING SCHEDULE			
OPENING MARK	SIZE WIDTH	SIZE HEIGHT	REMARKS
A	12'-0"	4'-0"	VENTILATION LOUVER
B	4'-0"	4'-0"	VENTILATION LOUVER
C	8'-0"	4'-0"	VENTILATION LOUVER

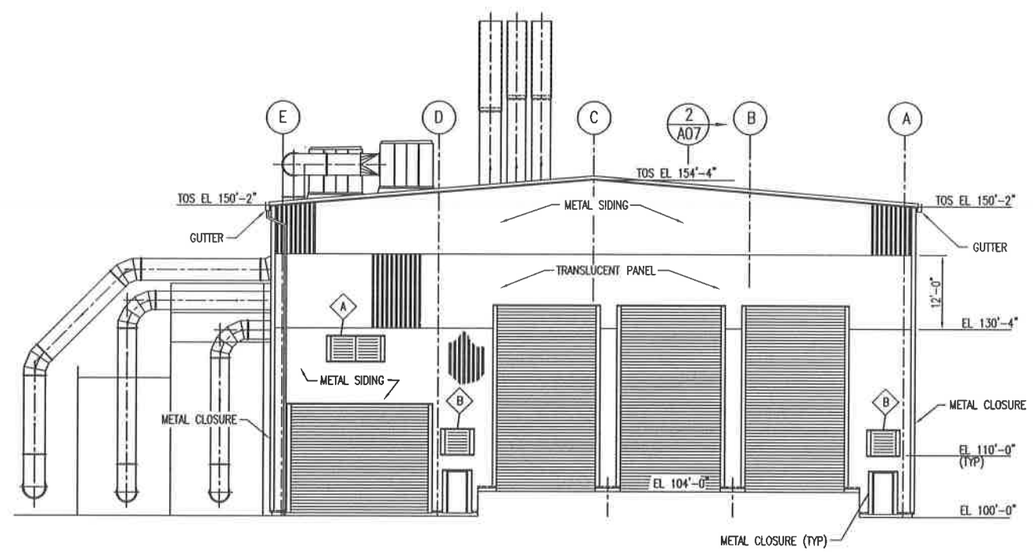

SOUTH ELEVATION (LOOKING NORTH)
SCALE: 3/32" = 1'-0"

GRAPHIC SCALE:
8' 4' 0' 8' 16'

REV.	BY / DATE	CHK'D / DATE	DESCRIPTION	PROJ. ENGR. / DATE	SUPV. ENGR. / DATE
8	RJM / 4/23/03	– / –	2003 PERMIT RENEWAL	– / –	JH / 4/23/03
7	EBH / 7/28/98	– / –	ISSUED FOR B PERMIT RENEWAL APPLICATION	– / –	– / –
6	EBH / 6/29/98	RJS / 6/29/98	AS BUILT FOR CQA PACKAGE	DL / 6/29/98	RJS / 6/29/98
5	DHE / 5/1/98	RJS / 5/8/98	REVISED DRAWING FOR MAY 1998 SUBMISSION TO IDEQ	DL / 5/8/98	RJS / 5/8/98
4	JZ / 3/28/97	MFP / 3/28/97	ISSUED FOR RECORD UPDATE	DL / 3/28/97	DDC / 3/28/97
3	DCH / 6/1/95	RJS / 6/1/95	ISSUED FOR CONTAINMENT BUILDING PERMIT	– / –	RJS / 6/1/95
2	AFN / –	– / –	AS BUILT	– / –	– / –
1	AFN / 12/22/93	RJS / 12/22/93	ADDED DUCT WORK, STACKS & DUST COLLECTORS	– / –	RJS / 12/22/93
0	AFN / 12/1/93	RJS / 12/1/93	ISSUED FOR CONSTRUCTION	DL / 12/1/93	RJS / 12/1/93
A	AFN / 9/3/93	RJS / 9/3/93	ISSUED FOR BIDDING	DL / 9/3/93	RJS / 9/3/93

USEcology Idaho
an American Ecology company

SITE B
GRAND VIEW, IDAHO
US EPA ID NO. IDD 073 114 654

TITLE: ARCHITECTURAL
CONTAINMENT BUILDING (DEBRIS AREA)
BUILDING ELEVATIONS – SHEET 2

DRAWN BY: AFN	DATE 7/23/93	SCALE:	FILE CODE 932A1068	REV. NO.
CHECKED RJS	DATE 12/1/93	ENGINEER RJS	DATE 12/1/93	DWG. NO. D2020-A06
PROJ. MGR. DL	DATE 12/1/93	APPROVED	DATE	PROJ. NO. D2020

8

DWG. NO. D2020-A07
PROJ. NO. D2020

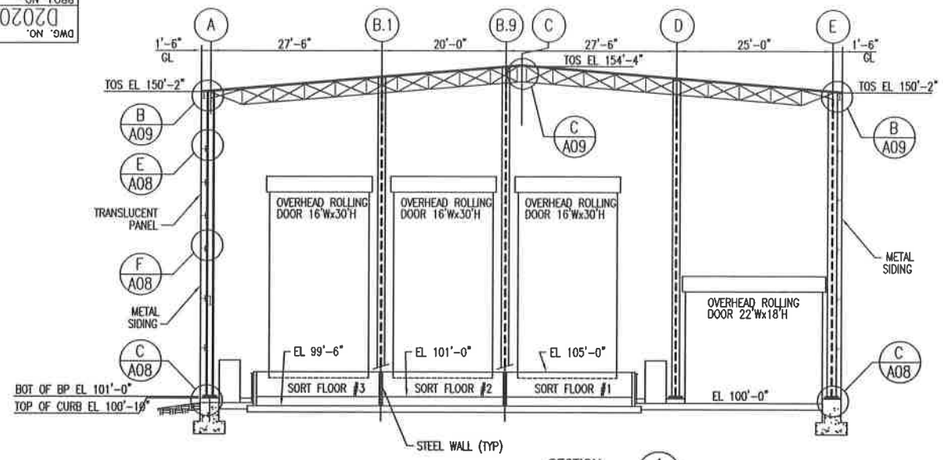

SECTION 1 A02 A04 A05
SCALE: 3/32"=1'-0"

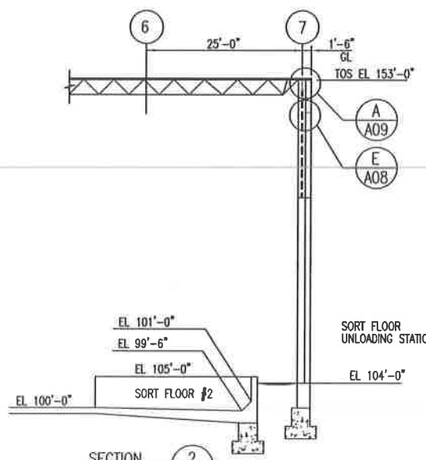

SECTION 2 A02 A04 A06
SCALE: 3/32"=1'-0"

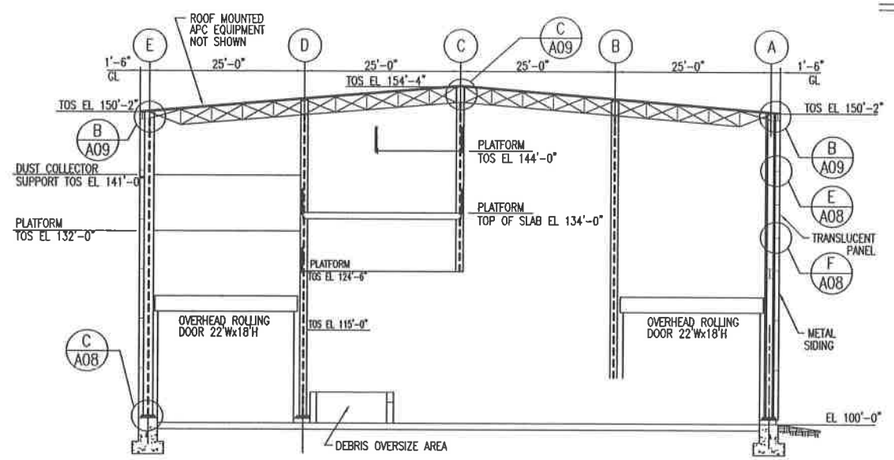

SECTION 4 A02 A04 A05
SCALE: 3/32"=1'-0"

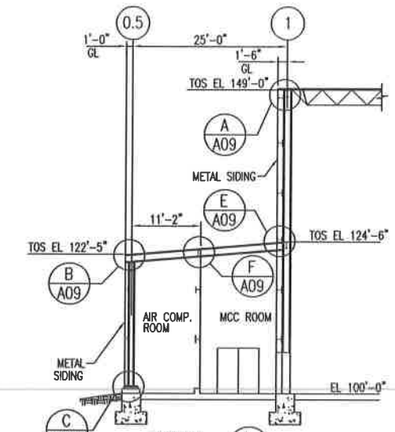

SECTION 5 A02 A04 A06
SCALE: 3/32"=1'-0"

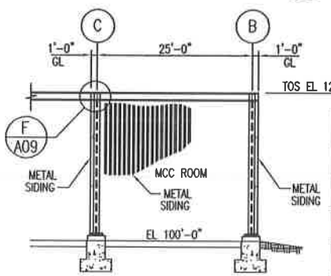

SECTION 6 A02 A04 A05
SCALE: 3/32"=1'-0"

GRAPHIC SCALE:
8' 4' 0' 8' 16'

REFERENCE DRAWINGS

DWG NO.	TITLE
A01	GENERAL NOTES & LEGEND
A02	DHB – FLOOR PLAN
A03	DHB – MISC PLATFORM PLANS
A04	DHB – ROOF PLANS
A05	DHB – BUILDING ELEVATIONS – SHEET 1
A06	DHB – BUILDING ELEVATIONS – SHEET 2
A08	DHB – SECTIONS & DETAILS – SHEET 1
A09	DHB – SECTIONS & DETAILS – SHEET 2
A10	DOOR, WINDOW & ROOM FINISH SCHEDULE

REV.	BY / DATE	CHK'D / DATE	DESCRIPTION	PROJ. ENGR / DATE	SUPV. ENGR / DATE
9	BJM / 4/24/03	– / –	2003 PERMIT RENEWAL	– / –	JH / 4/24/03
8	EMH / 7/28/98	– / –	ISSUED FOR B PERMIT RENEWAL APPLICATION	– / –	– / –
7	EMH / 4/29/98	PJS / 4/29/98	AS BUILT FOR CQA PACKAGE	DL / 4/29/98	PJS / 4/29/98
6	EMH / 5/1/98	PJS / 5/8/98	REVISED DRAWING FOR MAY 1998 SUBMISSION TO IDEQ	DL / 5/8/98	PJS / 5/8/98
5	JZ / 3/26/97	MFP / 3/26/97	ISSUED FOR RECORD UPDATE	DL / 3/26/97	PJS / 3/26/97
4	DCH / 6/1/95	PJS / 6/1/95	ISSUED FOR CONTAINMENT BUILDING PERMIT	– / –	PJS / 6/1/95
3	AFN / –	– / –	AS BUILT	– / –	– / –
2	AFN / 3/11/94	PJS / 3/11/94	FOR RESUBMISSION TO IDEQ	DL / 3/11/94	PJS / 3/11/94
1	AFN / 12/22/93	PJS / 12/22/93	ADDED SECTION 6; MISC REVISIONS SECT 1, 2, 3, 4 & 5	– / –	PJS / 12/22/93
0	AFN / 12/1/93	PJS / 12/1/93	ISSUED FOR CONSTRUCTION	DL / 12/1/93	PJS / 12/1/93
A	AFN / 8/3/93	PJS / 8/3/93	ISSUED FOR BIDDING	DL / 8/3/93	PJS / 8/3/93

USEcology Idaho
an American Ecology company

SITE B
GRAND VIEW, IDAHO
US EPA ID NO. IDD 073 114 654

TITLE:
ARCHITECTURAL
CONTAINMENT BUILDING (DEBRIS AREA)
BUILDING SECTIONS

DRAWN BY: AFN	DATE 8/3/93	SCALE:	FILE CODE 932A1079	REV. NO.
CHECKED PJS	DATE 12/1/93	ENGINEER PJS	DATE 12/1/93	DWG. NO. D2020-A07	9
PROJ. MGR. DL	DATE 12/1/93	APPROVED	DATE	PROJ. NO. D2020	

DWG. NO. D2020-C05
PROJ. NO. D2020

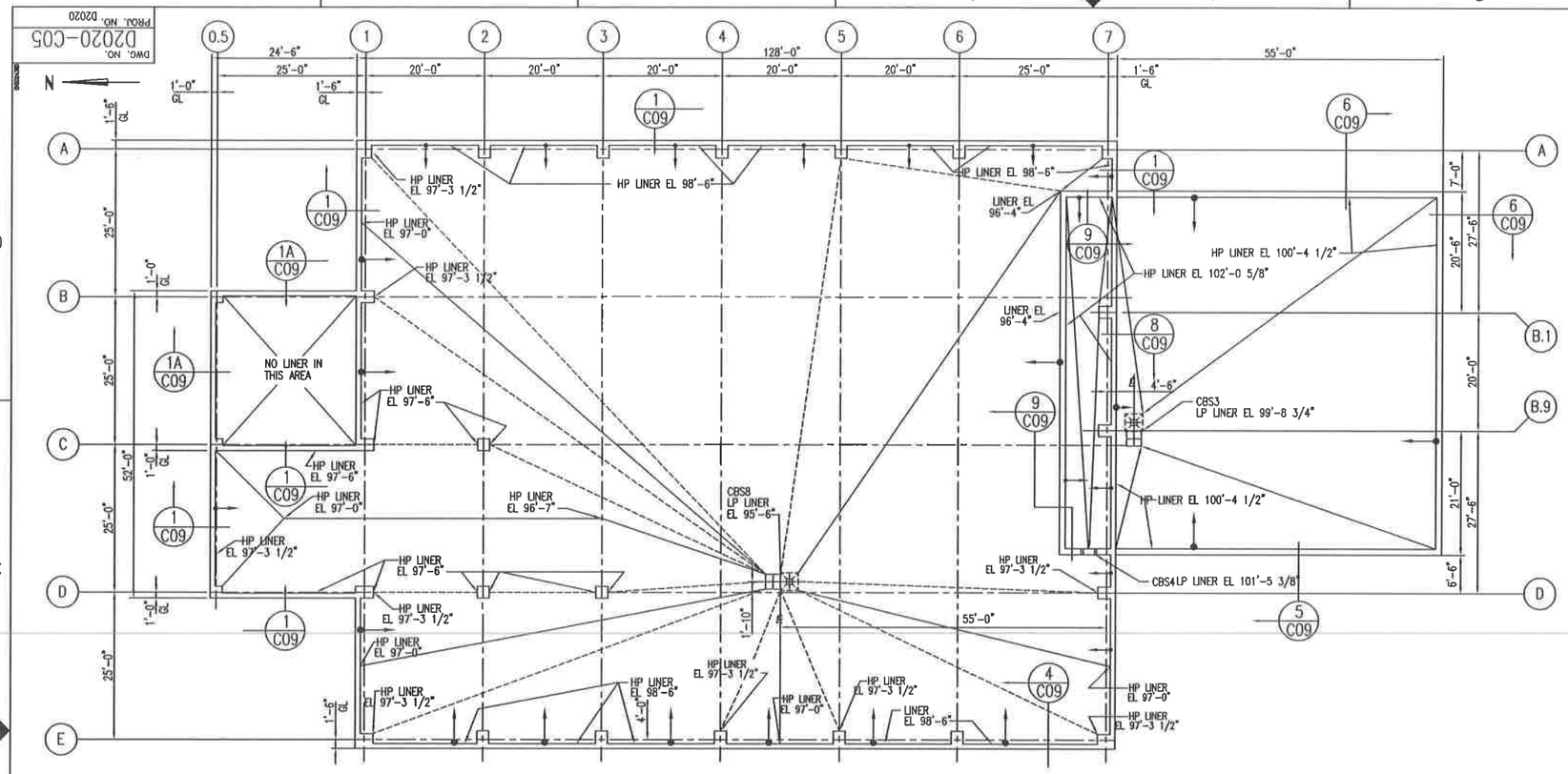

LINER PLAN
SCALE: 3/32" = 1'-0"

GRAPHIC SCALE:
8' 4' 0' 8' 16'

REFERENCE DRAWINGS

DWG NO.	TITLE
C01	SITE PLAN
C03	GENERAL NOTES & LEGEND
C04	DHB – FOUNDATION PLAN
C06	DHB – GROUND FLOOR PLAN
C07	DHB – SLAB SECTIONS & DETAILS
C08	DHB – TRENCH SECTIONS & DETAILS
C09	DHB – FOUNDATION SECTIONS & DET – SHT 1
C10	DHB – FOUNDATION SECTIONS & DET – SHT 2

REV.	BY / DATE	CHK'D / DATE	DESCRIPTION	PROJ. ENGR / DATE	SUPV. ENGR / DATE
9	BJM / 4/23/03	– / –	2003 PERMIT RENEWAL	– / –	JM / 4/23/03
8	EMH / 7/28/98	– / –	ISSUED FOR B PERMIT RENEWAL APPLICATION	– / –	– / –
7	EMH / 6/29/98	PJS / 6/29/98	AS BUILT FOR CQA PACKAGE	DL / 6/29/98	PJS / 6/29/98
6	EMH / 5/1/98	PJS / 5/8/98	REVISED DRAWING FOR MAY 1998 SUBMISSION TO IDEQ	DL / 5/8/98	PJS / 5/8/98
5	JZ / 3/28/97	MFP / 3/28/97	ISSUED FOR RECORD UPDATE	DL / 3/28/97	DDC / 3/28/97
4	DCH / 6/1/95	PJS / 6/1/95	ISSUED FOR CONTAINMENT BUILDING PERMIT	– / –	PJS / 6/1/95
3	APH / –	– / –	AS BUILT; ADDED LINER ELEVATIONS	– / –	– / –
2	APH / 1/25/94	PJS / 1/25/94	REVISED SUMP LOCATION & LINER ELEVATION	– / –	PJS / 1/25/94
1	LJS / 12/23/93	PJS / 12/23/93	REVISED LINER ELEVATIONS	– / –	PJS / 12/23/93
0	APH / 12/1/93	PJS / 12/1/93	ISSUED FOR CONSTRUCTION	DL / 12/1/93	PJS / 12/1/93
C	DBB / 9/13/93	PJS / 9/13/93	ADDED SECTION BUBBLES	TEH / 9/13/93	PJS / 9/13/93
B	DBB / 9/10/93	PJS / 9/10/93	FOR EPA SUBMISSION 9/93	TEH / 9/10/93	PJS / 9/10/93
A	DBB / 9/3/93	PJS / 9/3/93	ISSUED FOR BIDDING	TEH / 9/3/93	DL / 9/3/93

USEcology Idaho
an American Ecology company

SITE B
GRAND VIEW, IDAHO
US EPA ID NO. IDD 073 114 654

TITLE:
CIVIL
CONTAINMENT BUILDING (DEBRIS AREA)
LINER PLAN

DRAWN BY: DBB DATE 8/27/93	SCALE:	FILE CODE 932C1059	REV. NO.
CHECKED PJS DATE 12/1/93	ENGINEER PJS DATE 12/1/93	DWG. NO. D2020-C05	9
PROJ. MGR. DL DATE 12/1/93	APPROVED DATE	PROJ. NO. D2020	

DWG. NO. D2020-C08
PROJ. NO. D2020

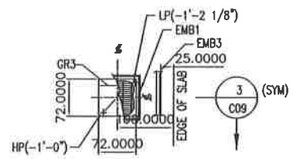

PLAN COLLECTION TRENCH – CT2

SCALE: 3/16" = 1'-0"

a. SEE PLAN FOR ORIENTATION.
b. TOG EL VARIES; SEE PLAN.

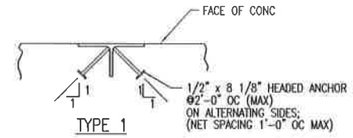

TYPE 1

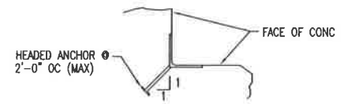

TYPE 2

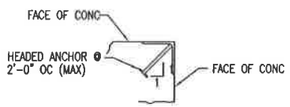

TYPE 3

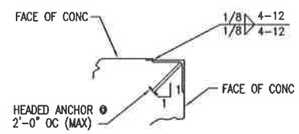

TYPE 4 (NOT USED)

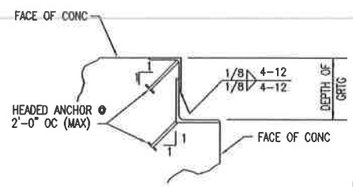

TYPE 5

CONTRACTOR'S OPTION TO USE BENT PL.

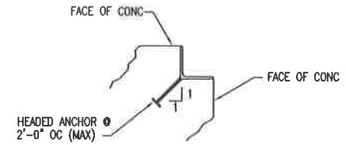

TYPE 6

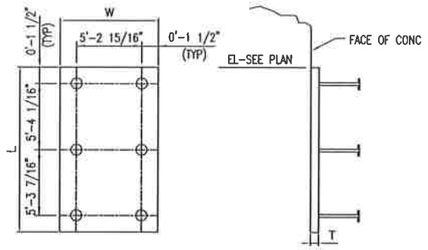

TYPE 7 (NOT USED)

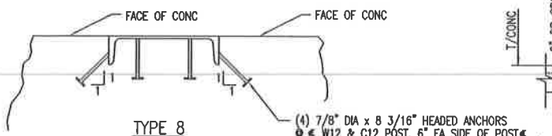

TYPE 8

a. PROVIDE 1/2" CLOSURE PL (WELDED) W/(2) 7/8" DIA x 8 3/16" HEADED ANCHORS @ 8" OC @ EA END

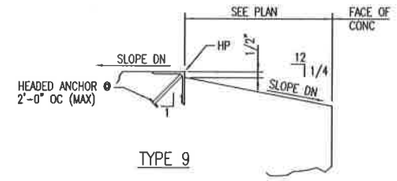

TYPE 9

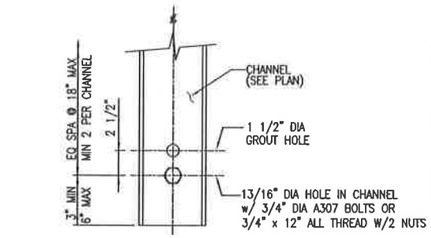

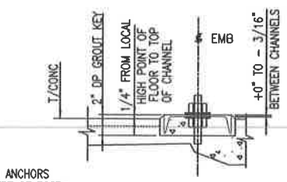

TYPE 10

a. CHANNEL MUST BE LEVEL AND TRUE.
b. AFTER GROUT HAS SET, REMOVE NUT.
c. WELD AROUND ANCHOR BOLT.
d. BURN OFF ANCHOR BOLT FLUSH WITH CHANNEL.

EMBEDMENT TYPE DETAILS

SCALE: NONE

a. HEADED ANCHORS: 1/2" x 4 1/8" UN.
b. LOCATE STUDS WITHIN 3" FROM EACH END OF MEMBER (UN).
c. USE A MINIMUM OF 3 STUDS/SIDE.
d. MITER, WELD, & GRIND INTERSECTING CORNERS OF FRAMES.

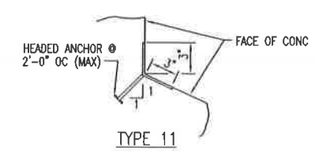

TYPE 11

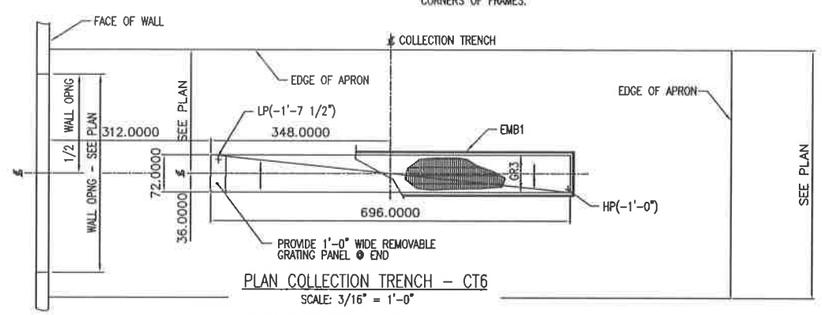

PLAN COLLECTION TRENCH – CT6

SCALE: 3/16" = 1'-0"

a. SEE PLAN FOR ORIENTATION.
b. TOG EL VARIES; SEE PLAN.

COLLECTION TRENCH TABLE				
MARK	QUANTITY	VOLUME (GALLONS)		
	CONTAINMENT BLDG	EACH	TOTAL	EAST AREA
CT1	——	593.2	1186.4	——
CT2	3	54.5	381.5	163.5
CT4	——	104.7	418.8	——
CT6	3	623.9	1871.7	1871.7
CT8	——	104.7	418.8	——
BUILDING TOTALS	6	——	4277.2	2035.2

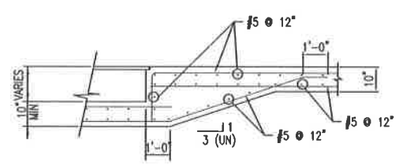

TYPICAL SECTION THRU COLECTION TRENCH

SCALE: 3/8" = 1'-0"

GRAPHIC SCALE:

3/16" = 1'-0" 4' 2' 0' 4' 8'

REFERENCE DRAWINGS	
DWG NO.	TITLE
C03	GENERAL NOTES & LEGEND
C04	DHB – FOUNDATION PLAN
C05	DHB – LINER PLAN
C06	DHB – GROUND FLOOR PLAN
C07	DHB – SLAB SECTIONS & DETAILS
C09	DHB – FOUNDATION SECTIONS & DET – SHT 1
C10	DHB – FOUNDATION SECTIONS & DET – SHT 2

EMBEDMENT SCHEDULE			
MARK	TYPE	MEMBER SIZE	REMARKS
EMB1	5	TOP 1 1/2" x 1 1/2 x 1/4" BOT L2 1/2 x 2 x 1/4" (LLH)	GALV
EMB2	6	L2 x 2 x 1/4"	GALV
EMB3	9	L4 x 3 x 1/4" (LLH)	GALV
EMB4	3	L3 x 3 x 1/4"	
EMB5	1	WT3 x 7.5	
EMB6	2	L3 x 3 x 1/4"	
EMB7	11	1/4" BENT PL	
EMB8	8	C15 x 50	
EMB9	2	L3 x 3 x 5/16"	OUTSTANDING LEG W/O CONC
EMB10	3	L3 x 3 x 5/16"	
EMB11	10	C3 x 6	GALV

REV.	BY / DATE	CHK'D / DATE	DESCRIPTION	PROJ ENGR / DATE	SUPV ENGR / DATE
8	RJM 4/24/03	- -	2003 PERMIT RENEWAL	- -	JH 4/24/03
7	EMH 7/29/98	- -	ISSUED FOR B PERMIT RENEWAL APPLICATION	- -	- -
6	EMH 6/29/98	PJS 6/29/98	AS BUILT FOR COA PACKAGE	DL 6/29/98	PJS 6/29/98
5	EMH 5/1/98	PJS 5/8/98	REVISED DRAWING FOR MAY 1998 SUBMISSION TO IDEQ	DL 5/8/98	PJS 5/8/98
4	JZ 3/28/97	MFP 3/28/97	ISSUED FOR RECORD UPDATE	DL 3/28/97	DDC 3/28/97
3	DCH 6/1/95	PJS 6/1/95	ISSUED FOR CONTAINMENT BUILDING PERMIT	- -	PJS 6/1/95
2	AFH - -	- -	AS BUILT; REVISED TYP SECT THRU COLLECTION TRENCH & REVISED TYPE 10 DETAIL	- -	- -
1	MFP 12/22/93	PJS 12/22/93	ADDED EM11 TO SCHEDULE	- -	PJS 12/22/93
0	LJS 12/1/93	PJS 12/1/93	ISSUED FOR CONSTRUCTION	DL 12/1/93	PJS 12/1/93
A	DBB 8/3/93	PJS 8/3/93	ISSUED FOR BIDDING	DL 8/3/93	PJS 8/3/93

USEcology Idaho
an American Ecology company

SITE B
GRAND VIEW, IDAHO
US EPA ID NO. IDD 073 114 654

TITLE:
CIVIL
CONTAINMENT BUILDING (DEBRIS AREA)
TRENCH SECTIONS & DETAILS

DRAWN BY: DATE DBB 8/31/93	SCALE:	FILE CODE 932C1088	REV. NO.
CHECKED DATE PJS 12/1/93	ENGINEER DATE PJS 12/1/93	DWG. NO. D2020-C08	8
PROJ. MGR. DATE DL 12/1/93	APPROVED DATE	PROJ. NO. D2020	

DWG. NO. D2020-H01
PROJ. NO. D2020

REFERENCE DRAWINGS	
DWG NO.	TITLE
G01	SITE PLAN

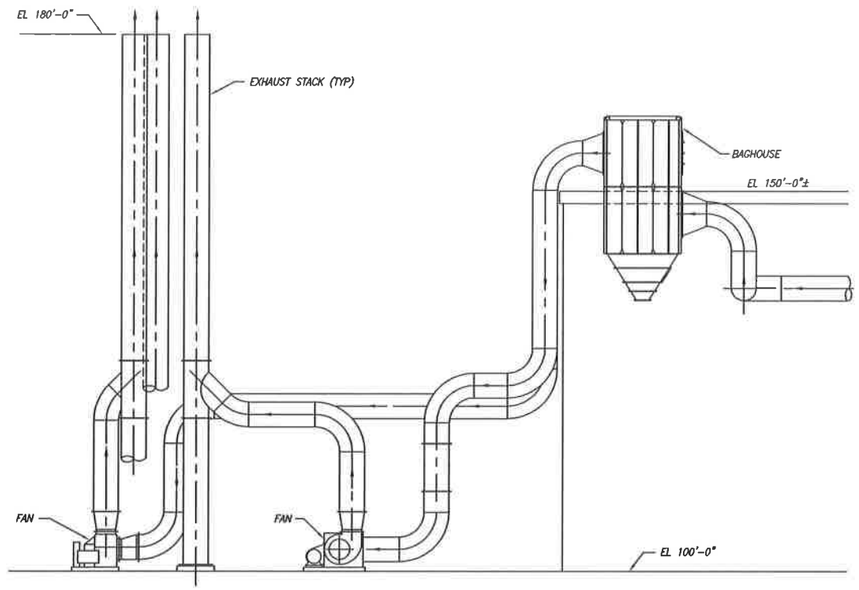

TYPICAL ELEVATION LOOKING EAST
SCALE 1/8"=1'-0"
(REFERENCE DWG NO. D2020-H04)

CONTAINMENT BUILDING				
UNIT	ESTIMATED FLOW RATE (CFM)	HOOD SOURCE	ENTRY PIPE SIZE (IN)	EXIT PIPE SIZE (IN)
1	25,000	DEBRIS CRUSHING AREA	36"ø	32"ø
2	36,000	SORT FLOOR 1, 2 & 3	42"ø	44"ø
3	25,000	GENERAL BUILDING VENTILATION	36"ø	38"ø

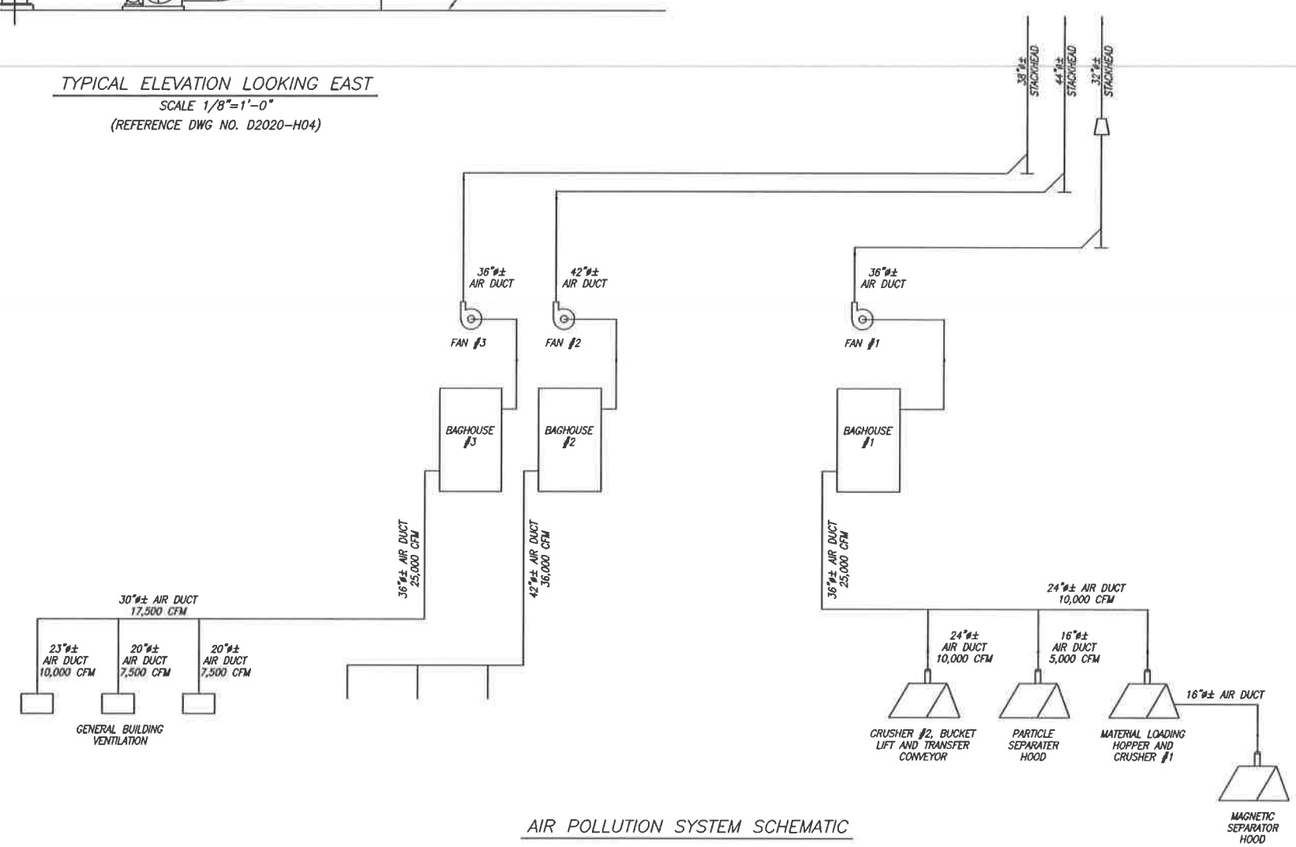

AIR POLLUTION SYSTEM SCHEMATIC

NOTE:
CRUSHER #1 – PRIMARY
CRUSHER #2 – SECONDARY

REV.	BY	DATE	CHK'D	DATE	DESCRIPTION	PROJ ENGR	DATE	SUPV ENGR	DATE
5			–	–	November 2, 2006 Permit Mod	–		–	
3			–	–	ISSUED FOR RCRA Part B PERMIT	–	–	–	–
2	DCH	4/1/95	RJS	4/1/95	ISSUED FOR CONTAINMENT BUILDING PERMIT	–	–	RJS	4/1/95
1	APH	–	–	–	AS BUILT	–	–	–	–
0	APH	4/11/94	RJS	4/11/94	ISSUED FOR CONSTRUCTION	DL	4/11/94	RJS	4/11/94
B	APH	3/11/94	RJS	3/11/94	FOR RESUBMISSION TO IDEQ	DL	3/11/94	RJS	3/11/94
A	LJS	10/8/93	RJS	10/8/93	FOR SUBMISSION TO EPA	TEH	10/8/93	RJS	10/8/93

USEcology Idaho
an American Ecology company

SITE B
GRAND VIEW, IDAHO
US EPA ID NO. IDD 073 114 654

TITLE: CONTAINMENT BUILDING (DEBRIS AREA)
AIR POLLUTION CONTROL SYSTEM
SECTION & SCHEMATIC

DRAWN BY: LJS DATE 10/8/93	SCALE:	FILE CODE 932H1015	REV. NO.
CHECKED ATC DATE 3/11/94	ENGINEER ATC DATE 3/11/94	DWG. NO. D2020-H01	5
PROJ. MGR. DL DATE 3/11/94	APPROVED RJS DATE 3/11/94	PROJ. NO. D2020	

DWG. NO. D2020-H03
PROJ. NO. D2020

N

VENTILATION LOUVER
AIR COMP ROOM
MCC ROOM
GENERAL BUILDING VENTILATION INTAKE
SEE DETAIL A H06
23" DIA DUCT ℄ EL 145'-0"
20" DIA DUCT ℄ EL 145'-0"
30"x23"x20" TAPERED BODY 45° LATERAL
GENERAL BUILDING VENTILATION INTAKE
SEE DETAIL C H07
CRUSHER AND BUCKET LIFT HOOD H-306
PLATFORM TOG EL 144'-0 5/8"
24" DIA HEAVY DUTY VOLUME CONTROL DAMPER (MANUAL) ℄ EL 149'-8"
24" DIA OFFSET FITTING
24" DIA DUCT ℄ EL 148'-3"
TOP OF SLAB EL 134'-0"
36"x24"x24" TAPERED BODY 45° LATERAL
RECTANGULAR TO ROUND ECCENTRIC DUCT TRANSITION (TYP) SEE DETAIL B H06
BAGHOUSE NO. 1 DC-601
BAGHOUSE NO. 2 DC-602
BAGHOUSE NO. 3 DC-603
30" DIA DUCT ℄ EL 145'-0"
20" DIA DUCT ℄ EL 145'-0"
36"x30"x20" TAPERED BODY 45° LATERAL
36" DIA DUCT ℄ EL 145'-0"
42" DIA DUCT ℄ EL 141'-0 5/8"
24" DIA DUCT ℄ EL 141'-0 5/8"
34" DIA DUCT ℄ EL 141'-0 5/8"
GENERAL BUILDING VENTILATION INTAKE
SEE DETAIL A H06
VENTILATION LOUVER

DUCT CLEANOUTS (CO)

FURNISH AND INSTALL IN APC DUCTWORK HINGED CLEANOUT ACCESS DOORS AS MFR'D BY UNITED Mc GILL CORP. TYPE ASHXFSDC GALVANIZED STEEL, WHERE INDICATED ON DRAWINGS AS FOLLOWS:
FOR 24" DIA DUCTS – SIZE 8"x10" NOMINAL OPENING
FOR 30" DIA, 34" DIA & 36" DIA DUCTS – 10"x12" NOMINAL OPENING
FOR 42" DIA DUCTS – SIZE 12"x14" NOMINAL OPENING

COMPOSITE DUCT SYSTEM PLAN

GRAPHIC SCALE: 4' 2' 0' 4' 8'

REV.	BY / DATE	CHK'D / DATE	DESCRIPTION	PROJ. ENGR / DATE	SUPV. ENGR
5		-	November 2, 2006 Permit Mod	-	-
4		-	ISSUED FOR RCRA Part B PERMIT	-	-
3	DCH 6/1/95	JVS 6/1/95	ISSUED FOR CONTAINMENT BUILDING PERMIT	-	-
2	AFB -	- -	AS BUILT; REVISED DUCT RUN @ BAGHOUSE NO. 1	-	-
1	EMH 3/11/94	FJO 3/11/94	FOR RESUBMISSION TO IDEQ	DL 3/11/94	JVS
0	DBK 12/28/93	ATC 12/28/93	ISSUED FOR CONSTRUCTION	DL 12/28/93	

USEcology Idaho
an American Ecology company

SITE B
GRAND VIEW, IDAHO
US EPA ID NO. IDD 073 114 654

TITLE: AIR POLLUTION CONTROL EQUIPMENT CONTAINMENT BUILDING (DEBRIS AREA) COMPOSITE DUCT SYSTEM – PLAN

DRAWN BY: EMH	DATE 12/10/93	SCALE: See Bar Scale	FILE CODE 93241036	REV. NO.
CHECKED ATC	DATE 12/29/93	ENGINEER ATC	DATE 12/29/93	DWG. NO. D2020-H03
PROJ. MGR. DL	DATE 12/29/93	APPROVED	DATE	PROJ. NO. D2020

6

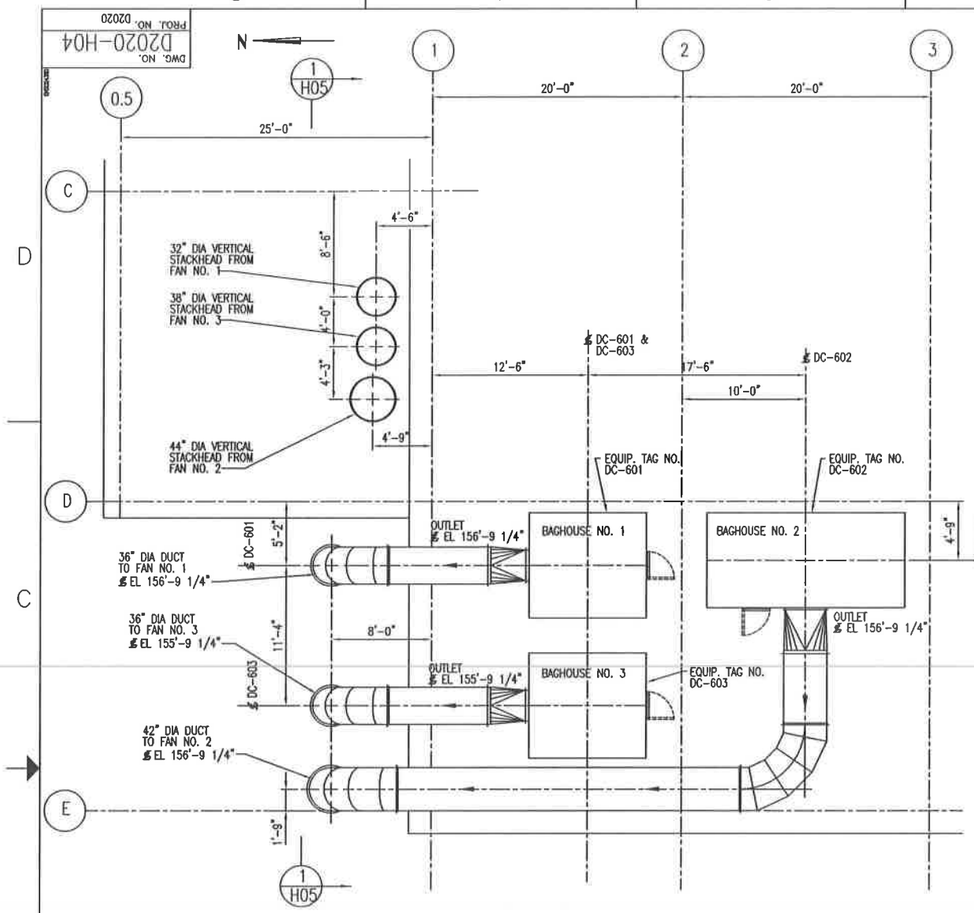

PLAN VIEW – ABOVE MAIN ROOF

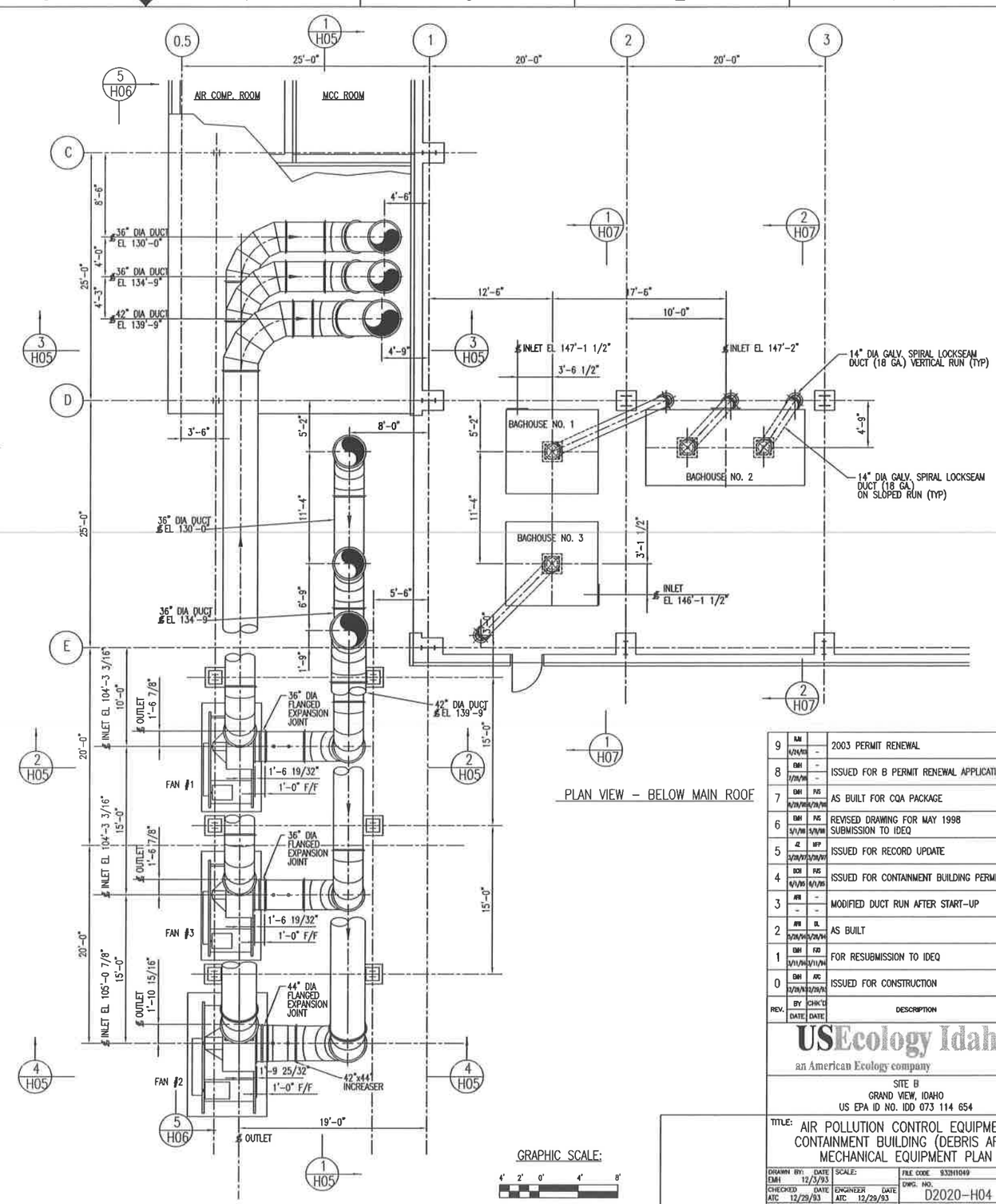

PLAN VIEW – BELOW MAIN ROOF

GRAPHIC SCALE:

4' 2' 0' 4' 8'

REV.	BY / DATE	CHK'D / DATE	DESCRIPTION	PROJ. ENGR. / DATE	SUPV. ENGR. / DATE
9	RJN 4/24/03	– –	2003 PERMIT RENEWAL	– –	JH 4/24/03
8	EMH 7/29/96	– –	ISSUED FOR B PERMIT RENEWAL APPLICATION	– –	– –
7	EMH 8/29/96	RJS 8/29/96	AS BUILT FOR CQA PACKAGE	DL 8/29/96	RJS 8/29/96
6	EMH 5/1/96	RJS 5/1/96	REVISED DRAWING FOR MAY 1996 SUBMISSION TO IDEQ	DL 5/1/96	RJS 5/1/96
5	JZ 1/29/97	MFP 1/29/97	ISSUED FOR RECORD UPDATE	DL 1/29/97	DDC 1/29/97
4	DCH 6/1/95	RJS 6/1/95	ISSUED FOR CONTAINMENT BUILDING PERMIT	– –	RJS 6/1/95
3	AFR – –	– –	MODIFIED DUCT RUN AFTER START-UP	– –	– –
2	AFR 5/28/94	DL 5/28/94	AS BUILT	DL 5/28/94	RJS 5/28/94
1	EMH 3/11/94	FJD 3/11/94	FOR RESUBMISSION TO IDEQ	DL 3/11/94	RJS 3/11/94
0	EMH 12/29/93	ATC 12/29/93	ISSUED FOR CONSTRUCTION	DL 12/29/93	RJS 12/29/93

USEcology Idaho
an American Ecology company

SITE B
GRAND VIEW, IDAHO
US EPA ID NO. IDD 073 114 654

TITLE: AIR POLLUTION CONTROL EQUIPMENT CONTAINMENT BUILDING (DEBRIS AREA) MECHANICAL EQUIPMENT PLAN

DRAWN BY: EMH	DATE 12/3/93	SCALE:	FILE CODE 93211049	REV. NO.
CHECKED ATC	DATE 12/29/93	ENGINEER ATC	DATE 12/29/93	DWG. NO. D2020-H04
PROJ. MGR. D. LIZZI	DATE 12/29/93	APPROVED	DATE	PROJ. NO. D2020

9

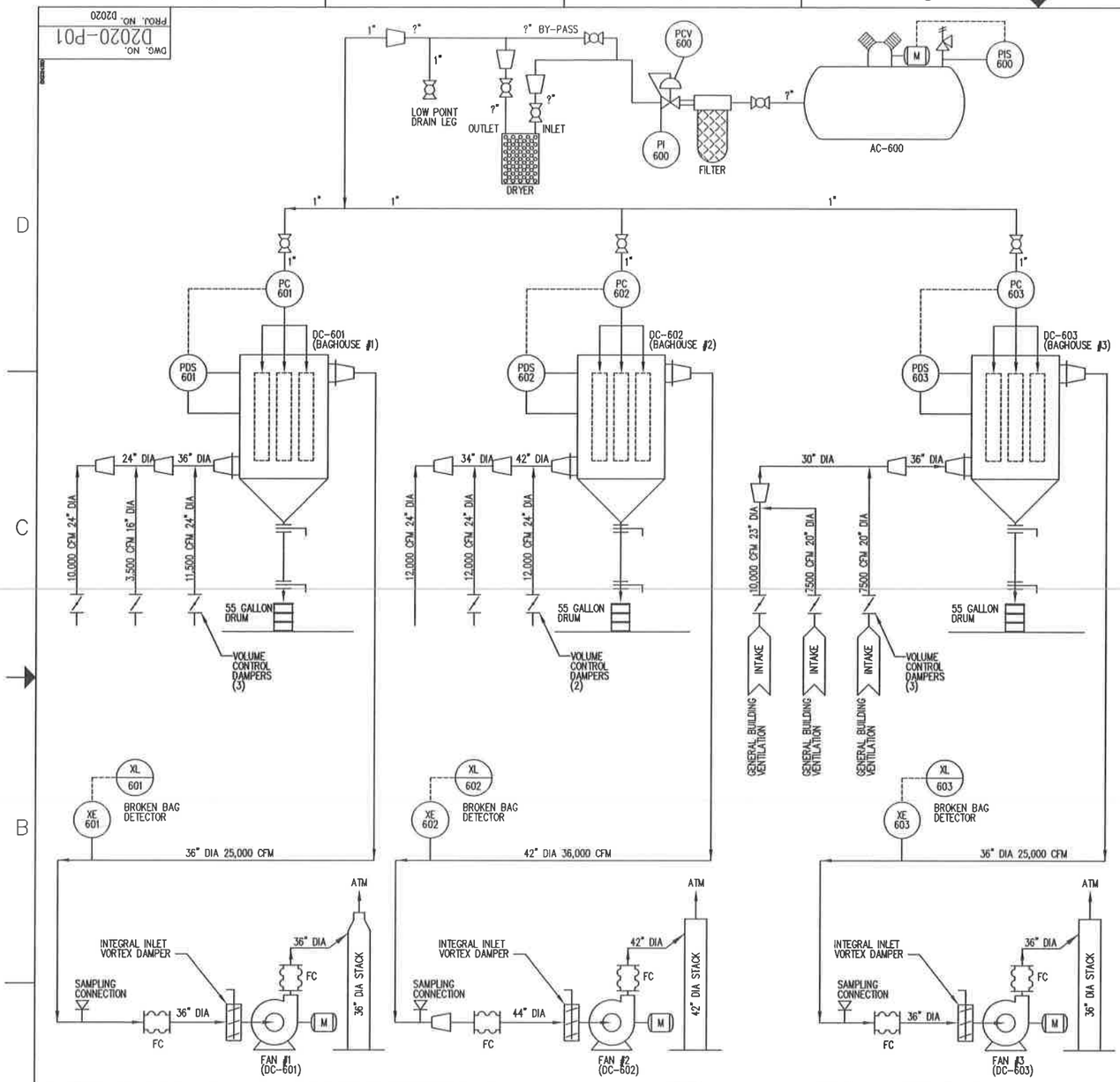

DWG. NO. D2020-P01
PROJ. NO. D2020

DUST COLLECTOR SYSTEM DC-601

TYPE:	BAGHOUSE
CAP:	25,000 CFM
SIZE:	160 BAGS
AIR/CLOTH RATIO:	15.7 : 1
BAGHOUSE MODEL:	160HF#8
FAN MODEL:	SQB-33
FAN HP:	75
WT:	9200#
MFR:	TORIT/DAY (BAGHOUSE) CHICAGO (FAN)

DUST COLLECTOR SYSTEM DC-602

TYPE:	BAGHOUSE
CAP:	36,000 CFM
SIZE:	256 BAGS
AIR/CLOTH RATIO:	14.0 : 1
BAGHOUSE MODEL:	256HF#8
FAN MODEL:	SQB-40.25
FAN HP:	100
WT:	12,900#
MFR:	TORIT/DAY (BAGHOUSE) CHICAGO (FAN)

DUST COLLECTOR SYSTEM DC-603

TYPE:	BAGHOUSE
CAP:	25,000 CFM
SIZE:	160 BAGS
AIR/CLOTH RATIO:	15.7 : 1
BAGHOUSE MODEL:	160HF#8
FAN MODEL:	SQB-33
FAN HP:	75
WT:	9200#
MFR:	TORIT/DAY (BAGHOUSE) CHICAGO (FAN)

AIR COMPRESSOR SYSTEM AC-600

TYPE:	RECIPROCATING
CAP:	35 CFM
SIZE:	80 GALLON TANK
MODEL:	T30T080H
ACCESSORIES:	FILTER-REGULATOR, & DRYER
HP:	10
WT:	935#
MFR:	INGERSOLL-RAND

REV.	BY / DATE	CHK'D / DATE	DESCRIPTION	PROJ ENGR / DATE	SUPV ENGR / DATE
3		- -	November 2, 2006 Permit Mod	- -	
2		- -	ISSUED FOR RCRA Part B PERMIT	- -	- -
1	DM 1/18/94	AC 1/18/94	REVISED AS NOTED ISSUED FOR CONSTRUCTION	DL 1/18/94	PJS 1/18/94
0	MP 1/12/94	AC 1/12/94	ISSUED FOR CONSTRUCTION	DL 1/12/94	PJS 1/12/94

USEcology Idaho
an American Ecology company

SITE B
GRAND VIEW, IDAHO
US EPA ID NO. IDD 073 114 654

TITLE:
PROCESS & INSTRUMENT DIAGRAM
CONTAINMENT BUILDING COMPLEX

DRAWN BY: MFP DATE 11/29/93	SCALE:	FILE CODE 932P1014	REV. NO.
CHECKED ATC DATE 1/12/94	ENGINEER ATC DATE 1/12/94	DWG. NO. D2020-P01	4
PROJ. MGR. DL DATE 1/12/94	APPROVED PJS DATE 1/12/94	PROJ. NO. D2020	

DWG. NO. D2020-R02
PROJ. NO. D2020

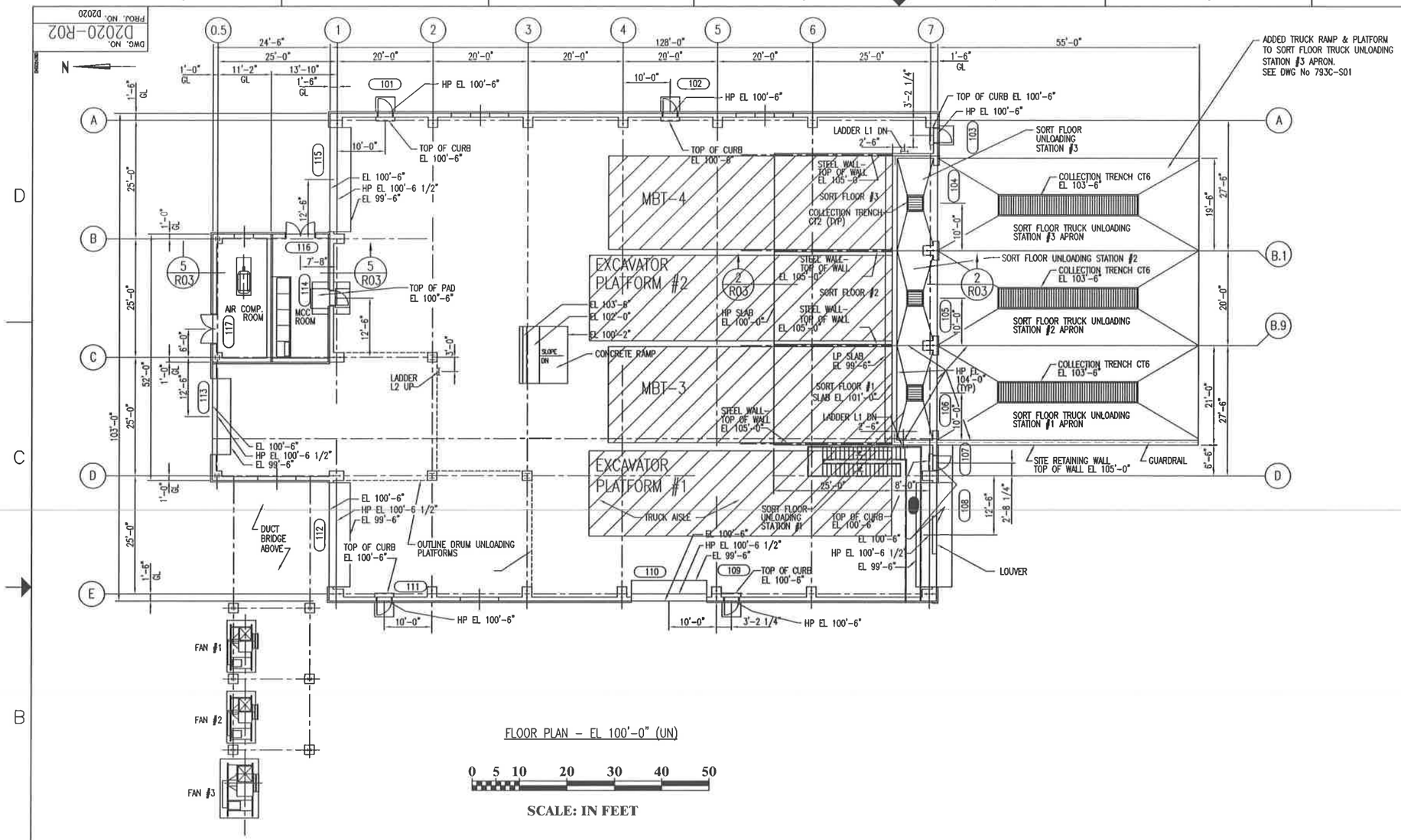

FLOOR PLAN – EL 100'-0" (UN)

0 5 10 20 30 40 50

SCALE: IN FEET

REFERENCE DRAWINGS	
DWG NO.	TITLE
R03	BUILDING SECTIONS – SHEET 1
R05	TYPICAL DETAILS

REV.	BY / DATE	CHK'D / DATE	DESCRIPTION	PROJ ENGR / DATE	SUPV ENGR / DATE
H	NWS 12/2/06	– –	NOVEMBER 6, 2006 PERMIT MODIFICATION	– –	– –
G	AJB 4/24/03	– –	2003 PERMIT RENEWAL	– –	JH 4/24/03
F	CBH 7/29/99	– –	ISSUED FOR B PERMIT APPLICATION	– –	– –
E	LJS –	– –	ADDED PRIMARY CRUSHER	– –	– –
D	AFN 9/10/93	RJS 9/10/93	FOR EPA SUBMISSION 9/93	TBH 9/10/93	RJS 9/10/93
C	DBB 7/15/93	RJS 7/15/93	ADDED CAMPAIGN BINS	DL 7/15/93	RJS 7/15/93
B	CBH 4/22/93	– –	FOR CLIENT REVIEW	– –	– –
A	AFN 2/26/93	RJS 2/26/93	FOR SUBMISSION TO EPA	DL 2/26/93	RJS 2/26/93

USEcology Idaho
an American Ecology company

SITE B
GRAND VIEW, ID
US EPA ID NO. IDD 073 114 654

TITLE:
GENERAL ARRANGEMENT
CONTAINMENT BUILDING (DEBRIS AREA)
FLOOR PLAN

DRAWN BY: AFN	DATE 2/24/93	SCALE:	FILE CODE 932R1021	REV. NO.
CHECKED	DATE	ENGINEER DATE	DWG. NO. D2020-R02	1
PROJ. MGR.	DATE	APPROVED DATE	PROJ. NO. D2020	

DWG. NO. D2020-R05
PROJ. NO. D2020

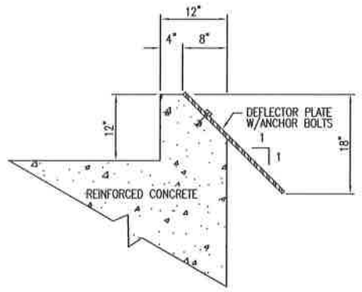

BUMPER CURB

DETAIL 1/R03

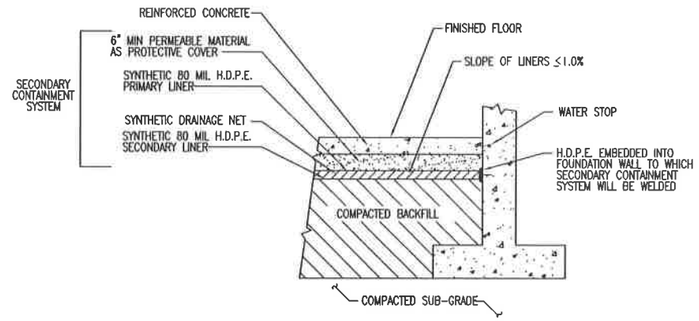

SECONDARY CONTAINMENT

DETAIL 2/R03

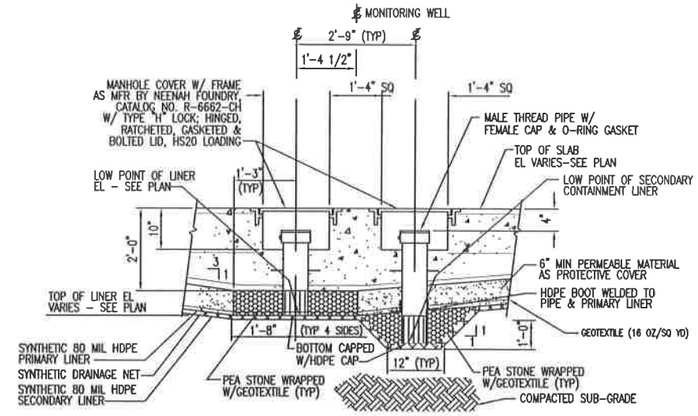

CONTAINMENT MONITORING & SUMP @ SLAB

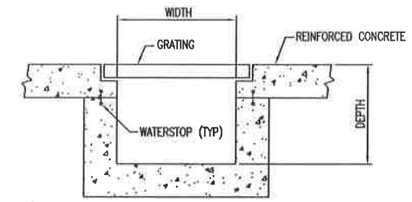

TYPICAL COLLECTION TRENCH

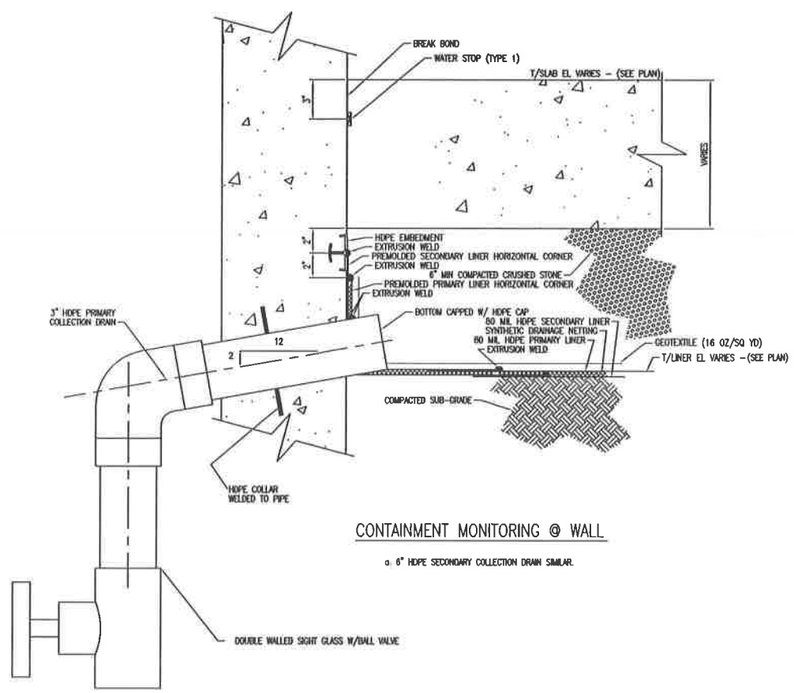

CONTAINMENT MONITORING @ WALL

a: 6" HDPE SECONDARY COLLECTION DRAIN SIMILAR.

REV.	BY / DATE	CHK'D / DATE	DESCRIPTION	PROJ ENGR / DATE	SURV ENGR / DATE
4	RJH / 4/24/03	- / -	2003 PERMIT RENEWAL	- / -	JH / 4/24/03
3	EMH / 7/29/98	- / -	ISSUED FOR B PERMIT RENEWAL APPICATION	- / -	- / -
2	DCH / 8/1/95	RJS / 8/1/95	ISSUED FOR CONTAINMENT BUILDING PERMIT	- / -	RJS / 8/1/95
1	AFN / -		AS BUILT	- / -	- / -
0	AFN / 4/11/94	RJS / 4/11/94	ISSUED FOR CONSTRUCTION	DL / 4/11/94	RJS / 4/11/94
D	LJS / 3/11/94	RJS / 3/11/94	FOR RESUBMISSION TO IDEQ	DL / 3/11/94	RJS / 3/11/94
C	MFP / 1/31/93	RJS / 1/31/93	FOR EPA SUBMISSION 11/93	EEH / 1/31/93	RJS / 1/31/93
B	MFP / 9/10/93	RJS / 9/10/93	FOR EPA SUBMISSION 9/93	EEH / 9/10/93	RJS / 9/10/93
A	AFN / 2/26/93	RJS / 2/26/93	FOR SUBMISSION TO EPA	DL / 2/26/93	RJS / 2/26/93

USEcology Idaho
an American Ecology company

SITE B
GRAND VIEW, IDAHO
US EPA ID NO. IDD 073 114 654

TITLE: GENERAL ARRANGEMENT
CONTAINMENT BUILDING (DEBRIS AREA)
TYPICAL DETAILS

DRAWN BY: AFN	DATE 2/24/93	SCALE:		FILE CODE 932R1054		REV. NO.
CHECKED	DATE	ENGINEER	DATE	DWG. NO. D2020-R05		4
PROJ. MGR.	DATE	APPROVED	DATE	PROJ. NO. D2020		

DWG. NO. D2020-R07
PROJ. NO. D2020

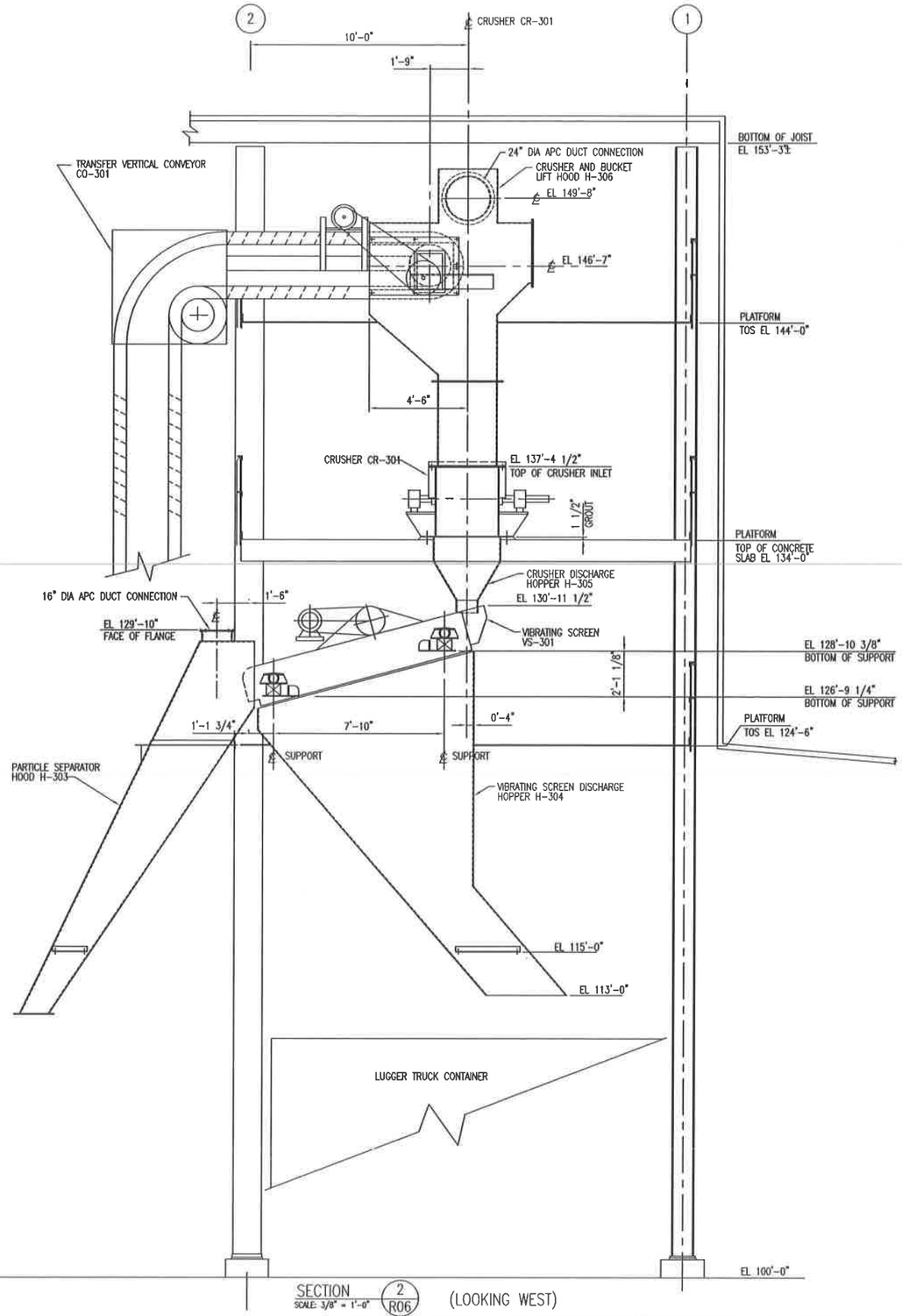

SECTION 2/R06 (LOOKING WEST)
SCALE: 3/8" = 1'-0"

GRAPHIC SCALE: 2' 1' 0' 2' 4'

REV.	BY / DATE	CHK'D / DATE	DESCRIPTION	PROJ ENGR / DATE	SUPV ENGR / DATE
6	AJM / 4/24/03	– / –	2003 PERMIT RENEWAL	– / –	JH / 4/24/03
5	EMH / 7/28/98	– / –	ISSUED FOR B PERMIT RENEWAL APPLICATION	– / –	– / –
4	DCH / 6/1/95	PJS / 6/1/95	ISSUED FOR CONTAINMENT BUILDING PERMIT	– / –	PJS / 6/1/95
3	APH / –	– / –	AS BUILT	– / –	– / –
2	APH / 3/11/94	ARC / 3/11/94	FOR RESUBMISSION TO IDEQ	DL / 3/11/94	PJS / 3/11/94
1	LJS / 12/22/93	PJS / 12/22/93	REVISED HOOD H-303	– / –	PJS / 12/22/93
0	EMH / 12/3/93	PJS / 12/3/93	ISSUED FOR CONSTRUCTION	DL / 12/3/93	PJS / 12/3/93
A	EMH / 9/2/93	PJS / 9/2/93	ISSUED FOR BIDDING	DL / 9/2/93	PJS / 9/2/93

USEcology Idaho
an American Ecology company

SITE B
GRAND VIEW, IDAHO
US EPA ID NO. IDD 073 114 654

TITLE: EQUIPMENT ARRANGEMENT
CONTAINMENT BUILDING (DEBRIS AREA)
SECTIONS

DRAWN BY: EMH DATE 9/2/93	SCALE:	FILE CODE 932R1076	REV. NO.
CHECKED PJS DATE 12/3/93	ENGINEER PJS DATE 12/3/93	DWG. NO. D2020-R07	6
PROJ. MGR. DL DATE 12/3/93	APPROVED PJS DATE 3/11/94	PROJ. NO. D2020	

DWG. NO. D2020-R08
PROJ. NO. D2020

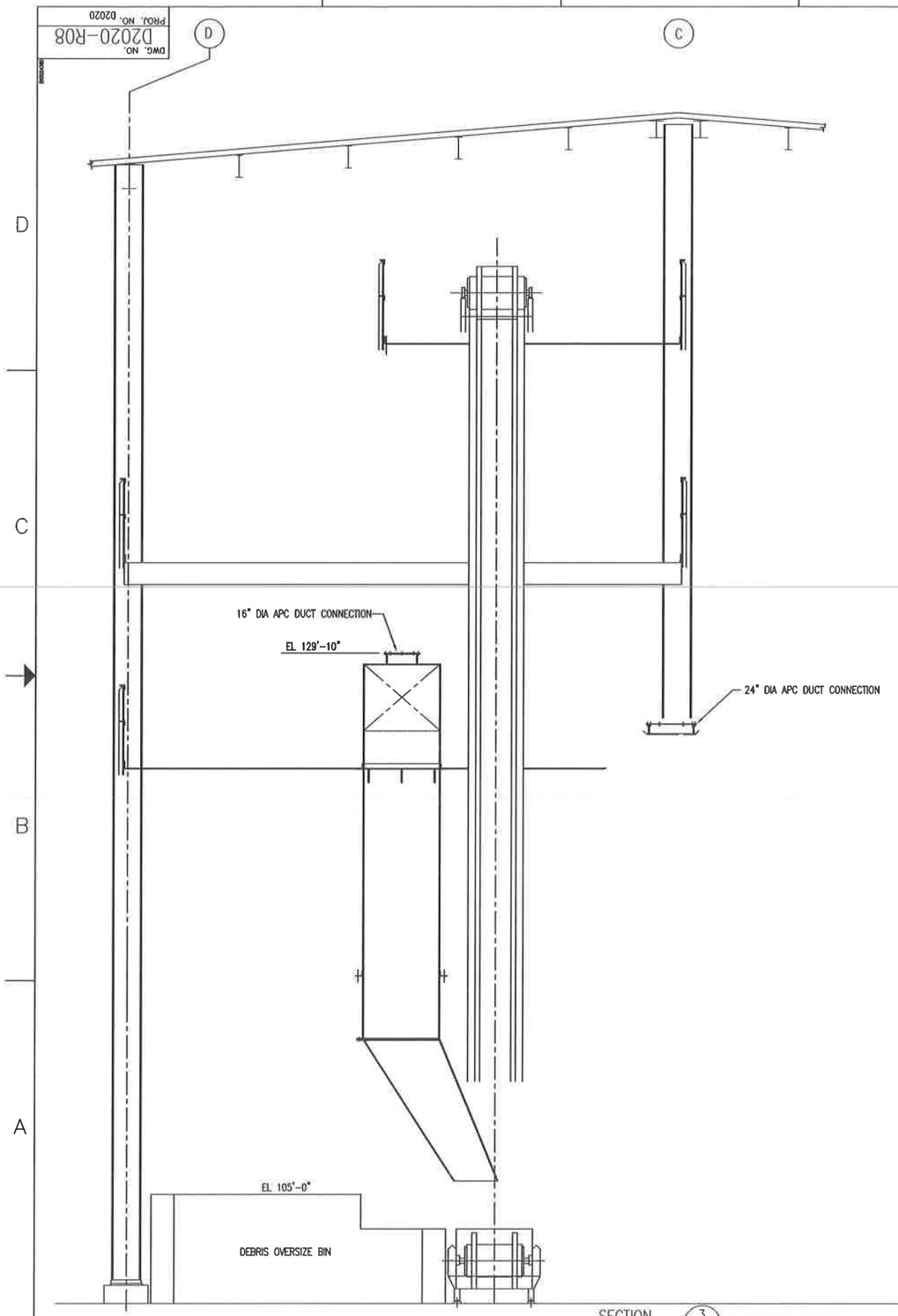

SECTION 3/R06 SCALE: 3/8" = 1'-0" (LOOKING NORTH)

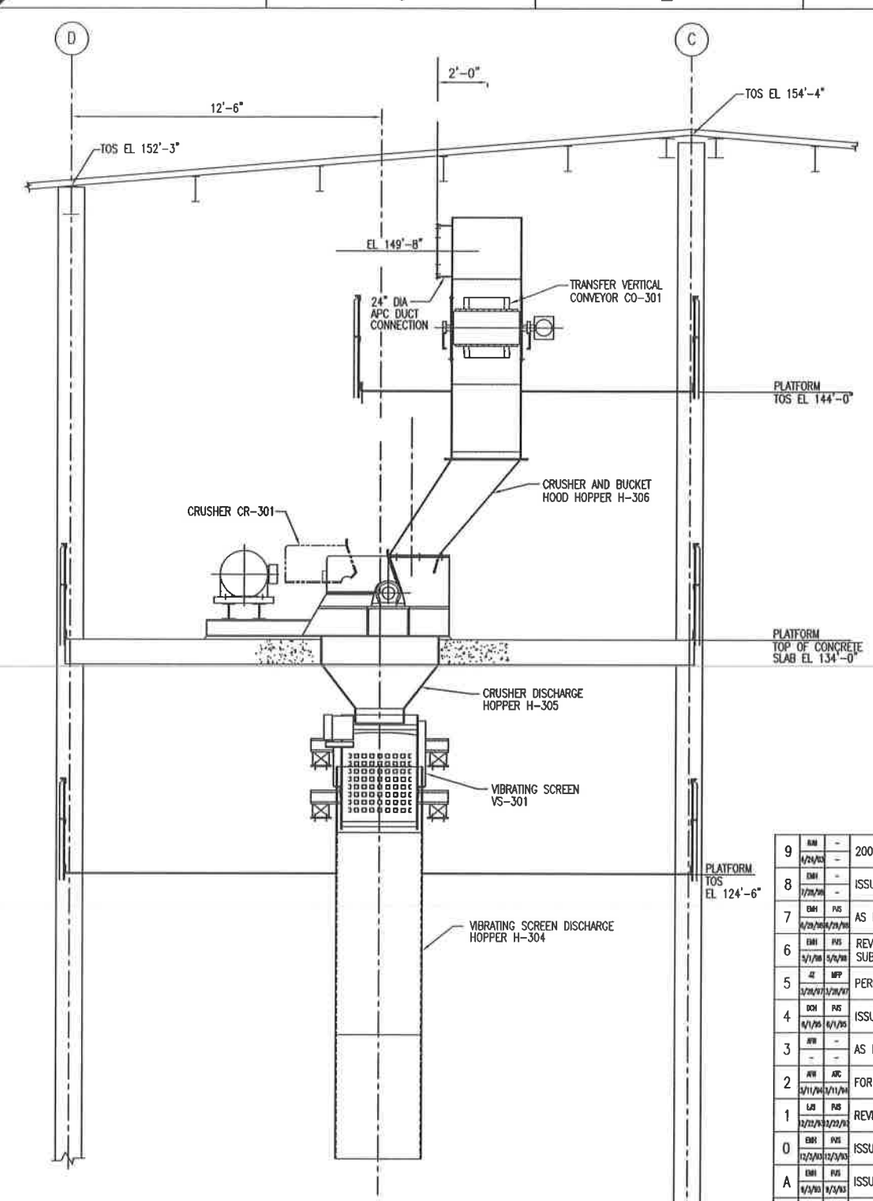

SECTION 4/R06 SCALE: 3/8" = 1'-0" (LOOKING NORTH)

GRAPHIC SCALE: 2' 1' 0' 2' 4'

REV.	BY / DATE	CHK'D / DATE	DESCRIPTION	PROJ. ENGR / DATE	SUPV. ENGR / DATE
9	RJM / 4/29/03	- / -	2003 PERMIT RENEWAL	- / -	JH / 4/24/03
8	EMH / 1/28/98	- / -	ISSUED FOR B PERMIT RENEWAL APPLICATION	- / -	- / -
7	EMH / 4/29/96	PJS / 4/29/96	AS BUILT FOR CQA PACKAGE	DL / 4/29/96	PJS / 4/29/96
6	EMH / 5/1/96	PJS / 5/9/96	REVISED DRAWING FOR MAY 1998 SUBMISSION TO IDEQ	DL / 5/9/96	PJS / 5/29/96
5	JZ / 1/28/97	MPP / 1/28/97	PERMIT ISSUE	DL / 1/28/97	DDC / 1/28/97
4	DCH / 6/1/95	PJS / 6/1/95	ISSUED FOR CONTAINMENT BUILDING PERMIT	- / -	PJS / 6/1/95
3	JKW / -	- / -	AS BUILT	- / -	- / -
2	JKW / 3/11/94	ARC / 3/11/94	FOR RESUBMISSION TO IDEQ	DL / 3/11/94	ARC / 3/11/94
1	LJS / 12/22/93	PJS / 12/22/93	REVISED HOOD H-303	- / -	PJS / 12/22/93
0	EMH / 12/3/93	PJS / 12/3/93	ISSUED FOR CONSTRUCTION	DL / 12/3/93	PJS / 12/3/93
A	EMH / 9/3/93	PJS / 9/3/93	ISSUED FOR BIDDING	DL / 9/3/93	PJS / 9/3/93

USEcology Idaho
an American Ecology company

SITE B
GRAND VIEW, IDAHO
US EPA ID NO. IDD 073 114 654

TITLE:
EQUIPMENT ARRANGEMENT CONTAINMENT BUILDING (DEBRIS AREA) SECTIONS & DETAILS

DRAWN BY: EMH DATE 9/8/93	SCALE:	FILE CODE 932R1089	REV. NO. 9
CHECKED PJS DATE 12/3/93	ENGINEER PJS DATE 12/3/93	DWG. NO. D2020-R08	
PROJ. MGR. DL DATE 12/3/93	APPROVED DATE	PROJ. NO. D2020	

Containment Building (Stabilization Area)

Drawing Number	Drawing Title	May 2014 USEI Permit Application Section Reference
793P-C05	Civil Containment Building (Stabilization Area) Foundation Plan	D, I
793P-C06	Civil - Containment Building (Stabilization Area) Foundation Plan @ Mixing Bins	D, I
793P-C07	Civil Containment Building (Stabilization Area) Liner Plan	D, I
793P-C08	Civil Containment Building (Stabilization Area) Slab Plan	D, I
793P-C09	Civil Contianment Building (Stabilization Area) Foundation Sections and Details - Sheet 1	D
793P-C12	Containment Building (Stabilization Area) Typical Mixing Bin Sections and Details	D
793P-C13	Civil - Containment Building (Stabilization Area) Mixing Bin Sections	D, I
793P-C14	Civil - Containment Building (Stabilization Area) Section and Details	D, I
793P-C15	Civil - Containment Building (Stabilization Area) Slab Sections and Details	D, I
793P-C16	Civil - Containment Building (Stabilization Area) Miscellaneous Sections and Details	D
793P-C17	Civil - Containment Building (Stabilization Building) Equipment Foundations Plan	I
793P-G01	Air and Process Water System Containment Building (Stabilzation Area) Plan View and Section	D, I
793P-H01	Air Pollution Control System Containment Building (Stabilization Area) Plan View and Section	D, I
793P-P03	Typical Schematic Flow Diagram Air Pollution Control System Containment Building (Stabilization Area)	D
793P-P04	Typical Schematic Flow Diagram Containment Building (Stabilization Area) Process Water System	D
793P-R01	Typical Equipment Arrangement Containment Building (Stabilization Area) Floor Plan	D, I
793P-R02	Typical Equipment Arrangement Containment Building (Stabilization Area) Elevations	D, I
PRMI-D04	Civil - Containment Building (Stabilization Building) Typical Storm Drain Profiles and Details	General Information
PRMI-R31	General Arrangement Containment Building (Stabilization Area) Typical Plan - Sheet 1	D, I
PRMI-R32	General Arrangement Containment Building (Stabilization Area) Typical Plan - Sheet 2	D, I
PRMI-R33	General Arrangement Containment Building (Stabilization Area) Typical Sections Sheet 1	D, I
PRMI-R34	General Arrangement Contianment Building (Stabilization Area) Typical Sections Sheet 2	D, I
PRMI-R35	General Arrangement Contianment Building (Stabilization Area) Typical Sections Sheet 3	D, I

DWG. NO. 793P-C05
PROJ. NO. PRMI

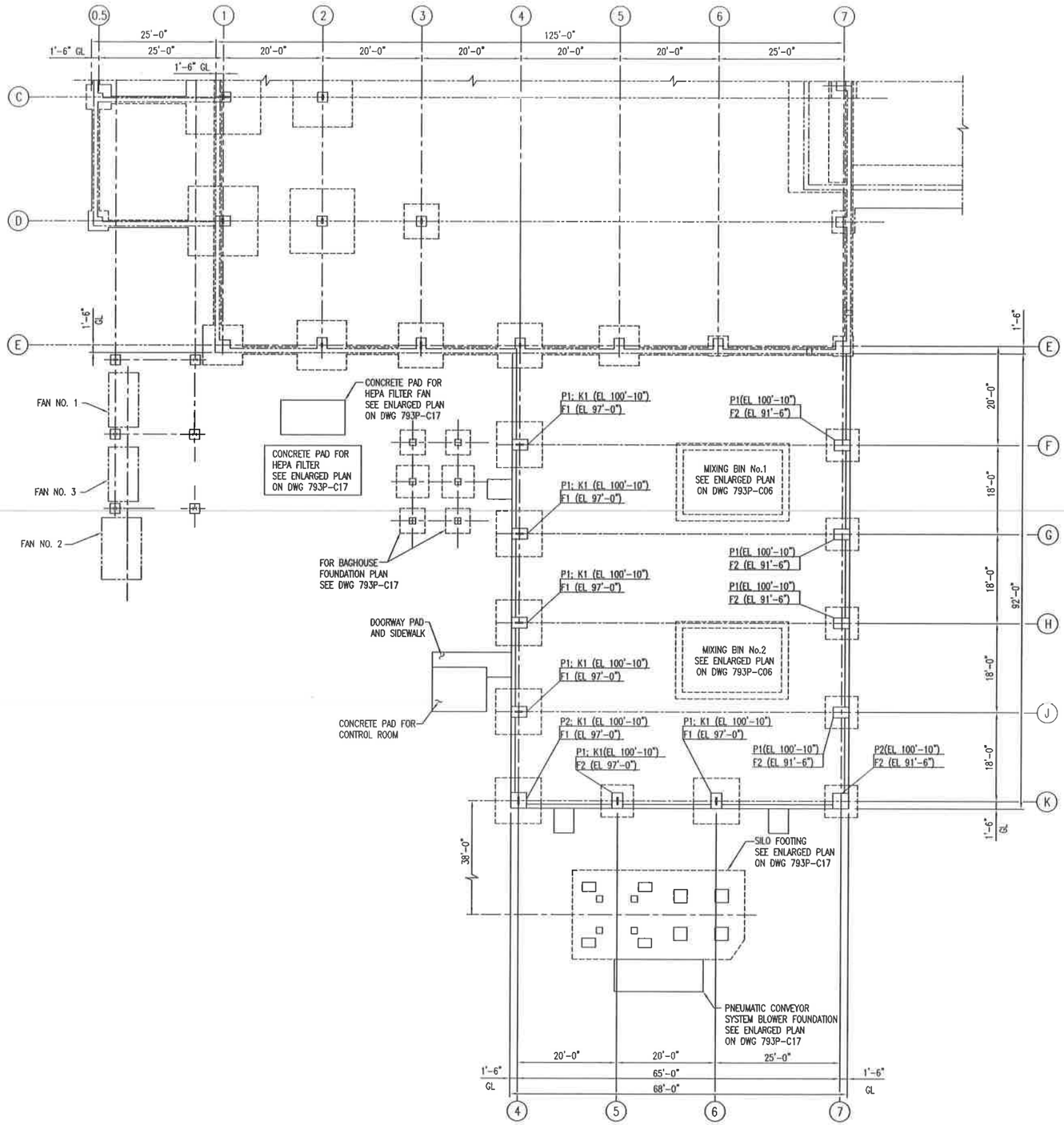

FOUNDATION PLAN
SCALE: 3/32"=1'-0"

GRAPHIC SCALE:
8' 4' 0' 8' 16'

REFERENCE DRAWINGS

DWG NO.	TITLE
C01	GENERAL NOTES & LEGEND
C06	SB – FOUNDATION PLAN ⊙ MIXING BINS
C07	SB – LINER PLAN
C08	SB – SLAB PLAN
C09	SB – FOUNDATIONS SECTIONS & DETAILS
C10	SB – MIXING BIN LINER PLATE – SECTIONS & DETAILS
C11	SB – MIXING BIN LINER PLATE – SECTIONS & DETAILS
C12	SB – MIXING BIN – SECTIONS & DETAILS
C13	SB – MIXING BINS SECTIONS & DETAILS
C14	SB – MIXING BINS SECTIONS & DETAILS
C15	SB – SLAB SECTIONS & DETAILS
C16	SB – SLAB SECTIONS & DETALS
C17	SB – EQUIPMENT FOUNDATION PLANS
C18	SB – WATER TANK FOUNDATION PLAN

SHEAR KEY SCHEDULE
(SEE DETAILS ON DWG NO. 793P-C09)

MARK	TYPE	DIMENSIONS X	DIMENSIONS Y	DEPTH	REMARKS
K1	1	12"	3"	5"	

PIER SCHEDULE
(SEE DETAIL ON DWG NO. 793P-C09)

MARK	TYPE	DIMENSIONS A	DIMENSIONS B	REINFORCING VERT	REINFORCING TIES	REMARKS
P1	B	3'-2"	2'-2"	8#8	#4@12	
P2	A	3'-2"	3'-2"	8#8	#4@12	

COLUMN FOOTING SCHEDULE
(SEE DETAIL ON DWG NO. 793P-C09)

MARK	SIZE L	SIZE W	SIZE T	REINFORCING BOTTOM	REINFORCING TOP	REMARKS
F1	9'-3"	9'-3"	2'-0"	#8@12	#8@12	
F2	6'-6"	6'-6"	1'-6"	#8@12	#8@12	

REV.	BY / DATE	CHK'D / DATE	DESCRIPTION	PROJ ENGR / DATE	SURV ENGR / DATE
E	BJM / 5/5/03	– / –	2003 PERMIT RENEWAL	– / –	JH / 5/5/03
D	DBB / 7/28/98	– / –	ISSUED FOR B PERMIT RENEWAL APPLICATION	– / –	– / –
C	EMH / 4/29/98	PJS / 4/29/98	AS BUILT FOR CQA PACKAGE	DL / 4/29/98	PJS / 4/29/98
B	JZ / 5/1/98	PJS / 5/8/98	REVISED DRAWING FOR MAY 1998 SUBMISSION TO IDEQ	DL / 5/8/98	PJS / 5/8/98
A	JZ / 1/28/97	MFP / 1/28/97	ESII PERMIT ISSUE	DL / 1/28/97	DDC / 1/28/97

US Ecology Idaho
an American Ecology company

SITE B
GRAND VIEW, IDAHO
US EPA ID NO. IDD 073 114 654

TITLE:
CIVIL
CONTAINMENT BUILDING (STABILIZATION AREA)
FOUNDATION PLAN

DRAWN BY: JZ / DATE	SCALE:	FILE CODE PRMICOSE	REV. NO.
CHECKED / DATE	ENGINEER / DATE	DWG. NO. 793P-C05	E
PROJ. MGR. / DATE	APPROVED / DATE	PROJ. NO. PRMI	

DWG. NO. 793P-C06
PROJ. NO. PRMI

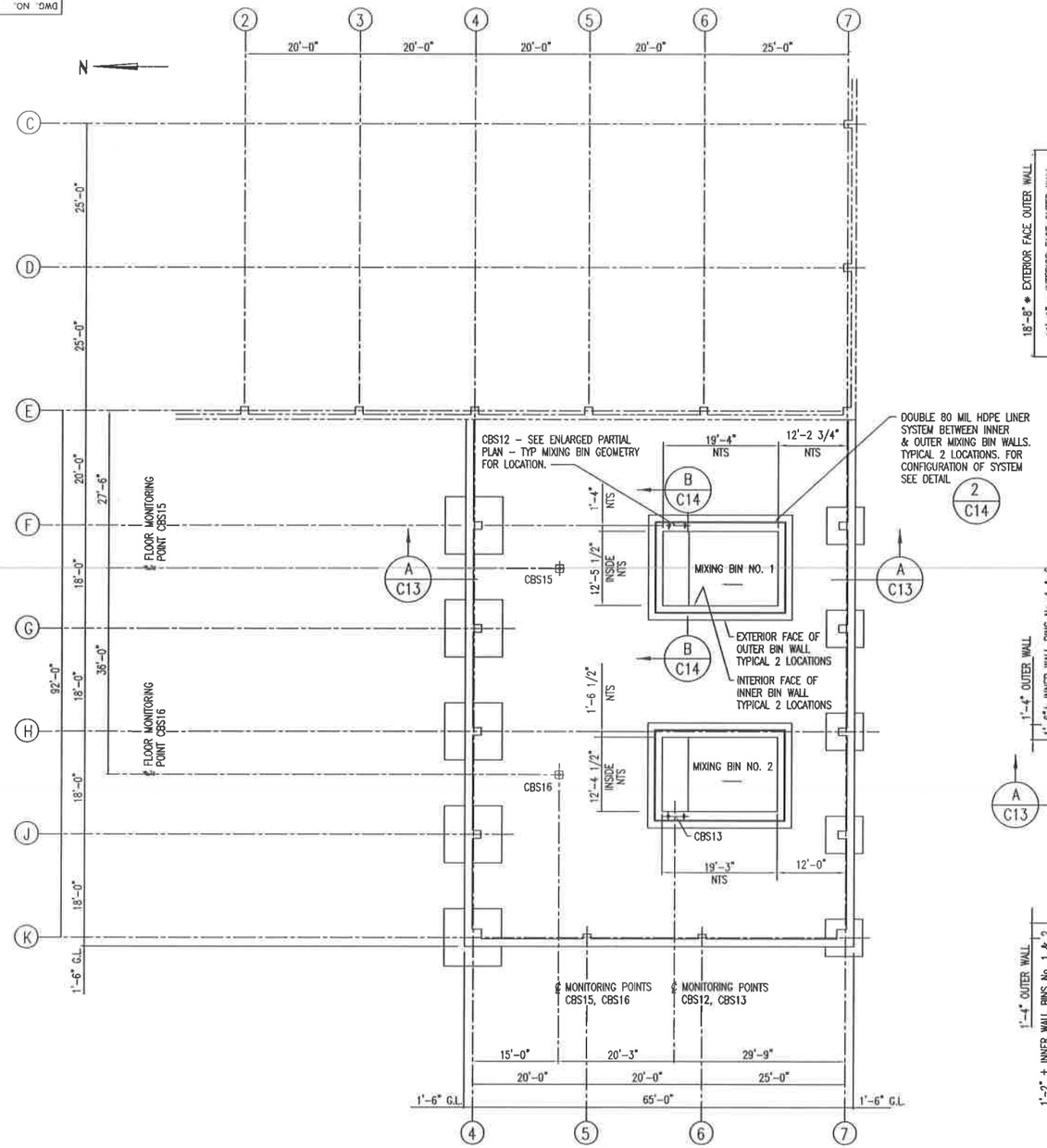

FOUNDATION PLAN @ MIXING BINS

SCALE: 3/32" = 1'-0"

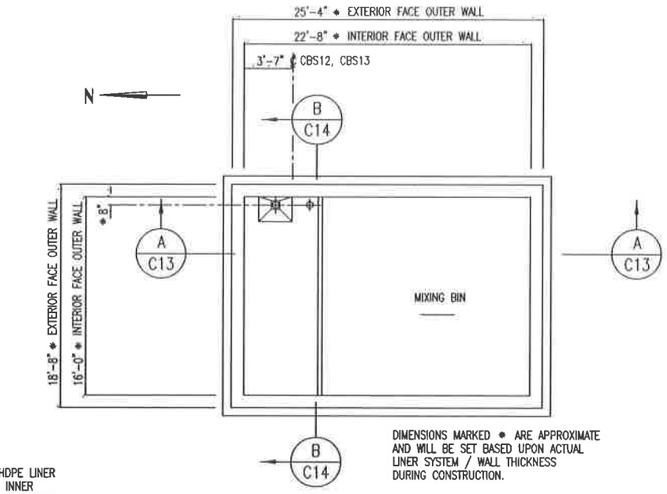

ENLARGED PARTIAL PLAN @ TYP OUTER BASE SLAB

SCALE: 3/16" = 1'-0"

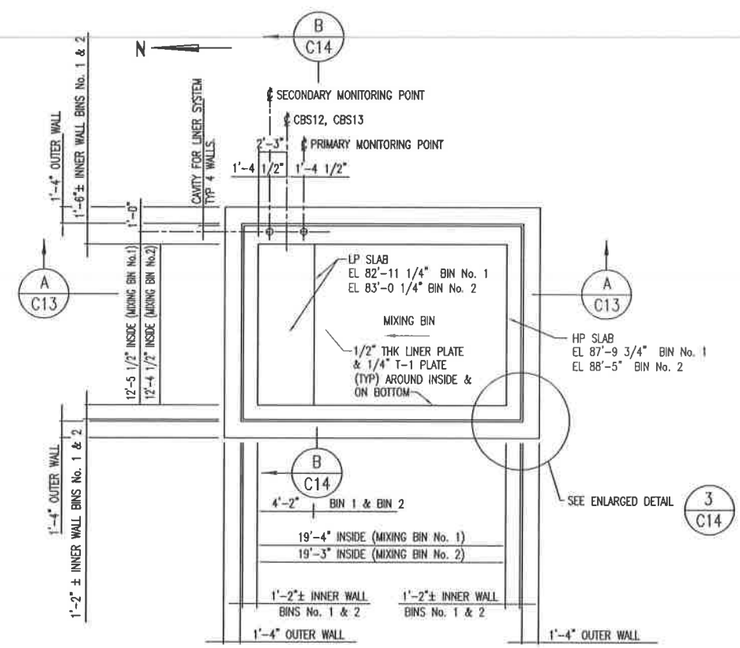

ENLARGED PARTIAL PLAN – TYP MIXING BIN GEOMETRY

SCALE: 3/16" = 1'-0"

NOTE:

PERIMETER BLDG WALLS AND FOOTINGS SHOWN FOR REFERENCE ONLY. SEE DRAWING C05 FOR FOUNDATION PLAN AND APPLICABLE REFERENCES.

GRAPHIC SCALES

3/32"=1'-0" 8' 4' 0' 8' 16'

3/16"=1'-0" 4' 2' 0' 4' 8'

REFERENCE DRAWINGS

DWG NO.	TITLE
C01	GENERAL NOTES & LEGEND
C05	SB – FOUNDATION PLAN
C06	SB – FOUNDATION PLAN @ MIXING BINS
C07	SB – LINER PLAN
C08	SB – SLAB PLAN
C09	SB – FOUNDATIONS SECTIONS & DETAILS
C10	SB – MIXING BIN LINER PLATE – SECTIONS & DETAILS
C11	SB – MIXING BIN LINER PLATE – SECTIONS & DETAILS
C12	SB – MIXING BIN – SECTIONS & DETAILS
C13	SB – MIXING BINS SECTIONS & DETAILS
C14	SB – MIXING BINS SECTIONS & DETAILS
C15	SB – SLAB SECTIONS & DETAILS
C16	SB – SLAB SECTIONS & DETALS
C17	SB – EQUIPMENT FOUNDATION PLANS
C18	SB – WATER TANK FOUNDATION PLAN

REV.	BY / DATE	CHK'D / DATE	DESCRIPTION	PROJ. ENGR / DATE	SUPV ENGR / DATE
E	BAB 4/22/03		2003 PERMIT RENEWAL		AI 4/22/03
D	DBB 1/28/99	–	ISSUED FOR B PERMIT RENEWAL APPLICATION	–	–
C	EMH 4/29/98	PAS 4/29/98	AS BUILT FOR CQA PACKAGE	EL 4/29/98	PAS 4/29/98
B	JZ 3/1/98	PAS 3/9/98	REVISED DRAWING FOR MAY 1998 SUBMISSION TO IDEQ	EL 3/9/98	PAS 3/9/98
A	TLZ 1/28/97	NFP 1/28/97	ESII PERMIT ISSUE	EL 1/28/97	EDC 1/28/97

USEcology Idaho
an American Ecology company

SITE B
GRAND VIEW, IDAHO
US EPA ID NO. IDD 073 114 654

TITLE:
CIVIL
CONTAINMENT BUILDING (STABILIZATION AREA)
FOUNDATION PLAN @ MIXING BINS

DRAWN BY: TLZ	DATE	SCALE:	FILE CODE PRMIC06E
CHECKED	DATE	ENGINEER	DATE
PROJ. MGR.	DATE	APPROVED	DATE

DWG. NO. 793P-C06
PROJ. NO. PRMI
REV. NO. E

DWG. NO. 793P-C07
PROJ. NO. PRMI

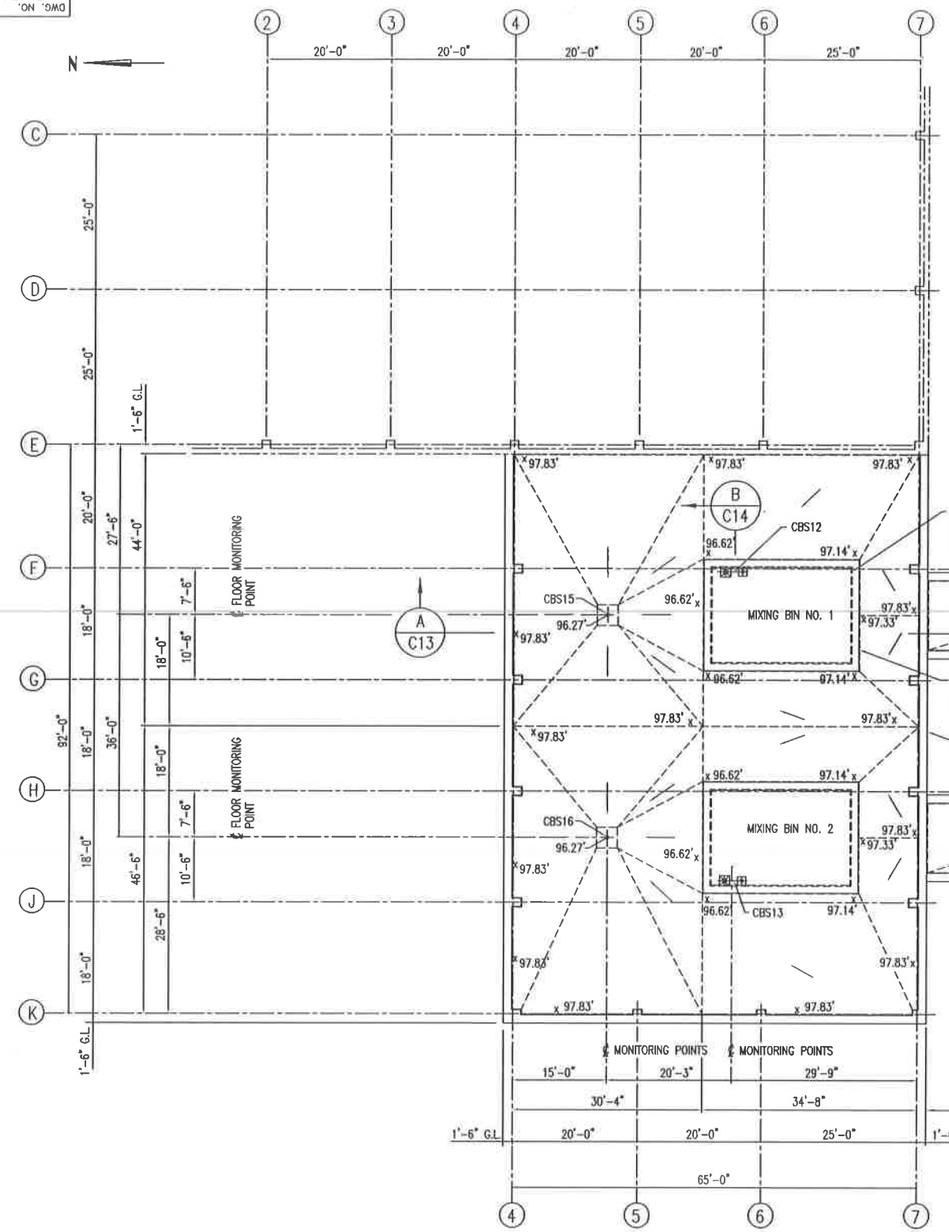

PLAN @ LINER

8' 4' 0' 8' 16'

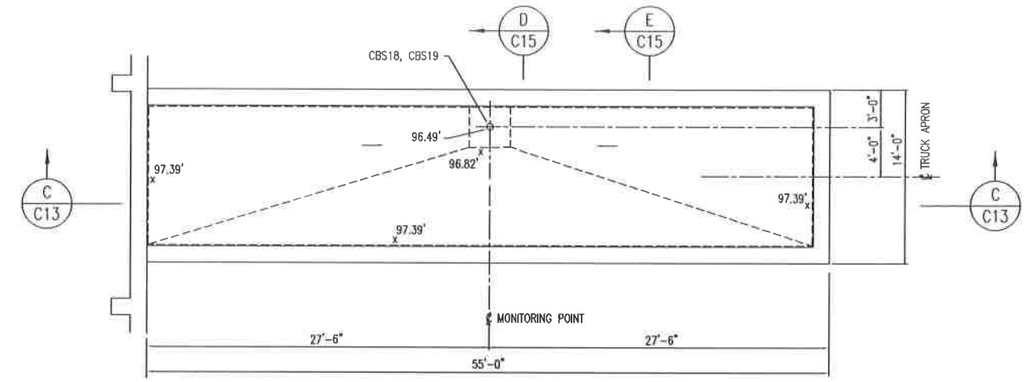

ENLARGED PARTIAL PLAN – LINER BELOW TRUCK APRON

4' 2' 0' 4' 8'

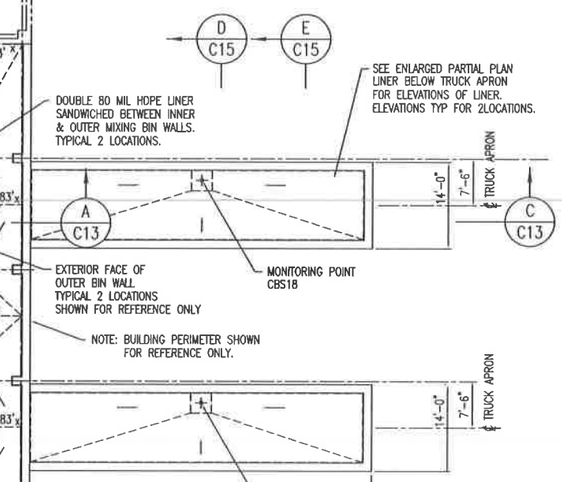

LEGEND:

- - - - - DENOTES EDGES OF HDPE LINER

x 97.83' DENOTES LINER ELEVATION

NOTE: PERIMETER BLDG WALLS AND FOOTINGS SHOWN FOR REFERENCE ONLY. SEE DRAWING C05 FOR FOUNDATION PLAN AND APPLICABLE REFERENCES.

REFERENCE DRAWINGS

DWG NO.	TITLE
C01	GENERAL NOTES & LEGEND
C05	FOUNDATION PLAN
C06	FOUNDATION PLAN @ MIXING BINS
C08	SLAB PLAN
C13	MIXING BIN SECTIONS & DETAILS
C14	MIXING BIN SECTIONS & DETAILS
C15	SLAB SECTION & DETAILS

REV.	BY / DATE	CHK'D / DATE	DESCRIPTION	PROJ ENGR / DATE	SUPV ENGR / DATE
E	RAM 3/1/03	- -	2003 PERMIT RENEWAL	- -	JH 3/1/03
D	CBB 7/25/99	- -	ISSUED FOR B PERMIT RENEWAL APPLICATION	- -	- -
C	EBH 4/29/98	RJS 4/29/98	AS BUILT FOR CQA PACKAGE	DL 4/29/98	RJS 4/29/98
B	CHE 5/1/98	RJS 5/5/98	REVISED DRAWING FOR MAY 1998 SUBMISSION TO IDEQ	DL 5/5/98	RJS 5/5/98
A	TLZ 3/26/97	MFP 3/26/97	ESII PERMIT ISSUE	DL 3/26/97	DDC 3/26/97

US Ecology Idaho
an American Ecology company

SITE B
GRAND VIEW, IDAHO
US EPA ID NO. IDD 073 114 654

TITLE:
CIVIL
CONTAINMENT BUILDING (STABILIZATION AREA)
LINER PLAN

DRAWN BY: TLZ	DATE	SCALE:		FILE CODE PRMICO7E	REV. NO.
CHECKED	DATE	ENGINEER	DATE	DWG. NO. 793P-C07	E
PROJ. MGR.	DATE	APPROVED	DATE	PROJ. NO. PRMI	

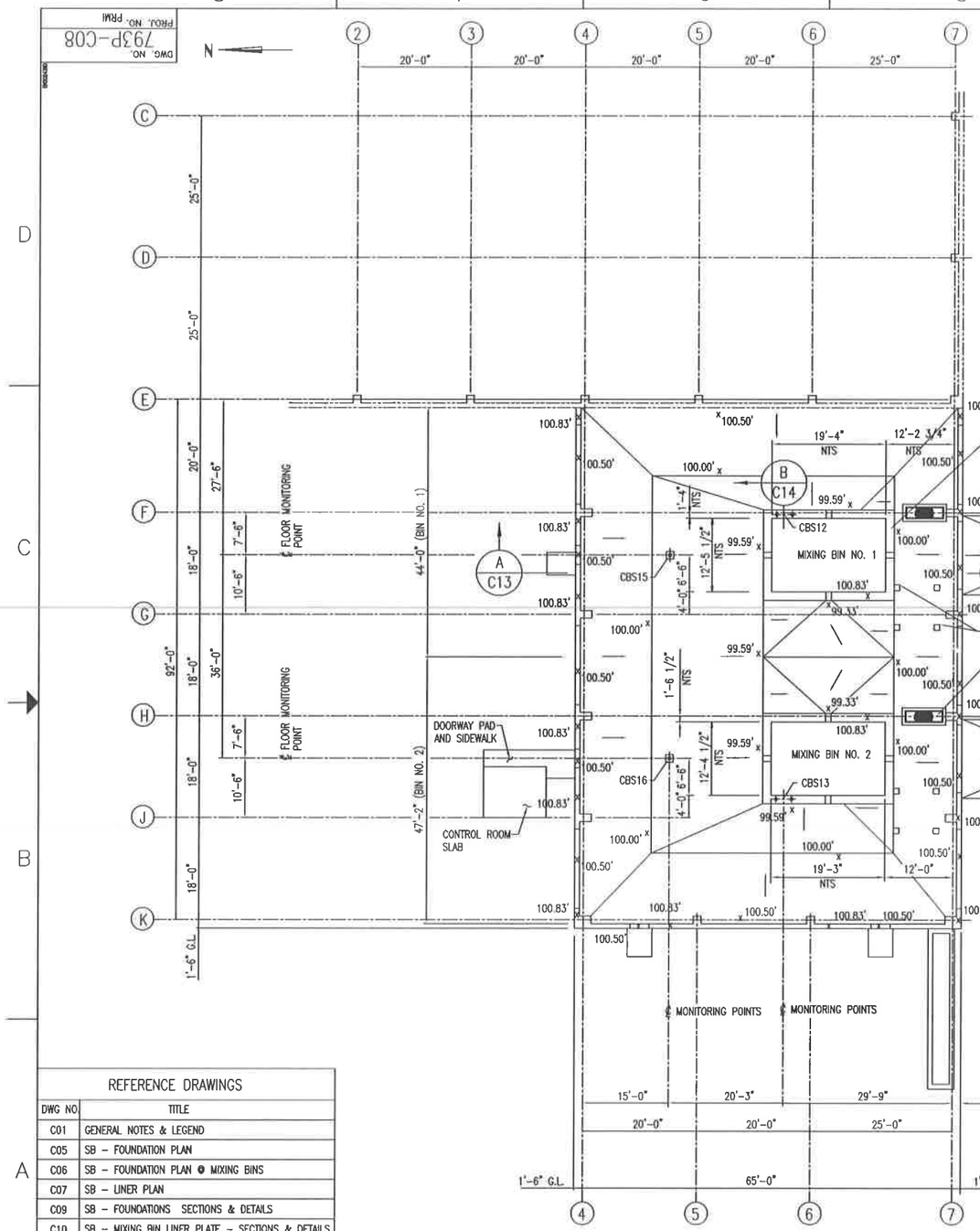

SLAB PLAN FOR CONTAINMENT

8' 4' 0' 8' 16'

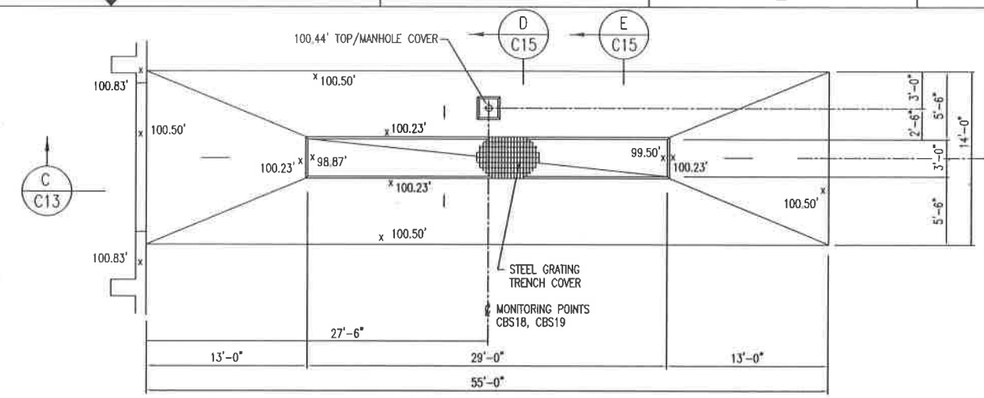

PARTIAL PLAN – SLAB AT TRUCK APRON

4' 2' 0' 4' 8'

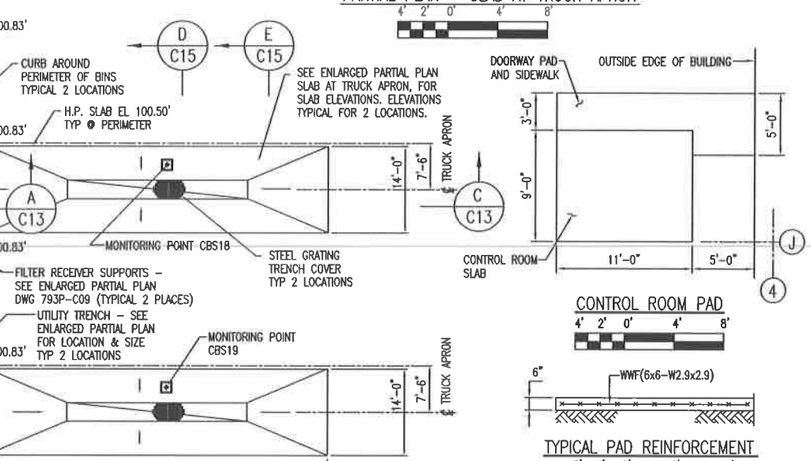

CONTROL ROOM PAD

4' 2' 0' 4' 8'

TYPICAL PAD REINFORCEMENT

8' 4' 0' 8' 16'

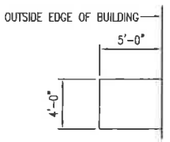

MANDOOR PAD

4' 2' 0' 4' 8'

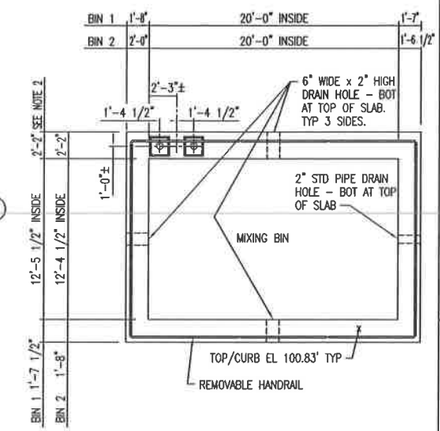

ENLARGED PARTIAL PLAN – CURB AROUND BINS

SCALE: NTS

1. BIN 1: AS SHOWN
2. BIN 2: E & W SIDES, OPPOSITE HAND

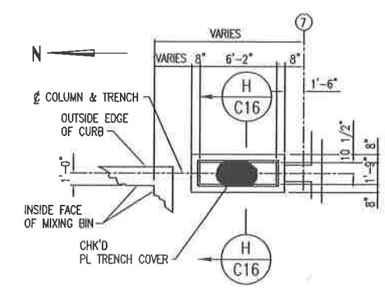

ENLARGED PARTIAL PLAN – UTILITY TRENCH

4' 2' 0' 4' 8'

REFERENCE DRAWINGS

DWG NO	TITLE
C01	GENERAL NOTES & LEGEND
C05	SB – FOUNDATION PLAN
C06	SB – FOUNDATION PLAN @ MIXING BINS
C07	SB – LINER PLAN
C09	SB – FOUNDATIONS SECTIONS & DETAILS
C10	SB – MIXING BIN LINER PLATE – SECTIONS & DETAILS
C11	SB – MIXING BIN LINER PLATE – SECTIONS & DETAILS
C12	SB – MIXING BIN – SECTIONS & DETAILS
C13	SB – MIXING BINS SECTIONS & DETAILS
C14	SB – MIXING BINS SECTIONS & DETAILS
C15	SB – SLAB SECTIONS & DETAILS
C16	SB – SLAB SECTIONS & DETAILS
C17	SB – EQUIPMENT FOUNDATION PLANS
C18	SB – WATER TANK FOUNDATION PLAN

REV.	BY / DATE	CHK'D / DATE	DESCRIPTION	PROJ ENGR / DATE	SUPV ENGR / DATE
E	RJM 5/5/03	– –	2003 PERMIT RENEWAL	– –	JH 5/5/03
D	BBB 7/28/98	– –	ISSUED FOR B PERMIT RENEWAL APPLICATION	– –	– –
C	DAH 8/29/98	PJS 8/29/98	AS BUILT FOR CQA PACKAGE	DL 8/29/98	PJS 8/29/98
B	JZ 5/1/98	PJS 5/8/98	REVISED DRAWING FOR MAY 1998 SUBMISSION TO IDEQ	DL 5/8/98	PJS 5/8/98
A	TLZ 1/28/97	MFP 1/28/97	ESII PERMIT ISSUE	DL 1/28/97	BBC 1/28/97

US Ecology Idaho
an American Ecology company

SITE B
GRAND VIEW, IDAHO
US EPA ID NO. IDD 073 114 654

TITLE:
CIVIL
CONTAINMENT BUILDING (STABILIZATION AREA)
SLAB PLAN

DRAWN BY: TLZ	DATE	SCALE:	FILE CODE PRMCOBE	REV. NO.
CHECKED	DATE	ENGINEER DATE	DWG. NO. 793P-C08	E
PROJ. MGR.	DATE	APPROVED DATE	PROJ. NO. PRMI	

DWG. NO. 793P-C09
PROJ. NO. PRMI

REFERENCE DRAWINGS	
DWG NO.	TITLE
C01	GENERAL NOTES & LEGEND
C05	SB – FOUNDATION PLAN
C06	SB – FOUNDATION PLAN @ MIXING BINS
C07	SB – LINER PLAN
C08	SB – SLAB PLAN
C10	SB – MIXING BIN LINER PLATE – SECTIONS & DETAILS
C11	SB – MIXING BIN LINER PLATE – SECTIONS & DETAILS
C12	SB – MIXING BIN – SECTIONS & DETAILS
C13	SB – MIXING BINS SECTIONS & DETAILS
C14	SB – MIXING BINS SECTIONS & DETAILS
C15	SB – SLAB SECTIONS & DETAILS
C16	SB – SLAB SECTIONS & DETAILS
C17	SB – EQUIPMENT FOUNDATION PLANS
C18	SB – WATER TANK FOUNDATION PLAN

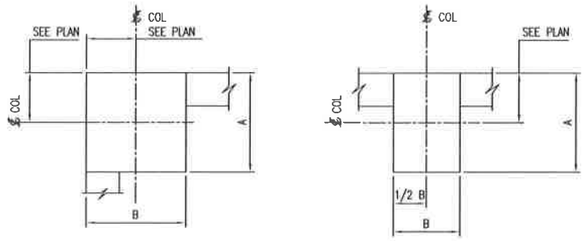

TYPE A

TYPE B

PIER TYPE DETAILS

SCALE: NONE

a. SEE PLAN FOR ORIENTATION.
b. SEE SCHEDULE ON DWG NO. 793P-C05.
c. CHAMFER EXPOSED VERTICAL CORNERS.
d. FOR ANCHOR BOLT LOCATION, SEE DWG NO. 793P-S06.
e. CONTINUE THE HORIZONTAL BARS FROM THE PERIMETER WALL THRU THE PIER.

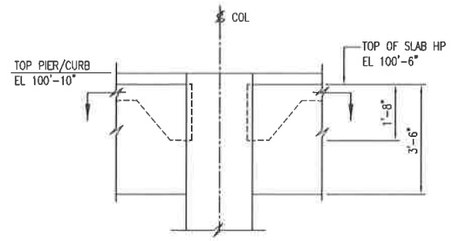

ELEVATION

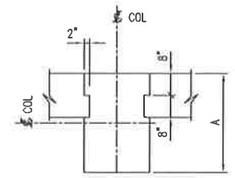

SECTION

SHEAR KEY DETAIL

SCALE: NONE

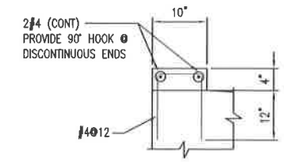

CURB REINFORCING DETAIL

(EXCEPT DOOR OPENINGS)
SCALE: NONE

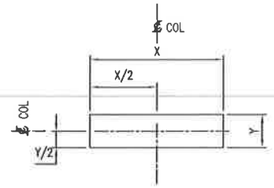

TYPE 1

SHEAR KEY TYPE DETAILS

SCALE: NONE

a. SEE PLAN FOR ORIENTATION.
b. SEE SCHEDULE ON DWG NO. 793P-C05.

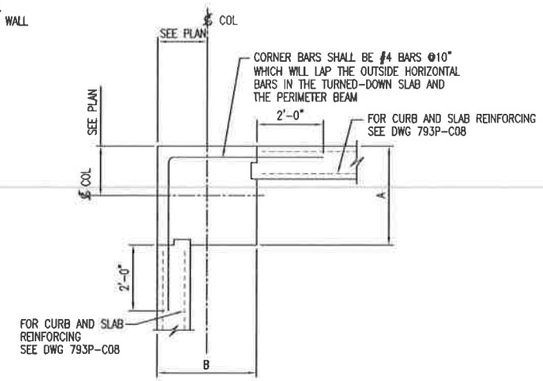

CORNER BAR DETAIL @ K4 & K7

SCALE: NONE

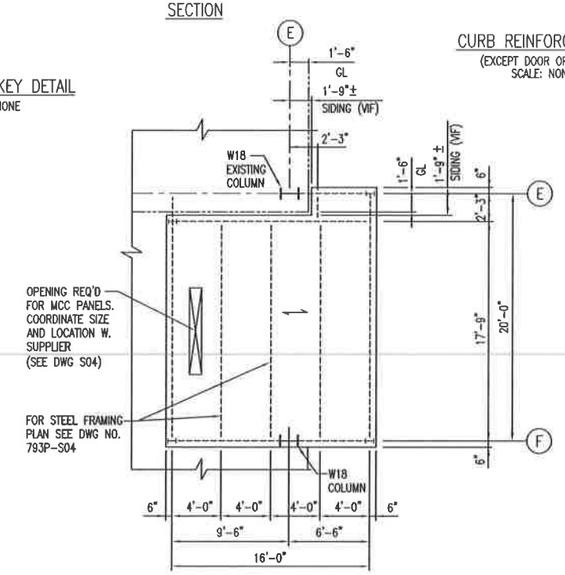

EQUIPMENT ROOM SLAB PLAN

TOC EL 124'-10" (UN)

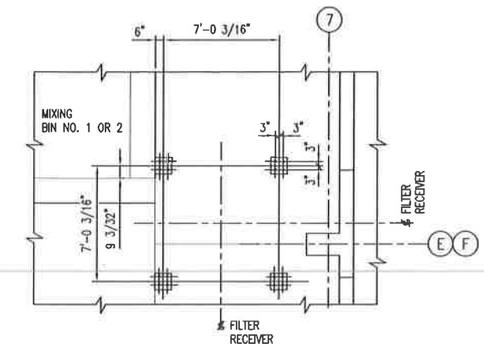

ENLARGED PARTIAL PLAN

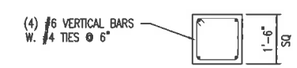

PIER REINFORCING DETAIL

NOTES:
1. DRILL AND EPOXY GROUT (4) #6 VERTICAL BARS INTO FLOOR SLAB – EMB 8" (MIN).
2. PLACE FIRST HORIZONTAL TIE 2" FROM TOP OF PIER.
3. CHAMFER (3/4"x3/4") CORNERS.
4. TOP OF PIER EL 101'-4".
5. ANCHOR BOLTS SHALL BE PROVIDED BY EQUIPMENT MANUFACTURER.

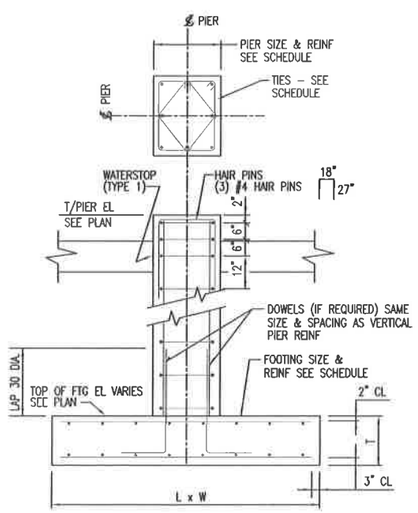

TYPICAL COLUMN FOOTING & PIER DETAIL

SCALE: NONE

a. SEE SCHEDULES ON DWG NO. 793P-C05.

8-VERT BAR
PIER P1

8-VERT BAR
PIER P2

PIER REINFORCING DETAILS

SCALE: NONE

a. SEE SCHEDULE ON DWG NO. 793P-C05.

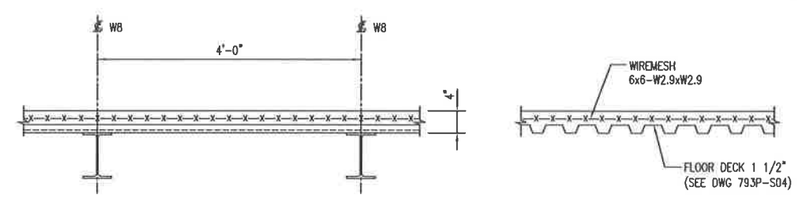

EQUIPMENT ROOM SLAB DETAILS

GRAPHIC SCALES:

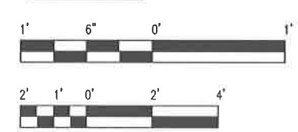

REV.	BY / DATE	CHK'D / DATE	DESCRIPTION	PROJ ENGR / DATE	SUPV ENGR / DATE
E	RJM / 5/5/03	– / –	2003 PERMIT RENEWAL	– / –	JH / 5/5/03
D	DBB / 7/28/98	– / –	ISSUED FOR B PERMIT RENEWAL APPLICATION	– / –	– / –
C	EMH / 4/29/98	RJS / 4/29/98	AS BUILT FOR CQA PACKAGE	EL / 4/29/98	RJS / 4/29/98
B	JZ / 5/1/98	RJS / 5/8/98	REVISED DRAWING FOR MAY 1998 SUBMISSION TO IDEQ	EL / 5/8/98	RJS / 5/8/98
A	JZ / 1/28/97	MFF / 1/28/97	ESII PERMIT ISSUE	EL / 1/28/97	DDC / 1/28/97

US Ecology Idaho
an American Ecology company

SITE B
GRAND VIEW, IDAHO
US EPA ID NO. IDD 073 114 654

TITLE: CIVIL
CONTAINMENT BUILDING (STABILIZATION AREA)
FOUNDATION SECTIONS AND DETAILS – SHT 1

DRAWN BY: JZ	DATE	SCALE:	FILE CODE PRMIC09E	REV. NO.
CHECKED	DATE	ENGINEER DATE	DWG. NO. 793P-C09	E
PROJ. MGR.	DATE	APPROVED DATE	PROJ. NO. PRMI	

DWG. NO. 793C-C12
PROJ. NO. 793C

REFERENCE DRAWINGS	
DWG NO.	TITLE
C01	GENERAL NOTES & LEGEND
C05	FOUNDATION PLAN
C06	FOUNDATION PLAN @ MIXING BINS
C07	LINER PLAN
C08	SLAB PLAN
C10	MIXING BIN LINER PLATE SECTIONS & DETAILS
C11	MIXING BIN LINER PLATE SECTIONS & DETAILS
C13	MIXING BIN SECTIONS & DETAILS
C14	MIXING BIN SECTIONS & DETAILS
C15	SLAB SECTIONS & DETAILS
C16	MISCELLANEOUS SECTIONS & DETAILS

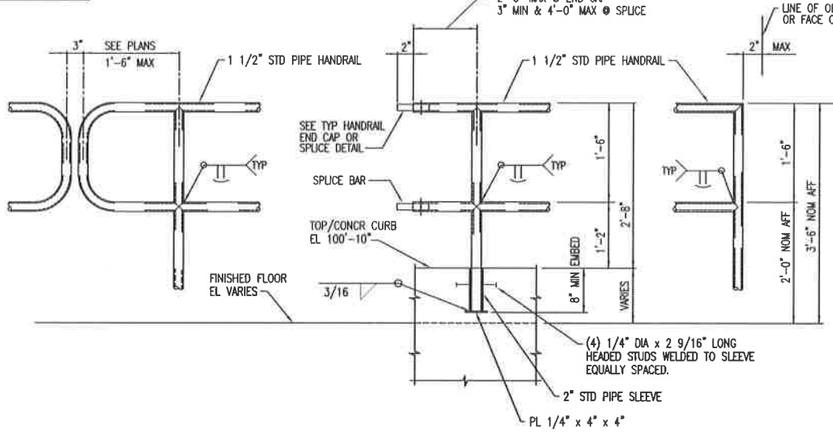

"P" END TERMINATION
SCALE: 1" = 1'-0"

PIPE HANDRAIL W/ EMBEDDED SLEEVE
SCALE: 1" = 1'-0"

SQUARE END TERMINATION
SCALE: 1" = 1'-0"

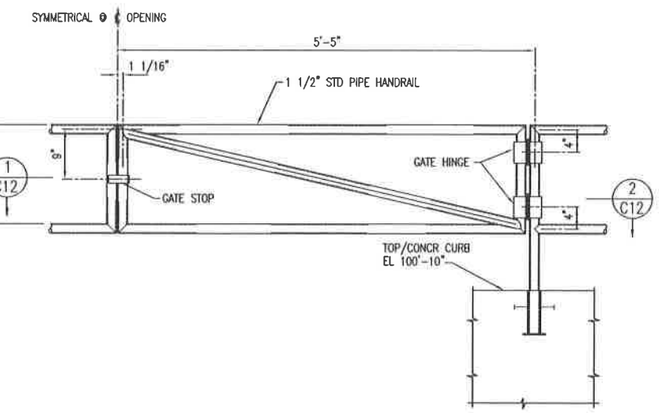

SWINGING GATE ARRANGEMENT
SCALE: 1" = 1'-0"

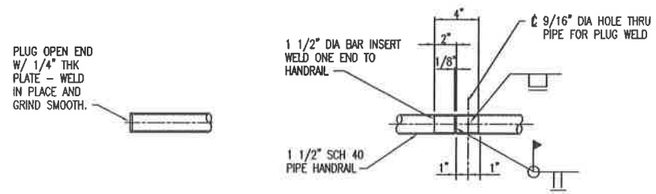

END CAP DETAIL
SCALE: 2" = 1'-0"

HANDRAIL SPLICE DETAIL
SCALE: 2" = 1'-0"

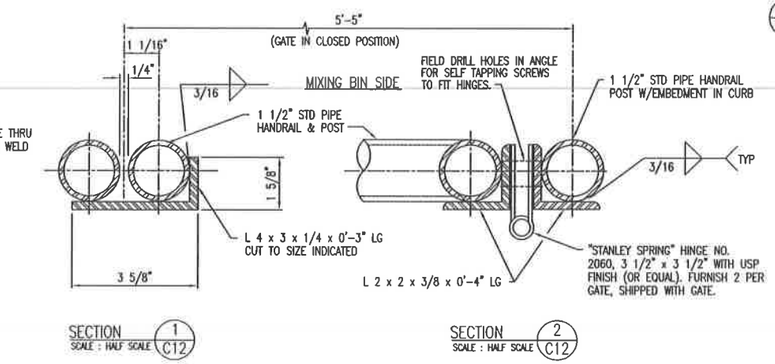

SECTION 1 C12
SCALE : HALF SCALE

SECTION 2 C12
SCALE : HALF SCALE

HANDRAIL & GATE DETAILS
SCALE: AS INDICATED

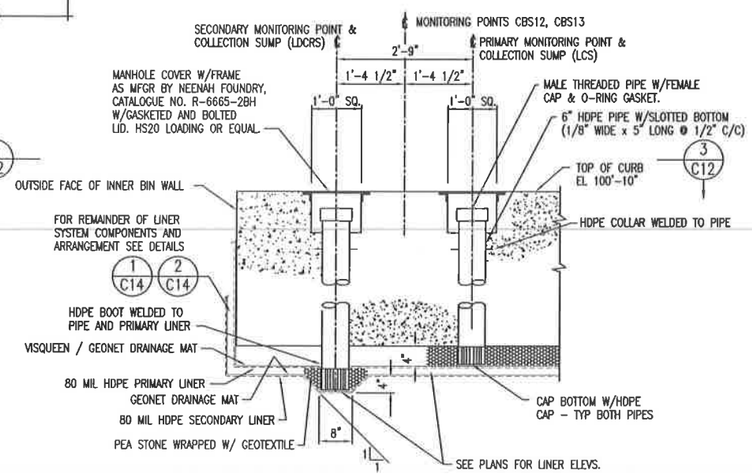

CONTAINMENT MONITORING SUMP @ MIXING BINS
SCALE: 3/4" = 1'-0"

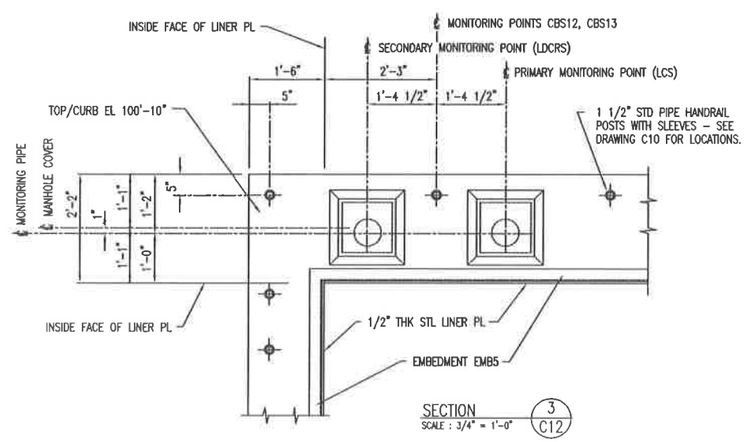

SECTION 3 C12
SCALE : 3/4" = 1'-0"

GRAPHIC SCALES

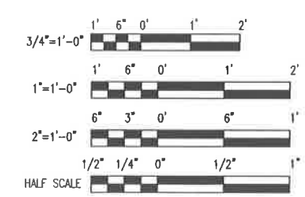

REV.	BY / DATE	CHK'D / DATE	DESCRIPTION	PROJ. ENGR. / DATE	SUPV. ENGR. / DATE
4	RJH / 5/9/03	– / –	2003 PERMIT RENEWAL	– / –	JH / 5/9/03
3	DBB / 07.29.00	– / –	ISSUED FOR B PERMIT RENEWAL APPLICATION	– / –	– / –
2	DBB / 06.29.99	PJS / 06.29.99	AS BUILT FOR COA PACKAGE	DL / 06.29.99	PJS / 06.29.99
1	JZ / 10.31.97	JVC / 10.31.97	REVISED GATE DIMENSIONS	DL / 10.31.97	DDC / 10.31.97
0	TLZ / 06.06.97	MFP / 06.06.97	ISSUED FOR CONSTRUCTION	DL / 06.06.97	DDC / 06.06.97
A	TLZ / 05.01.97	MFP / 05.01.97	ISSUED FOR BID	DL / 05.01.97	DDC / 05.01.97

USEcology Idaho
an American Ecology company

SITE B
GRAND VIEW, IDAHO
US EPA ID NO. IDD 073 114 654

TITLE:
CIVIL
CONTAINMENT BUILDING (STABILIZATION AREA)
TYPICAL MIXING BIN SECTIONS & DETAILS

DRAWN BY: TLZ	DATE 4/14/97	SCALE:	FILE CODE A21C0284	REV. NO.
CHECKED	DATE	ENGINEER	DATE	DWG. NO. 793C-C12
PROJ. MGR.	DATE	APPROVED	DATE	PROJ. NO. 793C
				4

DWG. NO. 793P-C13
PROJ. NO. PRMI

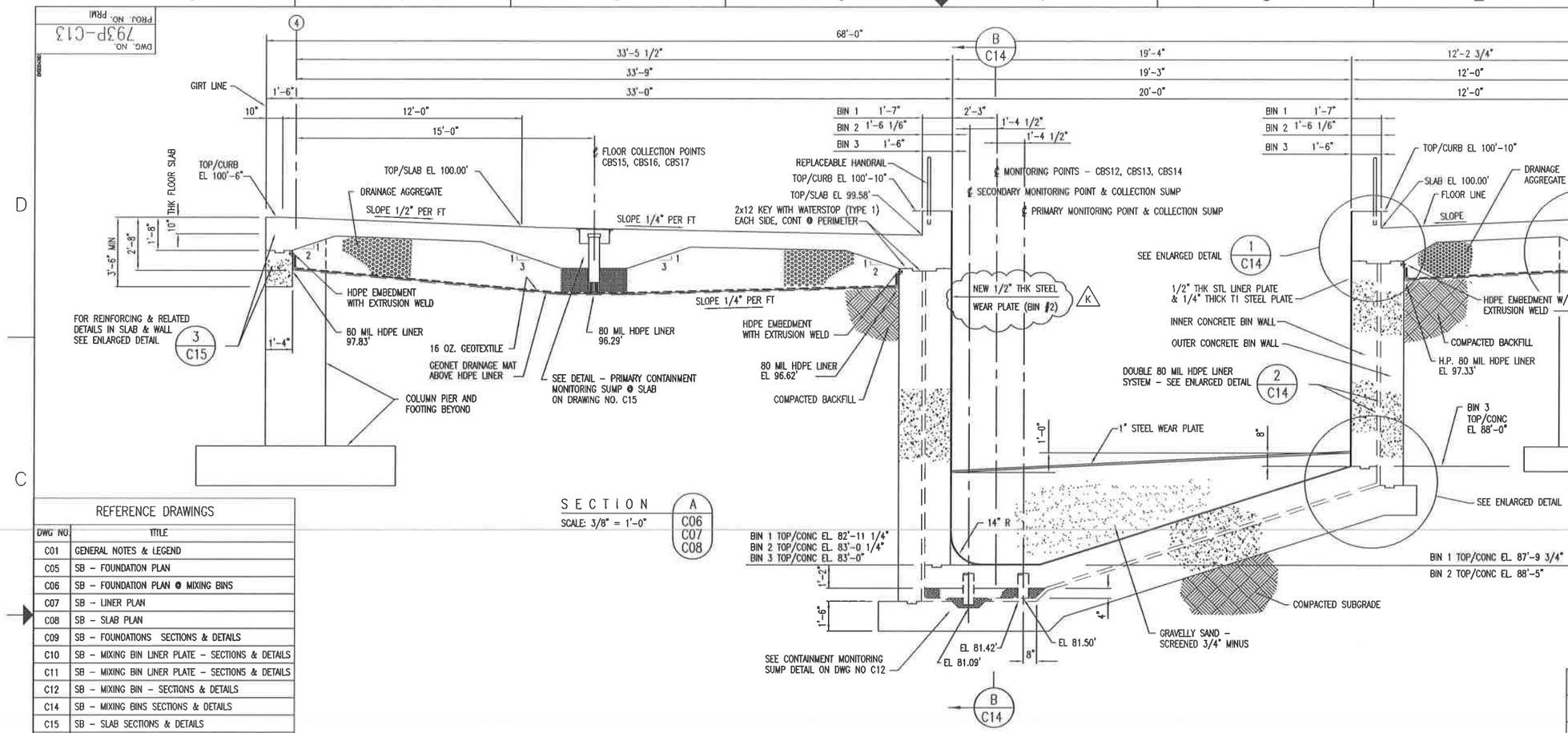

SECTION A (C06, C07, C08)
SCALE: 3/8" = 1'-0"

REFERENCE DRAWINGS	
DWG NO.	TITLE
C01	GENERAL NOTES & LEGEND
C05	SB - FOUNDATION PLAN
C06	SB - FOUNDATION PLAN @ MIXING BINS
C07	SB - LINER PLAN
C08	SB - SLAB PLAN
C09	SB - FOUNDATIONS SECTIONS & DETAILS
C10	SB - MIXING BIN LINER PLATE - SECTIONS & DETAILS
C11	SB - MIXING BIN LINER PLATE - SECTIONS & DETAILS
C12	SB - MIXING BIN - SECTIONS & DETAILS
C14	SB - MIXING BINS SECTIONS & DETAILS
C15	SB - SLAB SECTIONS & DETAILS
C16	SB - SLAB SECTIONS & DETAILS
C17	SB - EQUIPMENT FOUNDATION PLANS
C18	SB - WATER TANK FOUNDATION PLAN

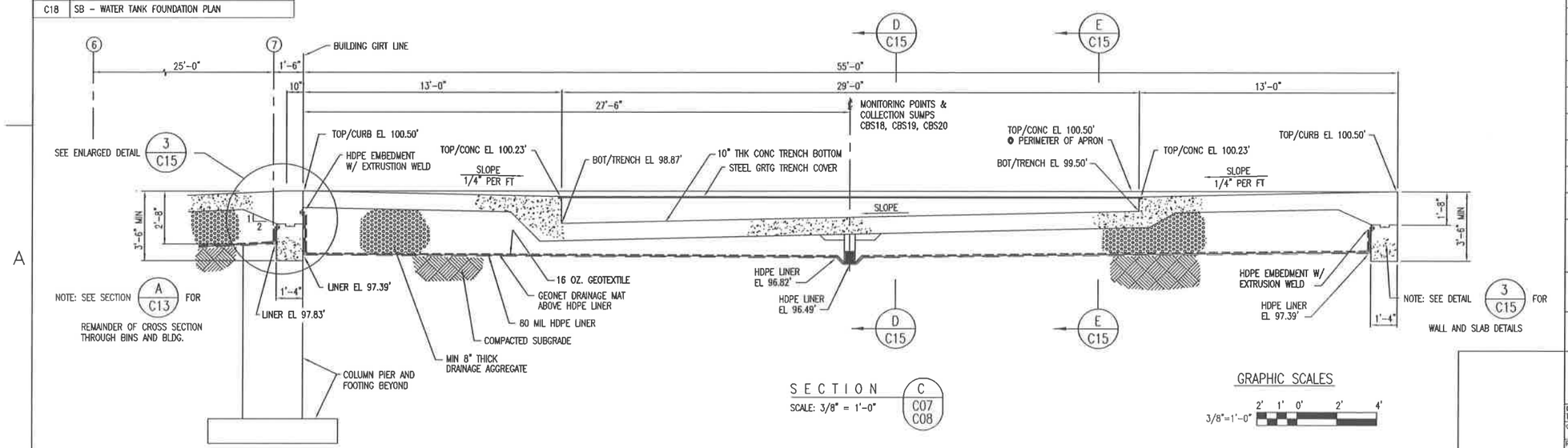

SECTION C (C07, C08)
SCALE: 3/8" = 1'-0"

GRAPHIC SCALES
3/8"=1'-0" 2' 1' 0' 2' 4'

REV.	BY / DATE	CHK'D / DATE	DESCRIPTION	PROJ. ENGR / DATE	SURV. ENGR / DATE
L	RJM 4/22/03	- -	2003 PERMIT RENEWAL	- -	JH 4/22/03
K	MK 4/2/01	- -	REVISED DRAWING FOR MAY 1998 SUBMISSION TO IDEQ	- -	MRS 4/2/01
J	JS/SWWD	- -	REPLACED STEEL WEAR PLATE-BIN#2	- -	JHP 1/11/00
H	AP/CDM 03/23/99	- -	AS BUILT FOR BIN 2	- -	- -
G	EMH 9/15/98	PJS 9/15/98	AS BUILT FOR BIN 1	- -	PJS 9/15/98
F	EMH 8/31/98	PJS 8/31/98	ADDED NEW BOTTOM WEAR PLATE	- -	PJS 8/31/98
E	DBB 7/28/98	- -	ISSUED FOR B PERMIT RENEWAL APPLICATION	- -	PJS 7/28/98
D	EMH 4/29/98	PJS 4/29/98	AS BUILT FOR CQA PACKAGE	DL 4/29/98	PJS 4/29/98
C	JZ 5/1/98	PJS 5/8/98	REVISED DRAWING FOR MAY 1998 SUBMISSION TO IDEQ	DL 5/8/98	PJS 5/8/98
B	JZ 6/8/97	MFP 6/8/97	ESII NOD RESPONSE	DL 6/8/97	DDC 6/8/97
A	TLZ 3/28/97	MFP 3/28/97	ESII PERMIT ISSUE	DL 3/28/97	DDC 3/28/97

USEcology Idaho
an American Ecology company

SITE B
GRAND VIEW, IDAHO
US EPA ID NO. IDD 073 114 654

TITLE:
CIVIL
CONTAINMENT BUILDING (STABILIZATION AREA)
MIXING BIN SECTIONS

DRAWN BY: TLZ	DATE	SCALE: 3/8"=1'-0"	FILE CODE PRMIC13L	REV. NO.
CHECKED	DATE	ENGINEER DATE	DWG. NO. 793P-C13	L
PROJ. MGR.	DATE	APPROVED DATE	PROJ. NO. PRMI	

DWG. NO. 793P-C14
PROJ. NO. PRMI

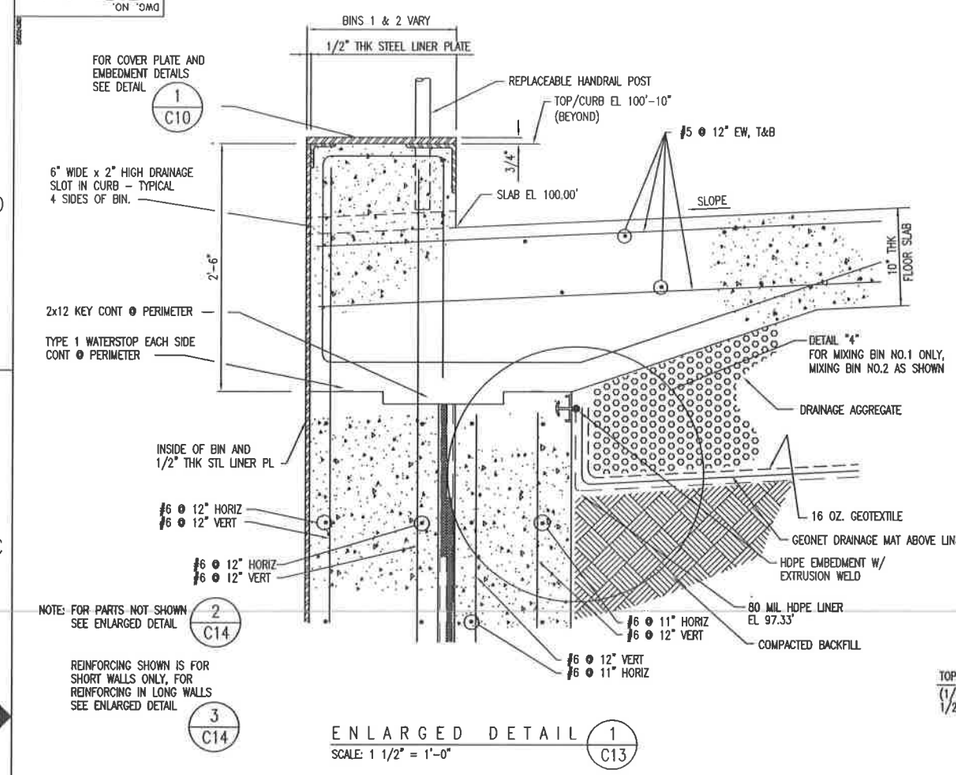

ENLARGED DETAIL 1/C13
SCALE: 1 1/2" = 1'-0"

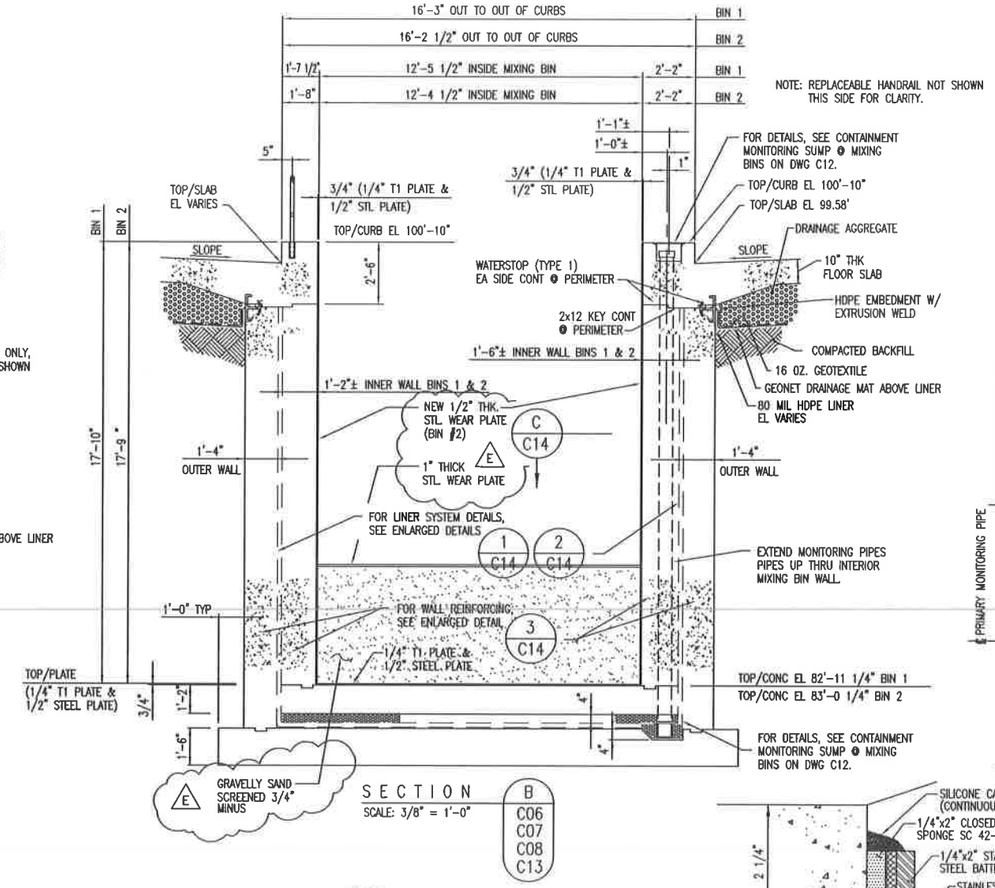

SECTION B C06 C07 C08 C13
SCALE: 3/8" = 1'-0"

REFERENCE DRAWINGS	
DWG NO.	TITLE
C01	GENERAL NOTES & LEGEND
C05	FOUNDATION PLAN
C06	FOUNDATION PLAN @ MIXING BINS
C07	LINER PLAN
C08	SLAB PLAN
C10	MIXING BIN LINER PLATE SECTIONS & DETAILS
C11	MIXING BIN LINER PLATE SECTIONS & DETAILS
C12	MIXING BIN SECTIONS & DETAILS
C13	MIXING BIN SECTIONS & DETAILS
C15	SLAB SECTION & DETAILS
C16	MISCELLANEOUS SECTIONS & DETAILS

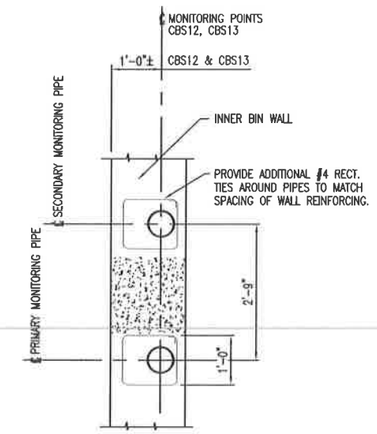

SECTION C/C14
SCALE: 3/4" = 1'-0"

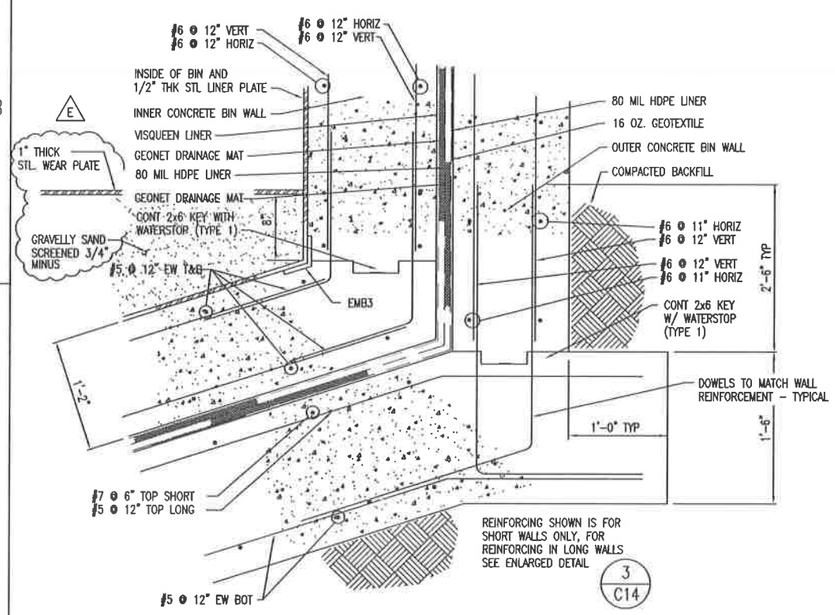

ENLARGED DETAIL 2/C13
SCALE: 1 1/2" = 1'-0"

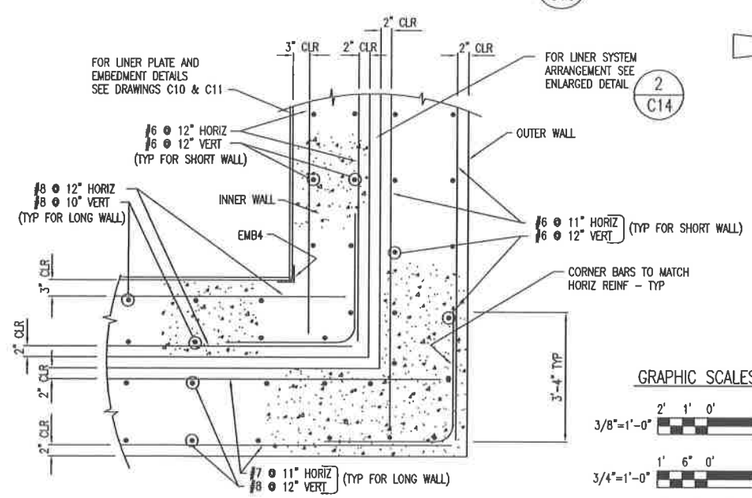

ENLARGED DETAIL 3/C14
SCALE: 1" = 1'-0"

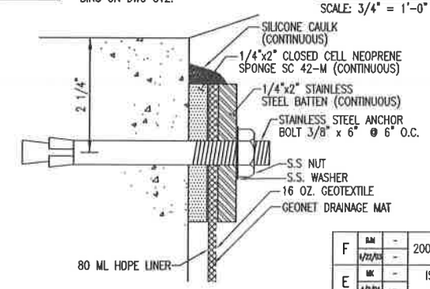

DETAIL 4/C14
SCALE: NTS

GRAPHIC SCALES

3/8"=1'-0" 2' 1' 0' 2' 4'
3/4"=1'-0" 1' 6" 0' 1' 2'
1"=1'-0" 1' 6" 0' 1' 2'
1 1/2"=1'-0" 1' 6" 0' 1'

REV.	BY / DATE	CHK'D / DATE	DESCRIPTION	ENGR / DATE	ENGR / DATE
F	BJM 4/22/03	– –	2003 PERMIT RENEWAL	– –	JH 4/22/03
E	MK 4/2/01	– –	ISSUED IN RESPONSE TO NOD LETTER DATED JUNE 30, 1999	– –	MRS 4/2/01
D	CBB 7/28/98	– –	ISSUED FOR B PERMIT RENEWAL APPLICATION	– –	– –
C	BMH 4/29/98	PJS 4/29/98	AS BUILT FOR CQA PACKAGE	EL 4/29/98	PJS 4/29/98
B	JZ 5/1/98	PJS 5/1/98	REVISED DRAWING FOR MAY 1998 SUBMISSION TO IDEQ	EL 5/1/98	PJS 5/1/98
A	TLZ 1/28/97	MFP 1/28/97	ESII PERMIT ISSUE	EL 1/28/97	BDC 1/28/97

USEcology Idaho
an American Ecology company

SITE B
GRAND VIEW, IDAHO
US EPA ID NO. IDD 073 114 654

TITLE: CIVIL
CONTAINMENT BUILDING (STABILIZATION AREA)
SECTIONS & DETAILS

DRAWN BY: DATE	SCALE:	FILE CODE PRIMC14F	REV. NO.
TLZ 3/17/97	3/8"=1'-0"	DWG. NO. 793P-C14	F
CHECKED DATE TLZ 4/30/97	ENGINEER DATE		
PROJ. MGR. DATE	APPROVED DATE	PROJ. NO. PRMI	

DWG. NO. 793P-C15
PROJ. NO. PRMI

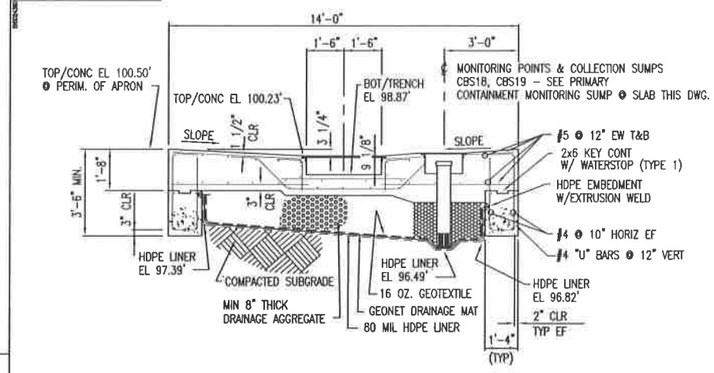

SECTION D (C07, C08, C13)
SCALE: 3/8" = 1'-0"

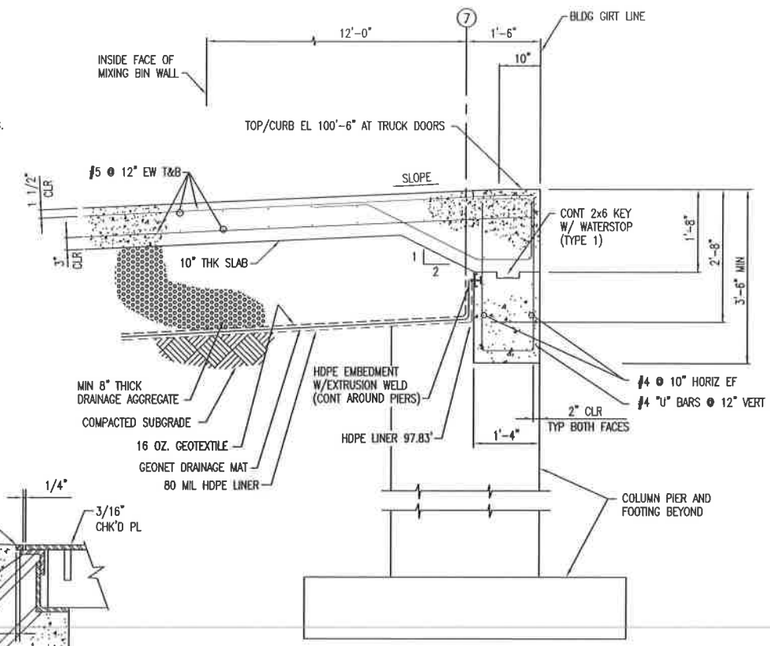

ENLARGED DETAIL 3 (C13, C15)
SCALE: 3/4" = 1'-0"

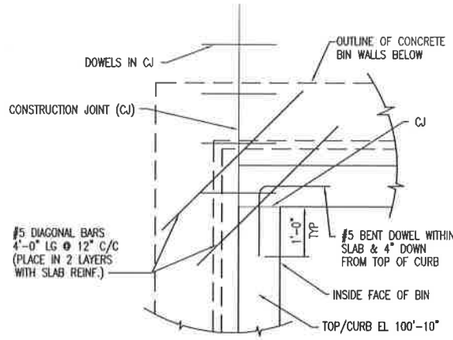

TYPICAL CJ REINFORCING @ INSIDE SLAB CORNERS
SCALE: 3/4" = 1'-0"

REFERENCE DRAWINGS	
DWG NO.	TITLE
C01	GENERAL NOTES & LEGEND
C05	SB – FOUNDATION PLAN
C06	SB – FOUNDATION PLAN @ MIXING BINS
C07	SB – LINER PLAN
C08	SB – SLAB PLAN
C09	SB – FOUNDATIONS SECTIONS & DETAILS
C10	SB – MIXING BIN LINER PLATE – SECTIONS & DETAILS
C11	SB – MIXING BIN LINER PLATE – SECTIONS & DETAILS
C12	SB – MIXING BIN – SECTIONS & DETAILS
C13	SB – MIXING BINS SECTIONS & DETAILS
C14	SB – MIXING BINS SECTIONS & DETAILS
C15	SB – SLAB SECTIONS & DETAILS
C16	SB – SLAB SECTIONS & DETAILS
C17	SB – EQUIPMENT FOUNDATION PLANS
C18	SB – WATER TANK FOUNDATION PLAN

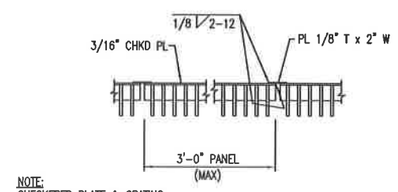

NOTE:
CHECKERED PLATE & GRATING ARE REMOVABLE

SECTION K (C16)
SCALE: NTS

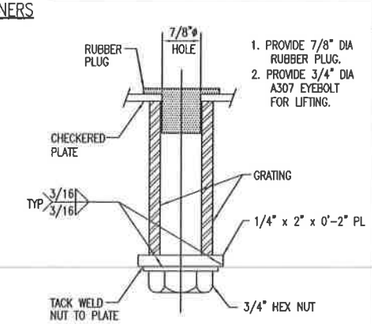

DETAIL 2 (C16)
SCALE: NTS

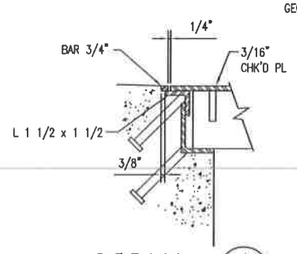

DETAIL 4 (C15)
SCALE: NTS

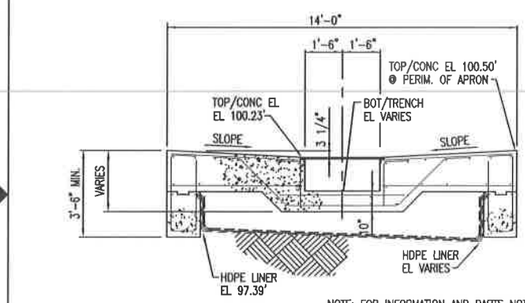

NOTE: FOR INFORMATION AND PARTS NOT SHOWN, SEE SECTION D (C15)

SECTION E (C07, C08, C13)
SCALE: 3/8" = 1'-0"

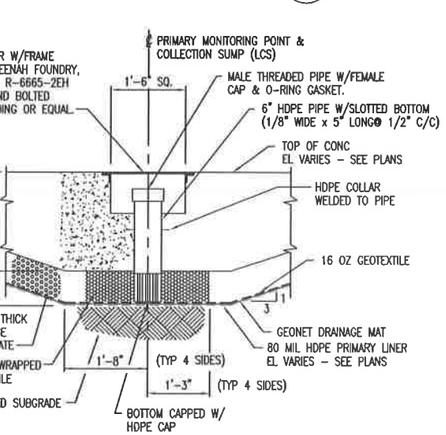

PRIMARY CONTAINMENT MONITORING SUMP @ SLAB
SCALE: 3/4" = 1'-0"

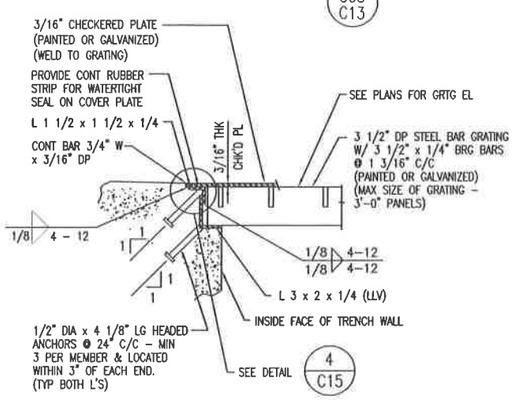

DETAIL 1 (C16)
SCALE: 2" = 1'-0"

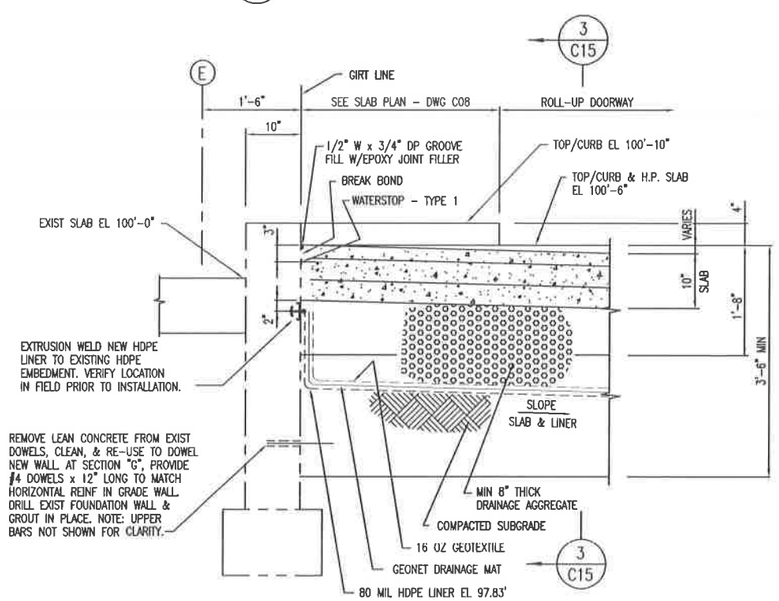

SECTION F (C07, C08)
SCALE: 1" = 1'-0" (AS SHOWN)

SECTION G (C07, C08)
SCALE: 1" = 1'-0" (OPP HAND & SIMILAR)

GRAPHIC SCALES

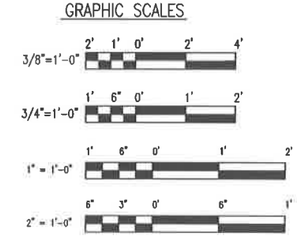

REV.	BY / DATE	CHK'D / DATE	DESCRIPTION	PROJ. ENGR. / DATE	SURV. ENGR. / DATE
E	RJM / 4/22/03	– / –	2003 PERMIT RENEWAL	– / –	AH / 4/22/03
D	DBB / 7/23/98	– / –	ISSUED FOR B PERMIT RENEWAL APPLICATION	– / –	– / –
C	EMH / 8/28/98	PJS / 8/28/98	AS BUILT FOR CQA PACKAGE	DL / 8/28/98	PJS / 8/28/98
B	JZ / 5/1/98	PJS / 5/8/98	REVISED DRAWING FOR 1998 SUMISSION TO IDEQ	DL / 5/8/98	PJS / 5/8/98
A	TLZ / 1/26/97	MFP / 1/28/97	ESII PERMIT ISSUE	DL / 1/28/97	DDC / 1/28/97

USEcology Idaho
an American Ecology company

SITE B
GRAND VIEW, IDAHO
US EPA ID NO. IDD 073 114 654

TITLE: CIVIL
CONTAINMENT BUILDING (STABILIZATION AREA)
SLAB SECTIONS & DETAILS

DRAWN BY: TLZ	DATE	SCALE: 3/8"=1'-0"	FILE CODE PRMIC15E	REV. NO.
CHECKED	DATE	ENGINEER DATE	DWG. NO. 793P-C15	E
PROJ. MGR.	DATE	APPROVED DATE	PROJ. NO. PRMI	

DWG. NO. 793P-C16
PROJ. NO. PRMI

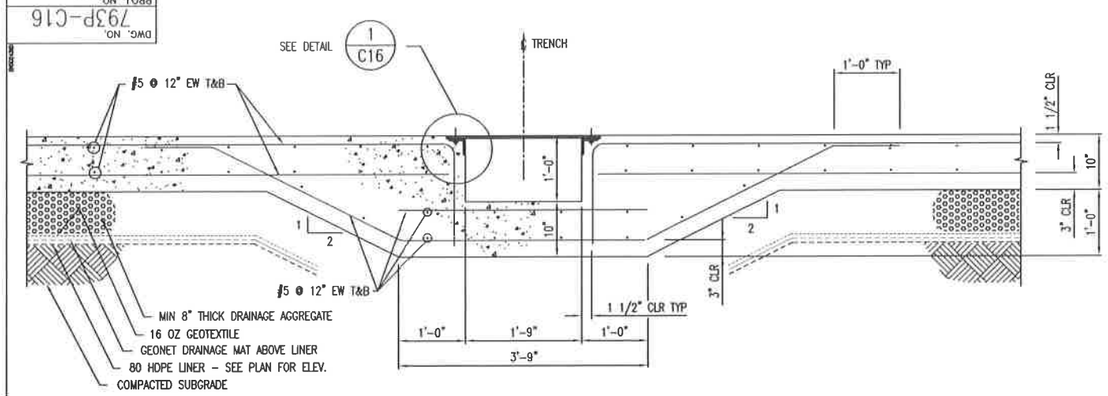

SECTION H C08

1' 6" 0' 1' 2'

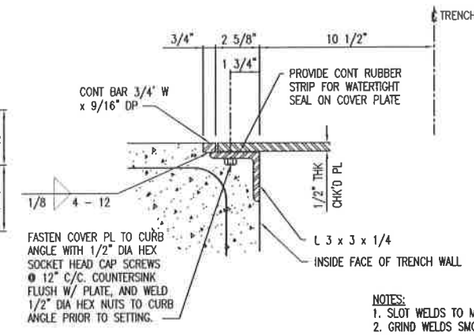

DETAIL 1 C16

3" 0" 3" 6" 9"

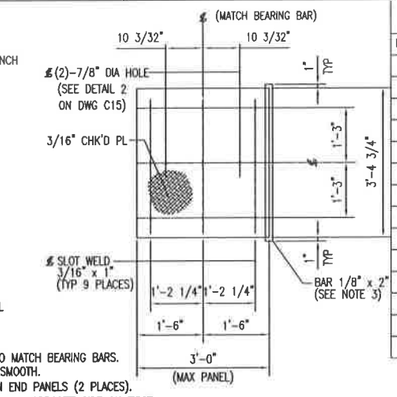

NOTES:
1. SLOT WELDS TO MATCH BEARING BARS.
2. GRIND WELDS SMOOTH.
3. a) NO BAR ON END PANELS (2 PLACES).
   b) ADDITIONAL BAR OPPOSITE SIDE ON FIRST INTERIOR PANEL (ONE PLACE).

CHECKERED PLATE PLAN
WELD PATTERN & LIFTING SCHEME
SCALE: NTS

REFERENCE DRAWINGS

DWG NO.	TITLE
C01	GENERAL NOTES & LEGEND
C05	SB – FOUNDATION PLAN
C06	SB – FOUNDATION PLAN @ MIXING BINS
C07	SB – LINER PLAN
C08	SB – SLAB PLAN
C09	SB – FOUNDATIONS SECTIONS & DETAILS
C10	SB – MIXING BIN LINER PLATE – SECTIONS & DETAILS
C11	SB – MIXING BIN LINER PLATE – SECTIONS & DETAILS
C12	SB – MIXING BIN – SECTIONS & DETAILS
C13	SB – MIXING BINS SECTIONS & DETAILS
C14	SB – MIXING BINS SECTIONS & DETAILS
C15	SB – SLAB SECTIONS & DETAILS
C17	SB – EQUIPMENT FOUNDATION PLANS
C18	SB – WATER TANK FOUNDATION PLAN

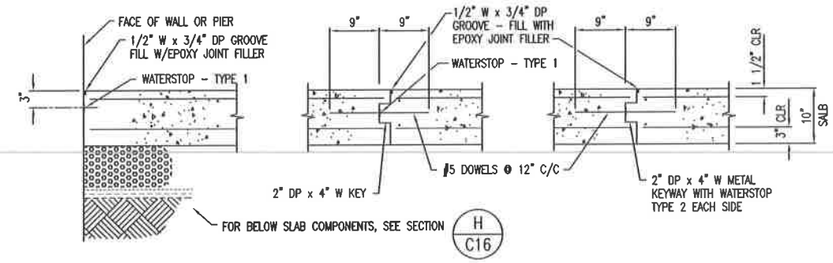

@ WALL AND PIER — @ CONSTRUCTION JOINT (CJ) — @ CONTROL JOINT (CLJ)

TYPICAL SLAB ON GRADE DETAILS

1' 6" 0' 1' 2'

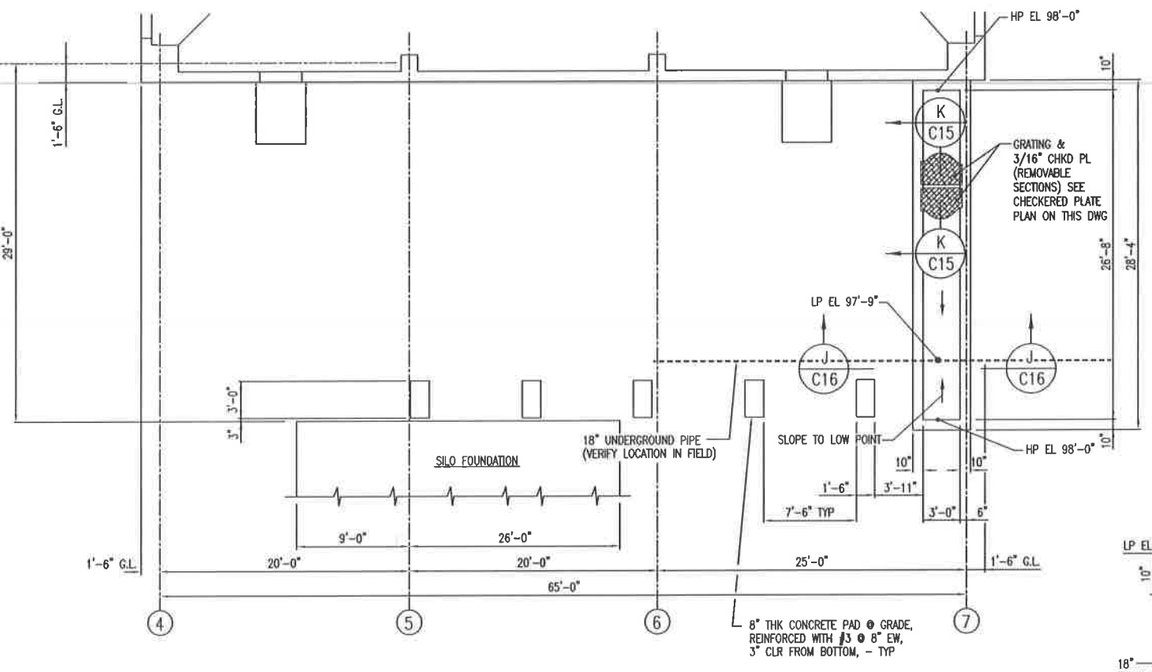

PARTIAL PLAN – EXTERIOR UTILITY TRENCH & PIPE SUPPORT PADS

4' 2' 0' 4' 8'

NOTE:
1. PIPE PENETRATIONS IN END PANELS OF CHECKERED PLATE AND GRATING SHALL BE FIELD CUT.
2. PHANTOM DASHED LINE INDICATES PROPOSED FUTURE ADDITION.

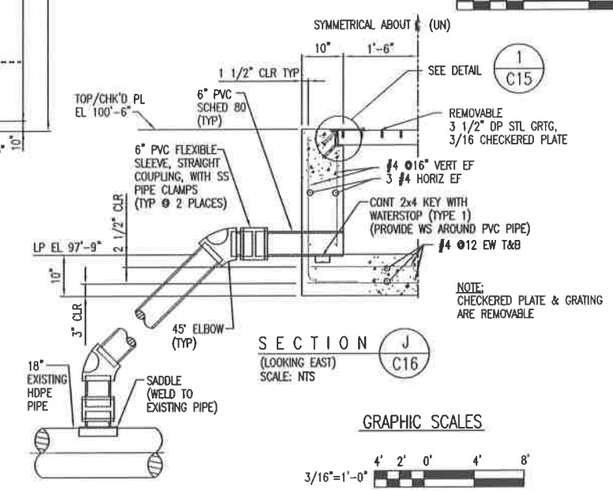

NOTE:
CHECKERED PLATE & GRATING ARE REMOVABLE

SECTION J C16
(LOOKING EAST)
SCALE: NTS

GRAPHIC SCALES

3/16"=1'-0" 4' 2' 0' 4' 8'
3/4"=1'-0" 1' 6" 0' 1' 2'
1"=1'-0" 1' 6" 0' 1' 2'
3"=1'-0" 3" 0" 3" 6" 9"

REV.	BY / DATE	CHK'D / DATE	DESCRIPTION	PROJ ENGR / DATE	SUPV ENGR / DATE
E	RJM / 11/5/03	– / –	2003 PERMIT RENEWAL	– / –	JH / 5/5/03
D	DBB / 7/26/98	– / –	ISSUED FOR B PERMIT RENEWAL APPLICATION	– / –	– / –
C	BMI / 4/29/98	RJS / 4/29/98	AS BUILT FOR CQA PACKAGE	DL / 4/29/98	RJS / 4/29/98
B	JZ / 5/1/98	RJS / 5/8/98	REVISED DRAWING FOR MAY 1998 SUBMISSION TO IDEQ	DL / 5/8/98	RJS / 5/8/98
A	JZ / 3/26/97	MFP / 3/26/97	ESII PERMIT ISSUE	DL / 3/26/97	BBC / 3/26/97

USEcology Idaho
an American Ecology company

SITE B
GRAND VIEW, IDAHO
US EPA ID NO. IDD 073 114 654

TITLE: CIVIL
CONTAINMENT BUILDING (STABILIZATION AREA)
MISCELLANEOUS SECTIONS & DETAILS

DRAWN BY: JZ	DATE	SCALE:	FILE CODE PRMICIBE	REV. NO.
CHECKED	DATE	ENGINEER DATE	DWG. NO. 793P-C16	E
PROJ. MGR.	DATE	APPROVED DATE	PROJ. NO. PRMI	

DWG. NO. 793P-C17
PROJ. NO. PRMI

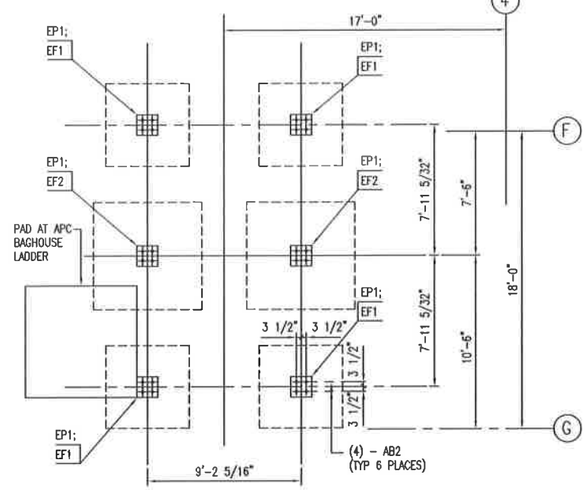

BAGHOUSE FOUNDATION PLAN
SCALE: 1/4"=1'-0"

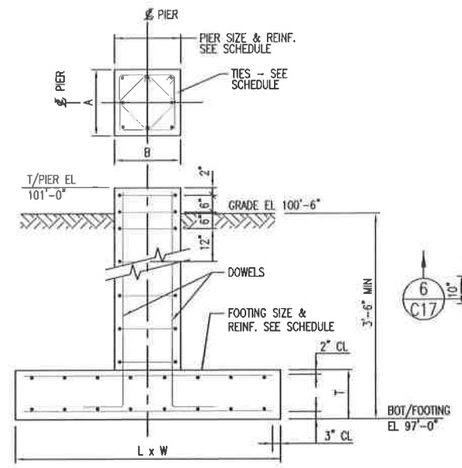

TYPICAL COLUMN FOOTING & PIER DETAIL
SCALE : NONE

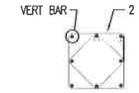

8–VERT BAR

PIER REINFORCING DETAILS

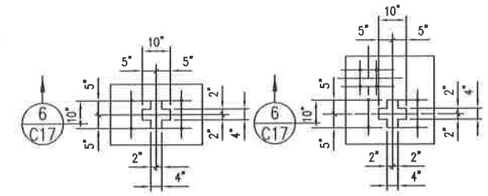

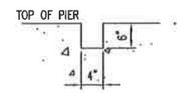

SECTION 6 C17
SCALE: 1"=1'-0"

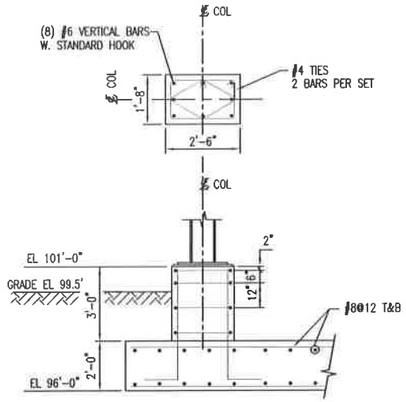

SECTION 2 C17
SCALE: 3/8"=1'-0"

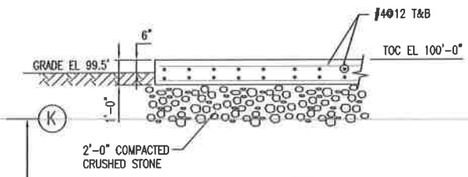

SECTION 3 C17
SCALE: 3/8"=1'-0"

REFERENCE DRAWINGS

DWG NO	TITLE
C01	GENERAL NOTES & LEGEND
C05	SB – FOUNDATION PLAN
C06	SB – FOUNDATION PLAN @ MIXING BINS
C07	SB – LINER PLAN
C08	SB – SLAB PLAN
C09	SB – FOUNDATIONS SECTIONS & DETAILS
C10	SB – MIXING BIN LINER PLATE – SECTIONS & DETAILS
C11	SB – MIXING BIN LINER PLATE – SECTIONS & DETAILS
C12	SB – MIXING BIN – SECTIONS & DETAILS
C13	SB – MIXING BINS SECTIONS & DETAILS
C14	SB – MIXING BINS SECTIONS & DETAILS
C15	SB – SLAB SECTIONS & DETAILS
C16	SB – SLAB SECTIONS & DETAILS
C18	SB – WATER TANK FOUNDATION PLAN

PIER SCHEDULE
(SEE DETAIL ON DWG NO. 793C-C17)

MARK	TYPE	DIMENSIONS A	DIMENSIONS B	REINFORCING VERT	REINFORCING TIES	REMARKS
EP1	–	1'-3"	1'-3"	8#6	#4@12	

COLUMN FOOTING SCHEDULE
(SEE DETAIL ON DWG NO. 793C-C17)

MARK	SIZE L	SIZE W	SIZE T	REINFORCING BOTTOM	REINFORCING TOP	REMARKS
EF1	5'-0"	5'-0"	1'-3"	#6@12EW	#6@12EW	
EF2	6'-6"	6'-6"	1'-3"	#6@12EW	#6@12EW	

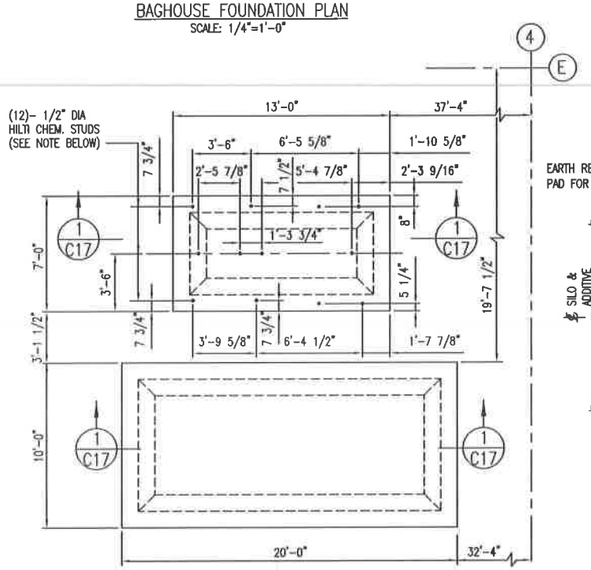

HEPA FILTER & FAN No. 4 FOUNDATION PLAN
SCALE: 1/4"=1'-0"

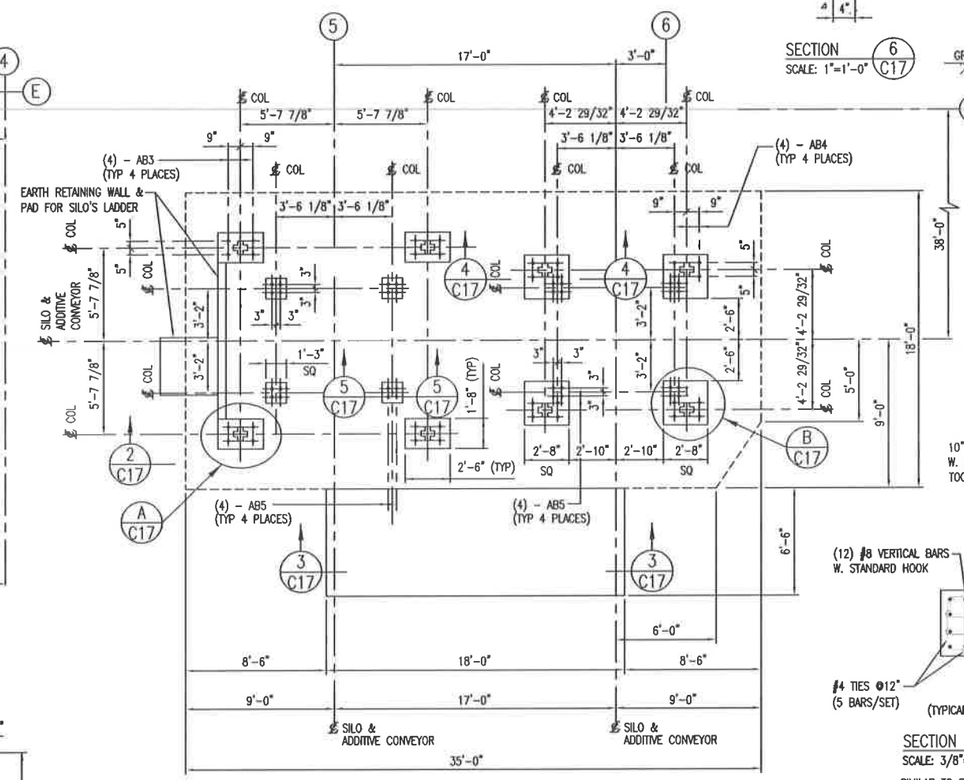

SILO AND PNEUMATIC CONVEYOR SYSTEM BLOWER FOUNDATION PLAN
SCALE: 1/4"=1'-0"

NOTE: 1. TOP OF PIER EL 101'-0".

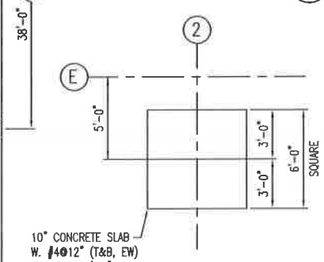

STACK FOUNDATION PLAN
SCALE: 1/4"=1'-0"

ANCHOR BOLT SCHEDULE

MARK	TYPE	D	L	E	T	P
AB2	1	3/4"	21 1/4"	15"	2 1/4"	4 1/4"
AB3	1	1 1/2"	26 1/2"	18"	4 1/2"	6 1/2"
AB4	1	1 1/4"	23"	15"	4"	6"
AB5	1	3/4"	21 1/4"	15"	2 1/4"	4 1/4"

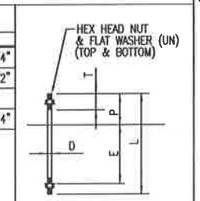

NOTE: PROVIDE A 5/16" THK PLATE WASHER W/STD HOLE

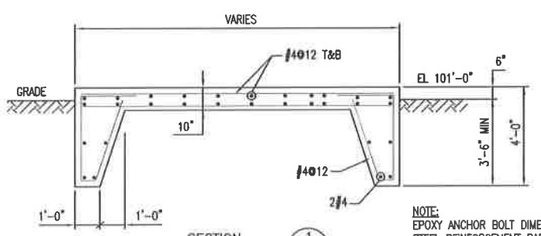

SECTION 1 C17
SCALE: 3/8"=1'-0"

NOTE:
EPOXY ANCHOR BOLT DIMENSIONS SHOWN ARE FOR REFERENCE PURPOSES ONLY. STEEL REINFORCEMENT BARS SHALL BE PLACED SO AS TO ELIMINATE INTERFERENCE WITH FIELD INSTALLED ANCHORS. ANCHORS SHALL BE DRILLED AND EPOXIED AFTER FIELD VERIFICATION OF SPACING WITH ACTUAL FAN EQUIPMENT SKID ASSEMBLY. THE GROUP OF ANCHOR BOLTS ARE TO BE LOCATED IN RELATION TO THE ANCHOR LOCATED AND DIMENSIONED ON THE SOUTHWEST CORNER OF THE FAN FOUNDATION.

NOTE: DRAWING C-16, REV A OF THE USEI PERMIT ISSUE WAS RENAMED DRAWING NUMBER C-17, REV A OF THE MAY '98 IDEQ SUBMISSION

NOTE: VERIFY ALL DIMENSIONS WITH THE EQUIPMENT MANUFACTURER PRIOR TO FABRICATION AND CONSTRUCTION.

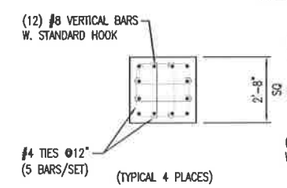

SECTION 4 C17
SCALE: 3/8"=1'-0"
SIMILAR TO SECTION 2/C17

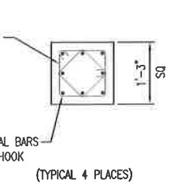

SECTION 5 C17
SCALE: 3/4"=1'-0"
SIMILAR TO SECTION 2/C17

GRAPHIC SCALES:

REV.	DATE	BY	CHK'D	DESCRIPTION	PROJ ENGR	SUPV ENGR
D	4/8/03	RJM		2003 PERMIT RENEWAL		JN 4/8/03
C	7/28/98	DBB	–	ISSUED FOR B PERMIT RENEWAL APPLICATION	–	–
B	4/29/98	EBH	RJS	AS BUILT FOR CQA PACKAGE	EL 4/29/98	RJS 4/29/98
A	5/1/98	JZ	RJS	REVISED DRAWING FOR MAY 1998 TO IDEQ (FORMERLY DWG NO. 793P-C16), REV A	EL 5/1/98	RJS 5/1/98

USEcology Idaho
an American Ecology company

SITE B
GRAND VIEW, IDAHO
US EPA ID NO. IDD 073 114 654

TITLE:
CIVIL
CONTAINMENT BUILDING (STABILIZATION AREA)
EQUIPMENT FOUNDATIONS PLANS

DRAWN BY: JZ	DATE	SCALE:	FILE CODE PRMIC17D
CHECKED	DATE	ENGINEER	DATE
PROJ. MGR.	DATE	APPROVED	DATE

DWG. NO. 793P-C17
PROJ. NO. PRMI
REV. NO.

DWG. NO. 793P-G01
PROJ. NO. PRMI

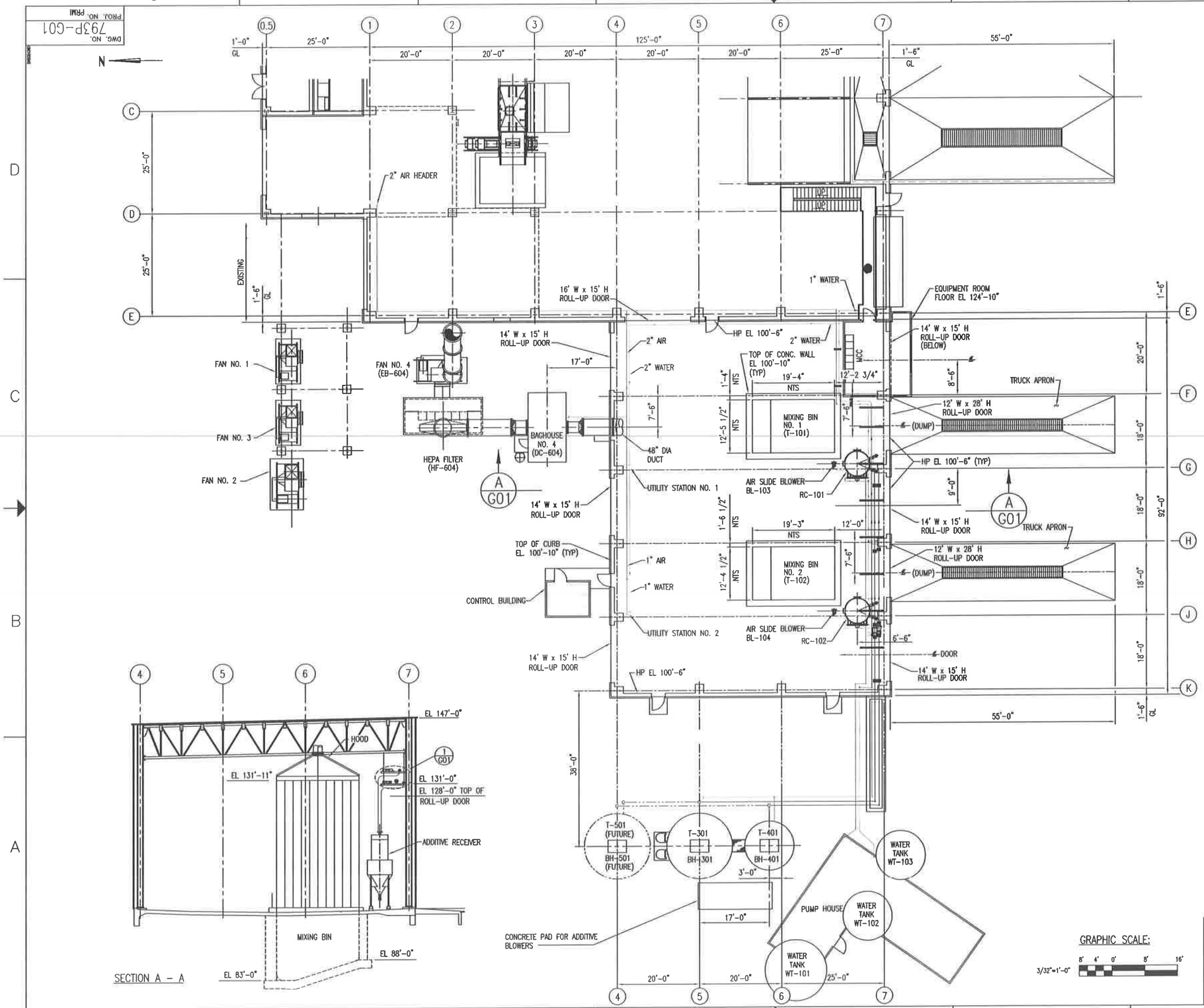

LEGEND

ITEM NUMBER	DESCRIPTION
BH-301, BH-401, (BH-501 FUTURE)	SILO DUST COLLECTOR
BL-101, BL-102	ADDITIVE BLOWER
CO-101, CO-102	ADDITIVE CONVEYOR
DC-604	BAGHOUSE No. 4
EB-604	FAN NO. 4
HF-604	HEPA FILTER
CO-101, CO-102, (CO-103 FUTURE)	ADDITIVE CONVEYOR
RC-101, RC-102	ADDITIVE RECEIVER
RF-101, RF-102	ADDITIVE ROTARY FEEDER
T-301, T-401, (T-501 FUTURE)	ADDITIVE STORAGE SILO
AS-101, AS-102	ADDITIVE AIR SLIDE
BL-103, BL-104	AIR SLIDE BLOWER
WP-101A, WP-101B	PROCESS WATER PUMP

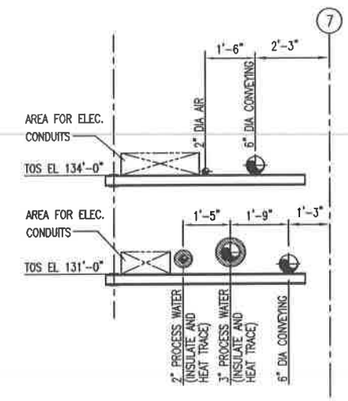

DETAIL NO. 1
SCALE: 1/2"=1'-0"

SECTION A – A

GRAPHIC SCALE:
3/32"=1'-0"

REV.	BY / DATE	CHK'D / DATE	DESCRIPTION	PROJ. ENGR. / DATE	SUPV. ENGR. / DATE
E	RJB / 5/5/10	- / -	2003 PERMIT RENEWAL	- / -	JH / 5/5/10
D	EMH / 7/24/98	- / -	ISSUED FOR B PERMIT RENEWAL APPLICATION	- / -	- / -
C	EMH / 4/29/98	RVS / 4/29/98	AS BUILT FOR CQA PACKAGE	DL / 4/29/98	RVS / 4/29/98
B	JZ / 3/1/98	RVS / 3/9/98	REVISED DRAWING FOR MAY 1998 SUBMISSION TO IDEQ	DL / 3/9/98	RVS / 3/9/98
A	EMH / 3/26/97	MFP / 3/26/97	ESII PERMIT ISSUE	DL / 3/26/97	DDC / 3/26/97

USEcology Idaho
an American Ecology company

SITE B
GRAND VIEW, IDAHO
US EPA ID NO. IDD 073 114 654

TITLE: AIR AND PROCESS WATER SYSTEM CONTAINMENT BUILDING (STABILIZATION AREA) PLAN VIEW & SECTION

DRAWN BY: EMH	DATE	SCALE:	FILE CODE PRMG01E	REV. NO.
CHECKED	DATE	ENGINEER	DATE	DWG. NO. 793P-G01	E
PROJ. MGR.	DATE	APPROVED	DATE	PROJ. NO. PRMI	

DWG. NO. 793P-H01
PROJ. NO. PRMI

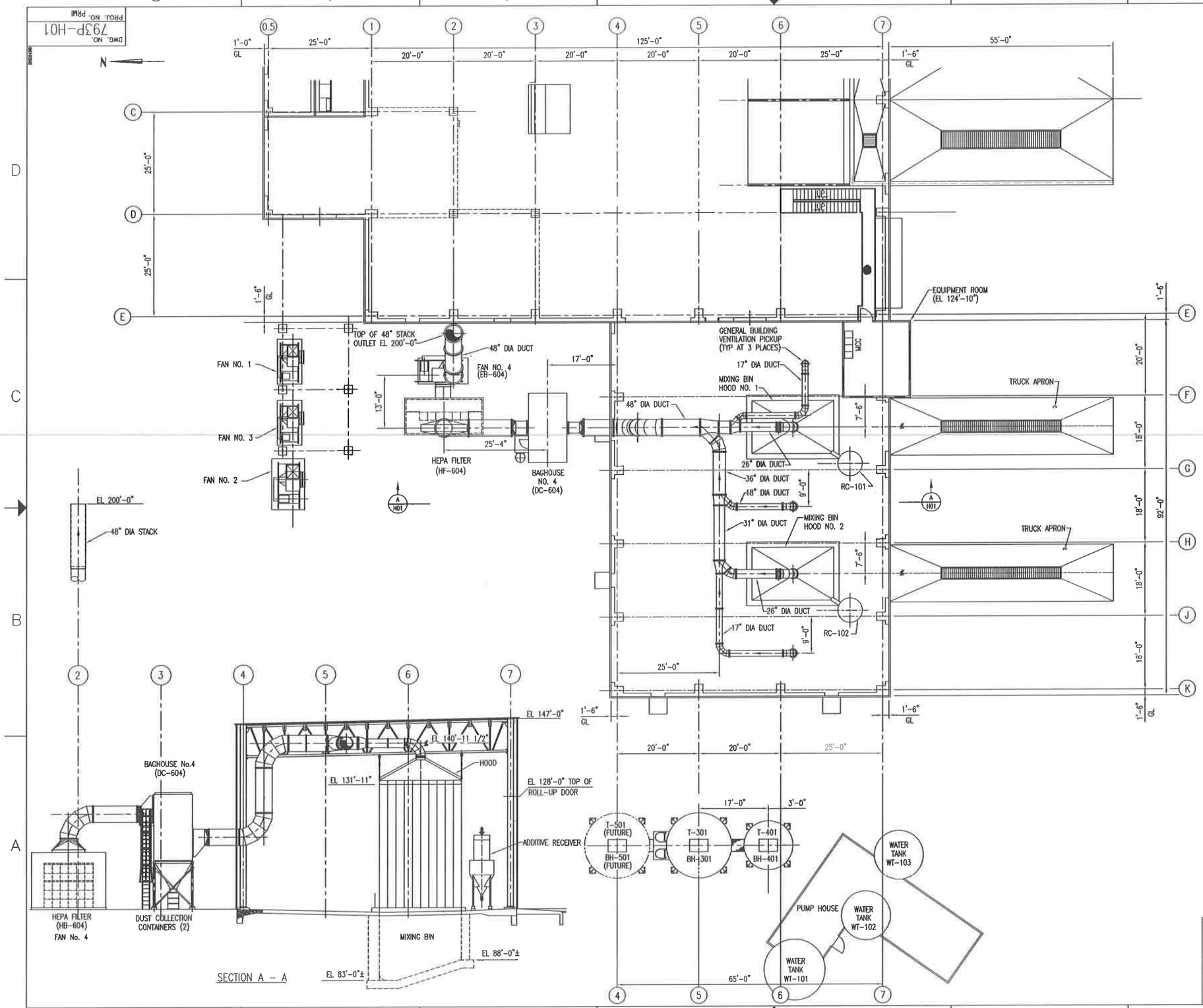

LEGEND

ITEM NUMBER	DESCRIPTION
BH-301, BH-401, (BH-501 FUTURE)	SILO DUST COLLECTOR
BL-101, BL-102	ADDITIVE BLOWER
CO-101, CO-102, (CO-103 FUTURE)	ADDITIVE CONVEYOR
DC-604	BAGHOUSE No. 4
EB-604	APC EXHAUST BLOWER
HF-604	HEPA FILTER
RC-101, RC-102	ADDITIVE RECEIVER
RF-101, RF-102	ADDITIVE ROTARY FEEDER
T-301, T-401, (T-501 FUTURE)	ADDITIVE STORAGE SILO

GRAPHIC SCALE:

8' 4' 0' 8' 16'

REV.	BY / DATE	CHK'D / DATE	DESCRIPTION	PROJ. ENGR / DATE	SUPV. ENGR / DATE
E	RJM / 4/22/03	- / -	2003 PERMIT RENEWAL	- / -	JH / 4/22/03
D	EMH / 7/26/98	- / -	ISSUED FOR B PERMIT RENEWAL APPLICATION	- / -	- / -
C	EMH / 4/29/98	RJS / 4/29/98	AS BUILT FOR CQA PACKAGE	CL / 4/29/98	RJS / 4/29/98
B	EMH / 5/1/98	RJS / 5/6/98	REVISED DRAWING FOR MAY 1998 SUBMISSION TO IDEQ	CL / 5/8/98	RJS / 5/8/98
A	EMH / 1/26/97	MFP / 1/26/97	ESII PERMIT ISSUE	CL / 1/26/97	DDC / 1/26/97

USEcology Idaho
an American Ecology company

SITE B
GRAND VIEW, IDAHO
US EPA ID NO. IDD 073 114 654

TITLE: AIR POLLUTION CONTROL SYSTEM CONTAINMENT BUILDING (STABILIZATION AREA) PLAN VIEW AND SECTION

DRAWN BY: EMH	DATE	SCALE:		FILE CODE PRMH01E	REV. NO.
CHECKED	DATE	ENGINEER	DATE	DWG. NO. 793P-H01	E
PROJ. MGR.	DATE	APPROVED	DATE	PROJ. NO. PRMI	

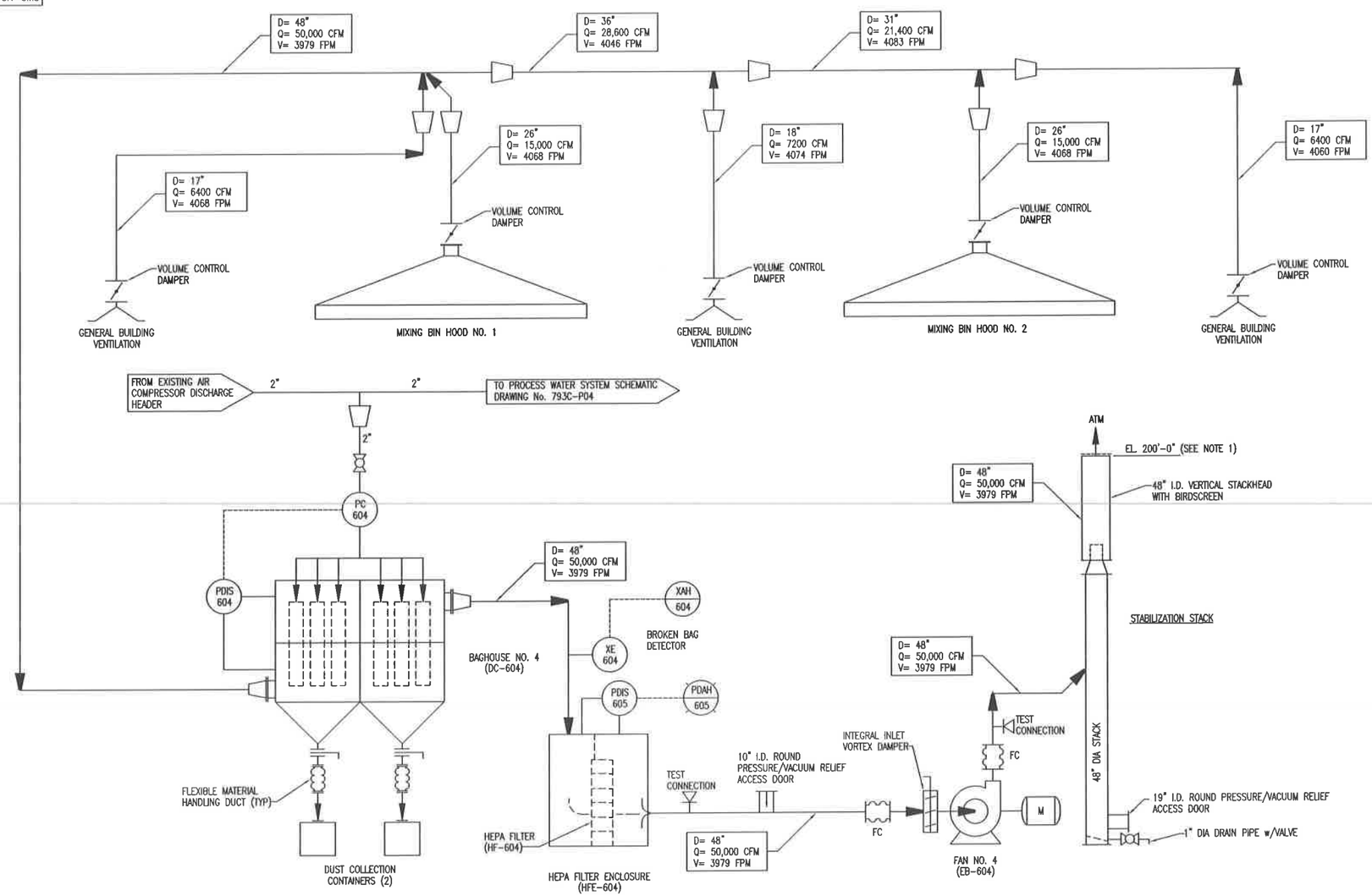

NOTES:

1. TOP OF STABILIZATION STACK ELEVATION SHALL BE 100'-0" ABOVE GRADE REFERENCE EL. 100'-0"(I.E., EL. 200'-0")
2. LEGEND FOR DUCT BRANCHES AND HEADERS SHOWN ABOVE IS AS FOLLOWS:

D= DUCT DIAMETER (INCHES)
Q= DUCT AIR FLOW (CFM)
V= DUCT AIR VELOCITY (FPM)

REV.	BY / DATE	CHK'D / DATE	DESCRIPTION	PROJ ENGR / DATE	SUPV ENGR / DATE
E	RM / 5/5/03	- / -	2003 PERMIT RENEWAL	- / -	JH / 5/5/03
D	EMH / 7/29/98	- / -	ISSUED FOR B PERMIT RENEWAL APPLICATION	- / -	- / -
C	EMH / 4/29/98	PJS / 4/29/98	AS BUILT FOR CQA PACKAGE	DL / 4/29/98	PJS / 4/29/98
B	EMH / 5/1/98	PJS / 5/5/98	REVISED DRAWING FOR MAY 1998 SUBMISSION TO IDEQ	DL / 5/5/98	PJS / 5/5/98
A	EMH / 1/28/97	MFP / 1/28/97	ESII PERMIT ISSUE	DL / 1/28/97	DRC / 1/28/97

USEcology Idaho
an American Ecology company

SITE B
GRAND VIEW, IDAHO
US EPA ID NO. IDD 073 114 654

TITLE: TYPICAL SCHEMATIC FLOW DIAGRAM
AIR POLLUTION CONTROL SYSTEM
CONTAINMENT BUILDING (STABILIZATION AREA)

DRAWN BY: EMH / DATE	SCALE:	FILE CODE PRMP03E	REV. NO.
CHECKED / DATE	ENGINEER / DATE	DWG. NO. 793P-P03	E
PROJ. MGR. / DATE	APPROVED / DATE	PROJ. NO. PRMI	

DWG. NO. 793P-P03
PROJ. NO. PRMI

DWG. NO. 793P-P04
PROJ. NO. PRMI

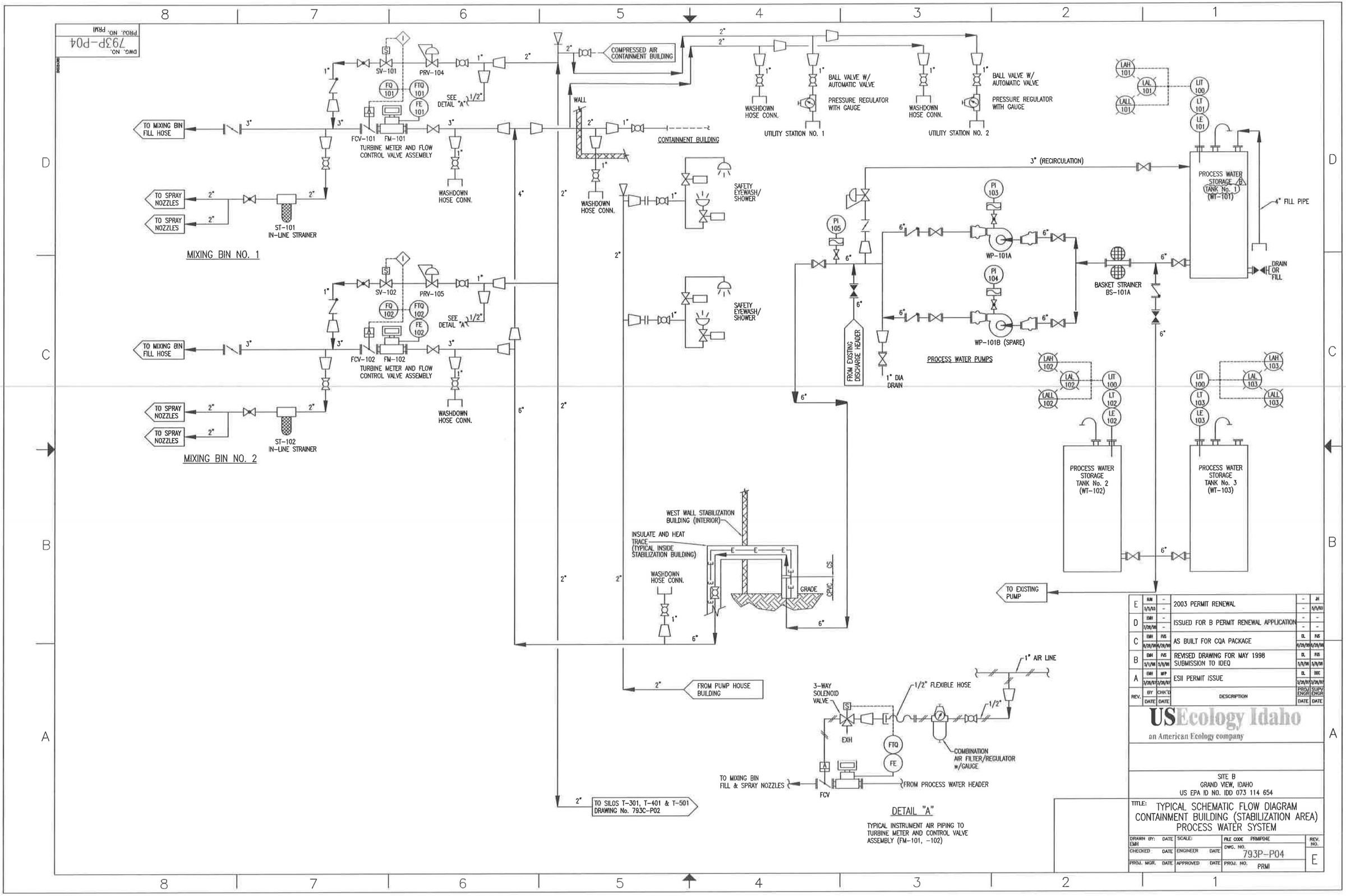

REV.	BY DATE	CHK'D DATE	DESCRIPTION	ENGR DATE	SUPV ENGR DATE
E	RJM 1/3/03	- -	2003 PERMIT RENEWAL	- -	JH 1/3/03
D	EMH 7/28/98	- -	ISSUED FOR B PERMIT RENEWAL APPLICATION	- -	- -
C	EMH 8/28/98	PJS 8/28/98	AS BUILT FOR CQA PACKAGE	DL 8/28/98	PJS 8/28/98
B	EMH 5/1/98	PJS 5/8/98	REVISED DRAWING FOR MAY 1998 SUBMISSION TO IDEQ	DL 5/8/98	PJS 5/8/98
A	EMH 3/26/97	MFP 3/26/97	ESII PERMIT ISSUE	DL 3/26/97	DEC 3/26/97

USEcology Idaho
an American Ecology company

SITE B
GRAND VIEW, IDAHO
US EPA ID NO. IDD 073 114 654

TITLE: TYPICAL SCHEMATIC FLOW DIAGRAM CONTAINMENT BUILDING (STABILIZATION AREA) PROCESS WATER SYSTEM

DRAWN BY: EMH	DATE	SCALE:	FILE CODE PRMP04E	REV. NO.
CHECKED	DATE	ENGINEER DATE	DWG. NO. 793P-P04	E
PROJ. MGR.	DATE	APPROVED DATE	PROJ. NO. PRMI	

DWG. NO. 793P-R01
PROJ. NO. PRMI

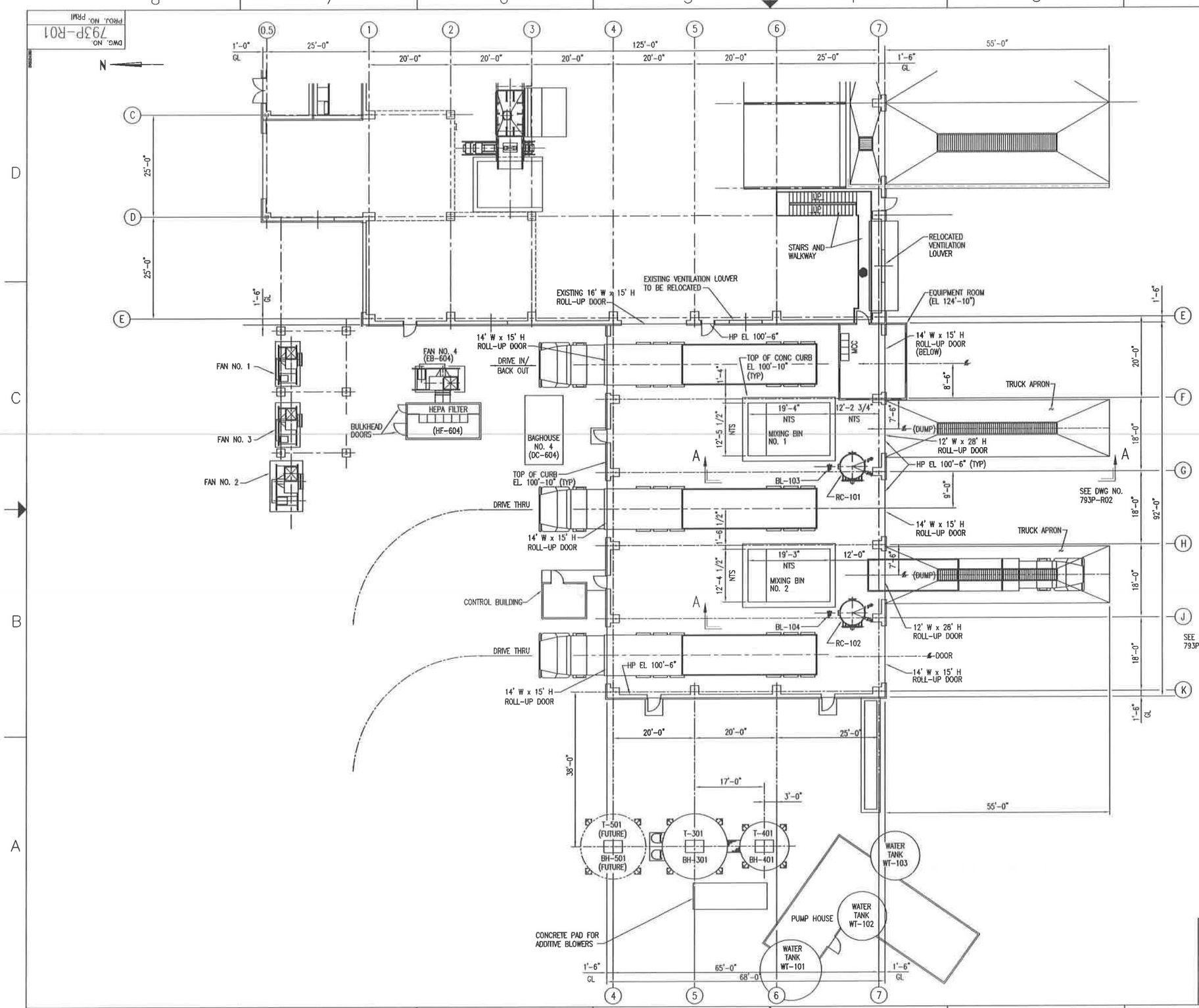

LEGEND

ITEM NUMBER	DESCRIPTION
BH-301, BH-401, (BH-501 FUTURE)	SILO DUST COLLECTOR
BL-101, BL-102	ADDITIVE BLOWER
BL-103, BL-104	AIR SLIDE BLOWER
CO-101, CO-102, (CO-103 FUTURE)	ADDITIVE CONVEYOR
DC-604	BAGHOUSE No. 4
EB-604	APC EXHAUST BLOWER
HF-604	HEPA FILTER
RC-101, RC-102	ADDITIVE RECEIVER
RF-101, RF-102	ADDITIVE ROTARY FEEDER
T-301, T-401, (T-501 FUTURE)	ADDITIVE STORAGE SILO

GRAPHIC SCALE:

3/32"=1'-0" 8' 4' 0' 8' 16'

REV.	BY / DATE	CHK'D / DATE	DESCRIPTION	PROJ. ENGR. / DATE	SUPV. ENGR. / DATE
E	RJN 5/5/03	- -	2003 PERMIT RENEWAL	- -	JH 5/5/03
D	EMH 7/26/96	- -	ISSUED FOR B PERMIT RENEWAL APPLICATION	- -	- -
C	EMH 8/29/96	RJS 8/29/96	AS BUILT FOR CQA PACKAGE	DL 8/29/96	RJS 8/29/96
B	JZ 5/1/96	RJS 5/8/96	REVISED DRAWINGS FOR MAY 1998 SUBMISSION TO IDEQ	DL 5/8/96	RJS 5/8/96
A	EMH 3/26/97	MFP 3/26/97	ESII PERMIT ISSUE	DL 3/26/97	DDC 3/26/97

USEcology Idaho
an American Ecology company

SITE B
GRAND VIEW, IDAHO
US EPA ID NO. IDD 073 114 654

TITLE: TYPICAL EQUIPMENT ARRANGEMENT CONTAINMENT BUILDING (STABILIZATION AREA) FLOOR PLAN

DRAWN BY: EMH DATE	SCALE:	FILE CODE PRMIR01E	REV. NO. E
CHECKED DATE	ENGINEER DATE	DWG. NO. 793P-R01	
PROJ. MGR. DATE	APPROVED DATE	PROJ. NO. PRMI	

DWG. NO. 793P-R02
PROJ. NO. PRMI

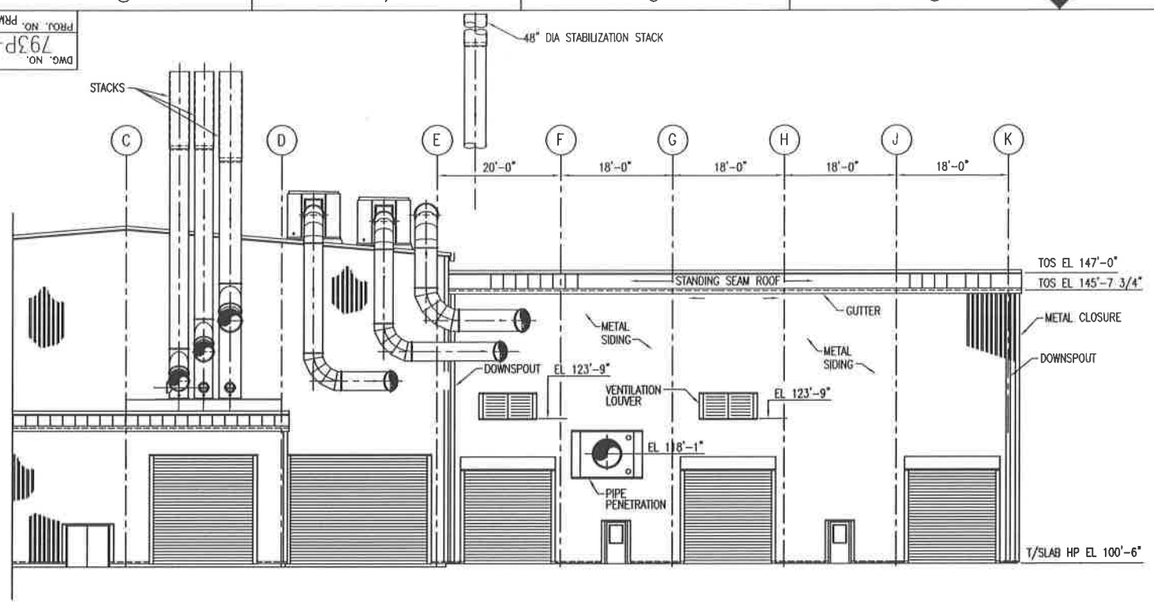

NORTH ELEVATION (LOOKING SOUTH)

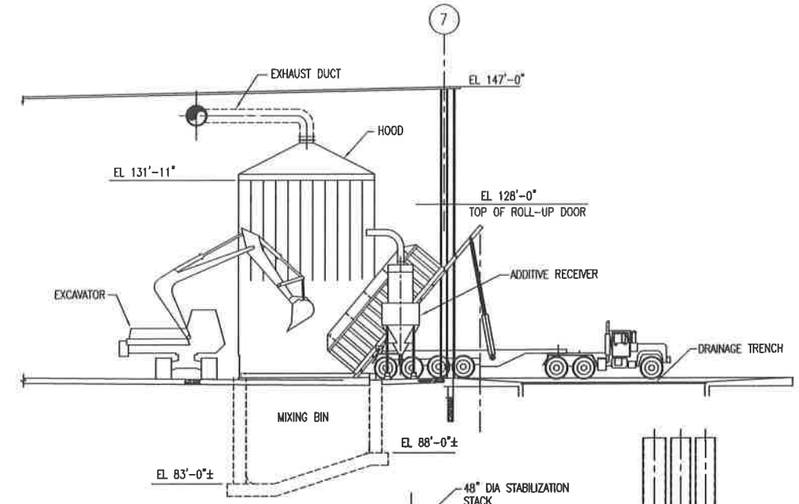

SECTION A-A
TYPICAL

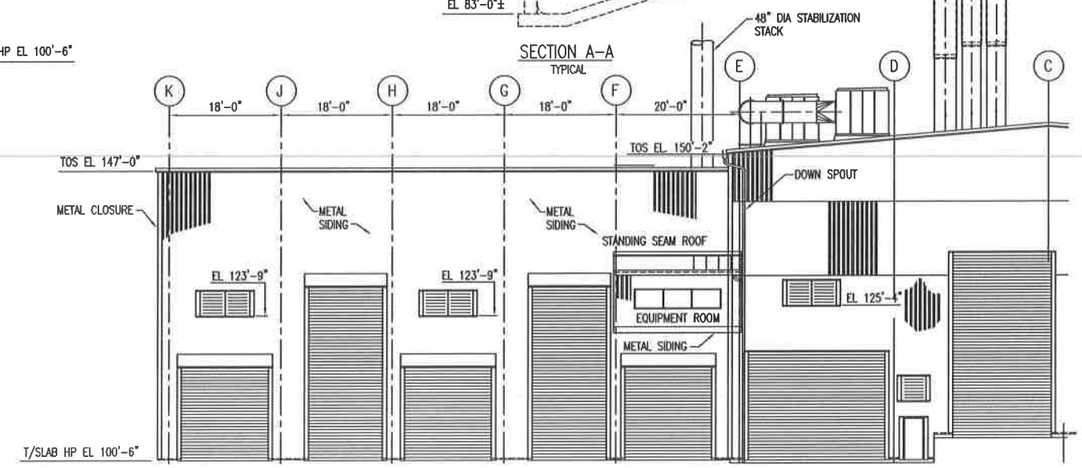

SOUTH ELEVATION (LOOKING NORTH)

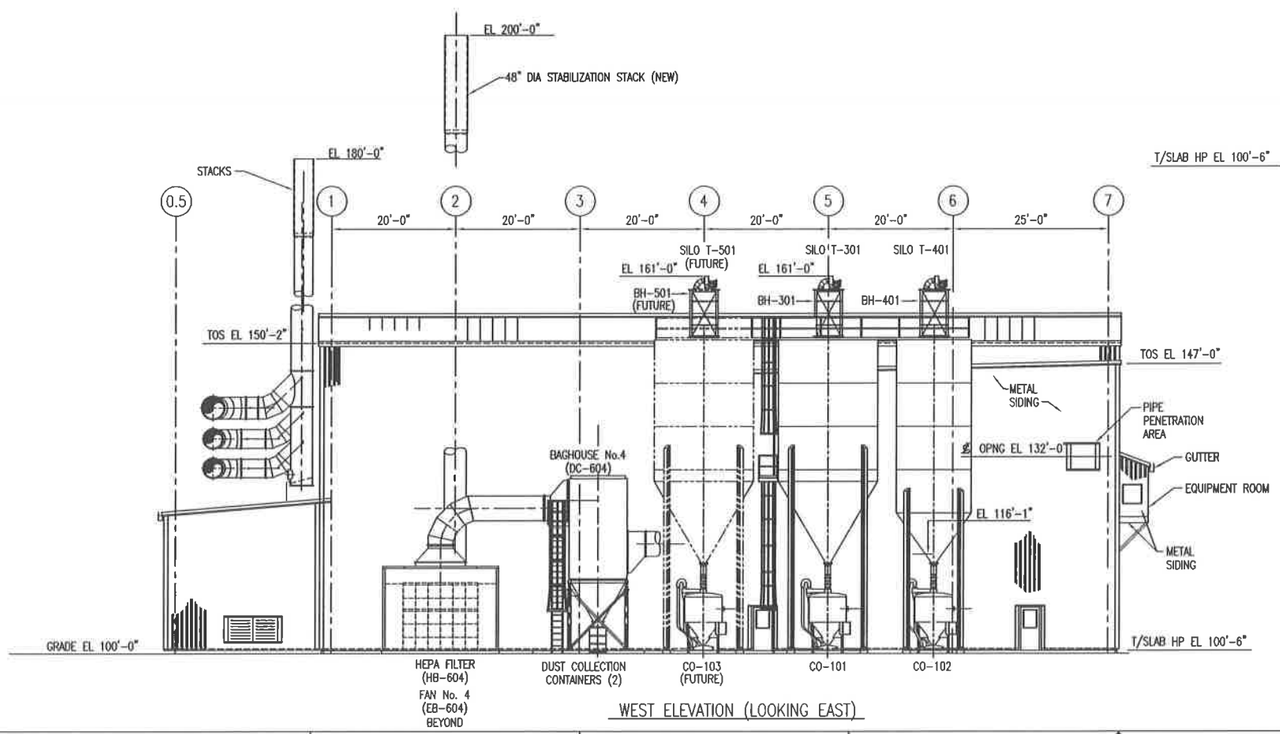

WEST ELEVATION (LOOKING EAST)

GRAPHIC SCALE:

3/32" = 1'-0" 8' 4' 0' 8' 16'

REV.	BY / DATE	CHK'D / DATE	DESCRIPTION	PROJ ENGR / DATE	SUPV ENGR / DATE
E	BJH / 3/5/03	- / -	2003 PERMIT RENEWAL	- / -	JN / 3/5/03
D	EMH / 7/28/98	- / -	ISSUED FOR B PERMIT RENEWAL APPLICATION	- / -	- / -
C	EMH / 9/29/98	PJS / 9/29/98	AS BUILT FOR CQA PACKAGE	DL / 9/29/98	PJS / 9/29/98
B	EMH / 5/1/98	PJS / 5/8/98	REVISED DRAWING FOR MAY 1998 SUBMISSION TO IDEQ	DL / 5/8/98	PJS / 5/8/98
A	EMH / 1/28/97	MFP / 1/28/97	ESII PERMIT ISSUE	DL / 1/28/97	DDC / 1/28/97

USEcology Idaho
an American Ecology company

SITE B
GRAND VIEW, IDAHO
US EPA ID NO. IDD 073 114 654

TITLE: TYPICAL EQUIPMENT ARRANGEMENT CONTAINMENT BUILDING (STABILIZATION AREA) ELEVATIONS

DRAWN BY: EMH	DATE	SCALE:	FILE CODE PRMIR02E	REV. NO.
CHECKED	DATE	ENGINEER	DATE	DWG. NO. 793P-R02	E
PROJ. MGR.	DATE	APPROVED	DATE	PROJ. NO. PRMI	

DWG. NO. PRMI-D04
PROJ. NO. PRMI

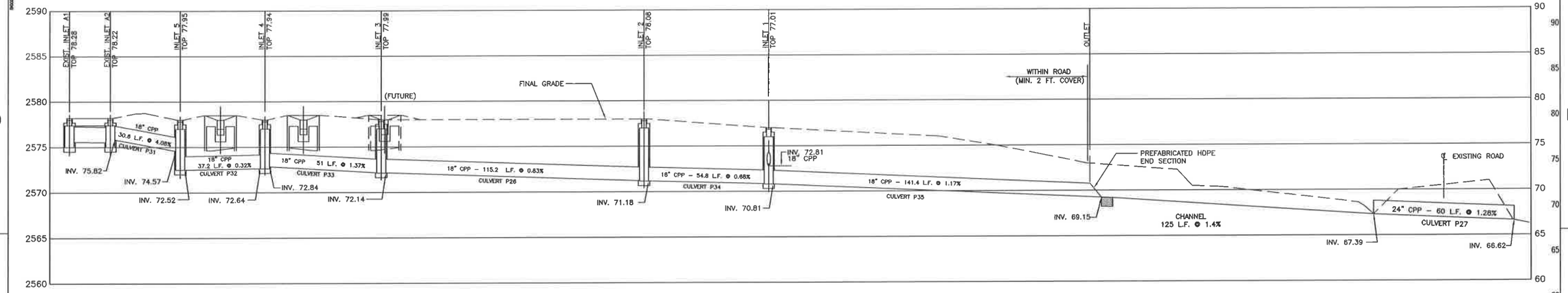

PROFILE INLETS A1, A2, 5, 4, 3, 2 AND 1

1" = 20' HORIZ.
1" = 5' VERT.

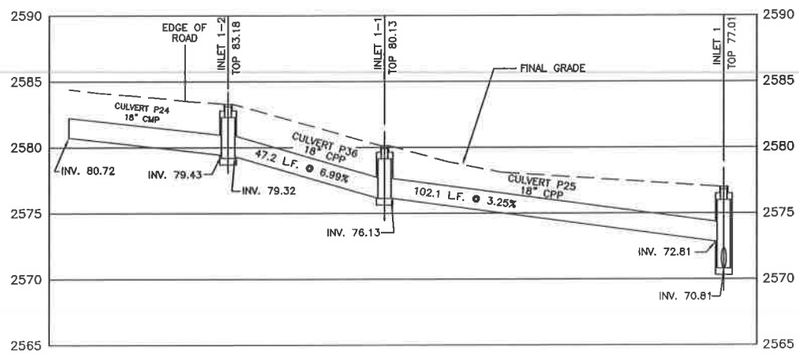

PROFILE INLETS 1–2, 1–1 AND 1

1" = 20' HORIZ.
1" = 5' VERT.

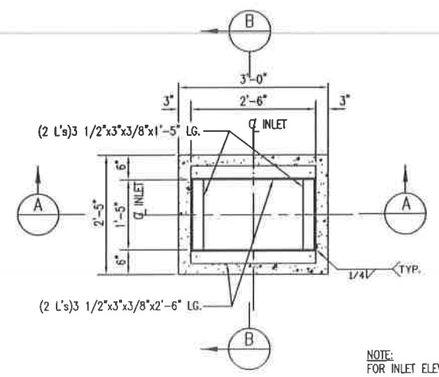

PLAN

NOTE:
FOR INLET ELEVATION
SEE PROFILE THIS DRAWING.
FOR PIPE LOCATION
SEE SITE PLAN DWG. XXXXX–XX.

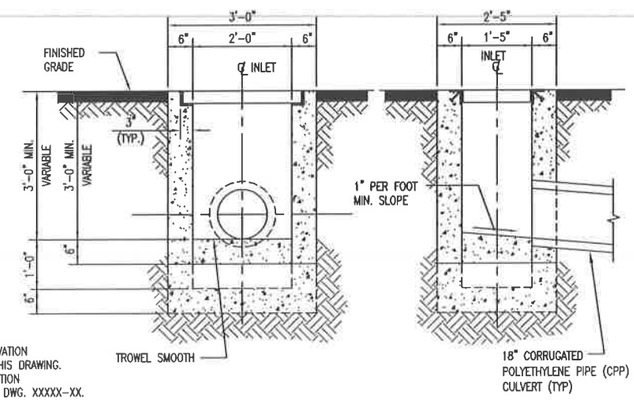

A DROP INLET/CATCH BASIN SECTION AT STABILIZATION BUILDING
SCALE: 3/4" = 1'-0"

B DROP INLET/CATCH BASIN SECTION AT STABILIZATION BUILDING
SCALE: 3/4" = 1'-0"

NOTES:

1. ALL INLET/CATCH BASIN CONSTRUCTION SHALL CONFORM TO IDAHO STANDARDS FOR PUBLIC WORKS CONSTRUCTION.
2. ONE INCH SIDE DRAFT SHALL BE ALLOWED FOR FORM REMOVAL IN THE CASE OF CAST IN PLACE CONCRETE DROP INLETS.
3. STEEL GRATES SHALL MEET THE REQUIREMENTS OF ASTM A–36.
4. ANGLES SHALL BE SET SO THAT EACH BEARING BAR OF PREFABRICATED GRATE SHALL HAVE FULL BEARING ON BOTH ENDS. THE FINISHED TOP OF CONCRETE SHALL BE FLUSH WITH THE GRATE SURFACE.
5. STRUCTURAL STEEL NEED NOT BE PAINTED.
6. THE GRADE LINE OF THE TOP INSIDE OF ANY CULVERT SHALL ENTER AT A POINT NO LOWER THAN THE GRADE LINE OF THE TOP INSIDE OF THE OUTLET PIPE.
7. THE DETAILS ON THIS DRAWING ARE TYPICAL OF THE EXISTING STORM WATER DROP INLETS AND CULVERTS LOCATED AT THE STABILIZATION BUILDING. (DROP INLETS 1–5, A1–A3, 1–1 AND 1–2 AND CULVERTS P24–P27 AND P31–P36 ARE EXISTING STORM WATER STRUCTURE WHICH WERE CONSTRUCTED DURING PHASE 1 OF STABILIZATION BUILDING)

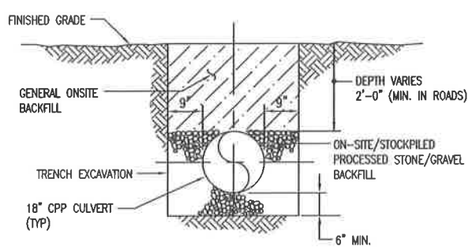

STORM DRAINAGE CULVERT SECTION AT STABILIZATION BUILDING
N.T.S.

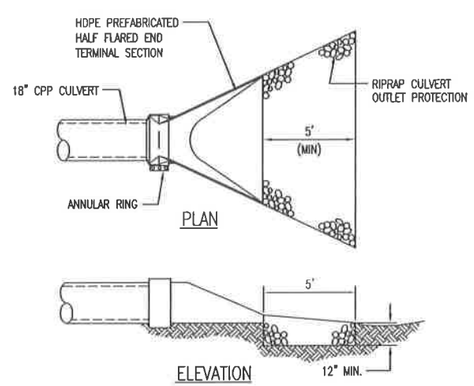

CULVERT INLET/OUTLET PROTECTION DETAIL AT STABILIZATION BUILDING
N.T.S.

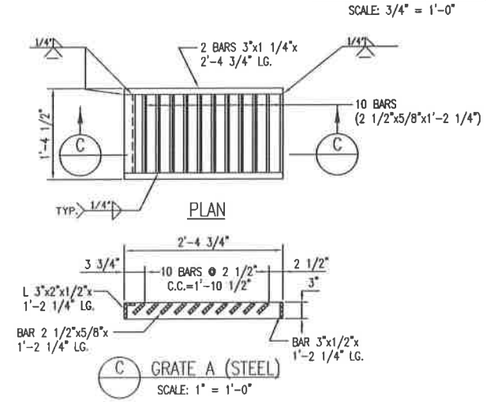

C GRATE A (STEEL)
SCALE: 1" = 1'-0"

REV.	BY	CHK'D	DESCRIPTION	PROJ. ENGR.	SUPV. ENGR.
	DATE	DATE		DATE	DATE
B	RM	–	2003 PERMIT RENEWAL	–	JH
	4/24/03	–		–	4/24/03
A	MK	–	ISSUED FOR PART B PERMIT RENEWAL APPLICATION 06/12/98	–	–
	7/7/98	–		–	–

USEcology Idaho
an American Ecology company

SITE B
GRAND VIEW, IDAHO
US EPA ID NO. IDD 073 114 654

TITLE:
CIVIL
CONTAINMENT BUILDING (STABILIZATION AREA)
TYPICAL STORM DRAIN PROFILES AND DETAILS

DRAWN BY: JZ	DATE 3/05/98	SCALE:	FILE CODE NIDA0838	REV. NO.
CHECKED	DATE	ENGINEER	DATE	DWG. NO. PRMI–D04	B
PROJ. MGR.	DATE	APPROVED	DATE	PROJ. NO. PRMI	

DWG. NO. PRMI-R31
PROJ. NO. PRMI

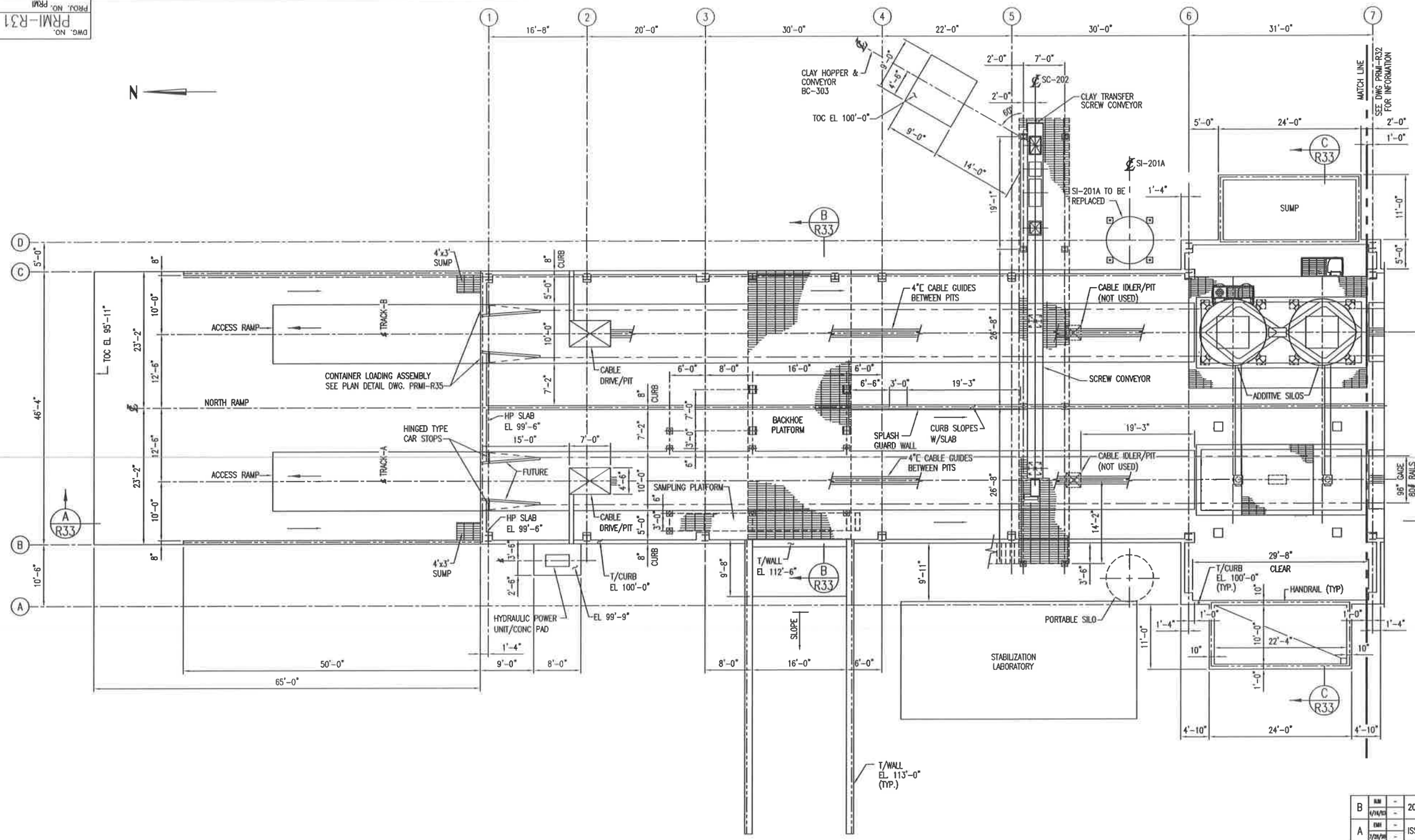

REV.	BY / DATE	CHK'D / DATE	DESCRIPTION	PROJ. ENGR / DATE	ELEC. ENGR / DATE
B	RJM / 4/14/03	- / -	2003 PERMIT RENEWAL	- / -	JM / 4/16/03
A	EMH / 7/28/98	- / -	ISSUED FOR B PERMIT RENEWAL APPLICATION	- / -	- / -

USEcology Idaho
an American Ecology company

SITE B
GRAND VIEW, IDAHO
US EPA ID NO. IDD 073 114 654

TITLE:
GENERAL ARRANGEMENT
STABILIZATION FACILITY
TYPICAL PLAN – SHEET 1

DRAWN BY: JZ	DATE 1/28/98	SCALE:	FILE CODE PRMIR31B	REV. NO.
CHECKED	DATE	ENGINEER	DATE	DWG. NO. PRMI-R31	B
PROJ. MGR.	DATE	APPROVED	DATE	PROJ. NO. PRMI	

DWG. NO. PRMI-R32
PROJ. NO. PRMI

MATCH LINE SEE DWG PRMI-R31 FOR INFORMATION

ACCESS RAMP (DOWN)
SLOPE
CABLE IDLER/PIT
4"C CABLE GUIDES BETWEEN PITS
℄ TRACK RAIL
CABLE DRIVE UNIT
CABLE IDLER PIT
WHEEL STOP (TYP)
8" CURB
EQUIPMENT PLATFORM
29'-0" CLEAR
70'-0"
T/CURB EL 100'-0"
CURB SLOPES WITH SLAB
HP SLAB EL 99'-6"
EXISTING SPLASH SHIELD
TOC EL 100'-0"
ENCLOSURE
T/CURB EL 100'-4"
6" HIGH EDGE PL 1/2" THK EACH SIDE
CABLE IDLER/PIT
DEFLECTION SHIELD (TYP)
BOT SUMP EL 99'-6"
4'x3' SUMP
HANDRAIL (TYP)
96" GAGE 80# RAILS
16'-0"(TYP)
BOT SUMP EL 102'-6"
T/CURB EL 99'-9"
TRENCH
OPNG
TOS EL 109'-0"
OUTLINE CONTROL CAB
59'-0"
T/WALL EL 109'-0"
H.P. EL. 109'-0"
81'-4"
22'-0"
33'-8"
23'-2"
46'-4"
N

GRAPHIC SCALE
4' 0' 4' 8' 12' 16'

REV.	BY	CHK'D	DESCRIPTION	PROJ ENGR	SUPV ENGR
B	RM	-	2003 PERMIT RENEWAL	-	JI
	5/5/03	-		-	5/5/03
A	BH	-	ISSUED FOR B PERMIT RENEWAL APPLICATION	-	-
	1/28/98	-		-	-

USEcology Idaho
an American Ecology company

SITE B
GRAND VIEW, IDAHO
US EPA ID NO. IDD 073 114 654

TITLE: GENERAL ARRANGEMENT STABILIZATION FACILITY PLAN – SHEET 2

DRAWN BY: JZ DATE 1/28/98	SCALE:	FILE CODE PRMP132B	REV. NO.
CHECKED DATE	ENGINEER DATE	DWG. NO. PRMI-R32	B
PROJ. MGR. DATE	APPROVED DATE	PROJ. NO. PRMI	

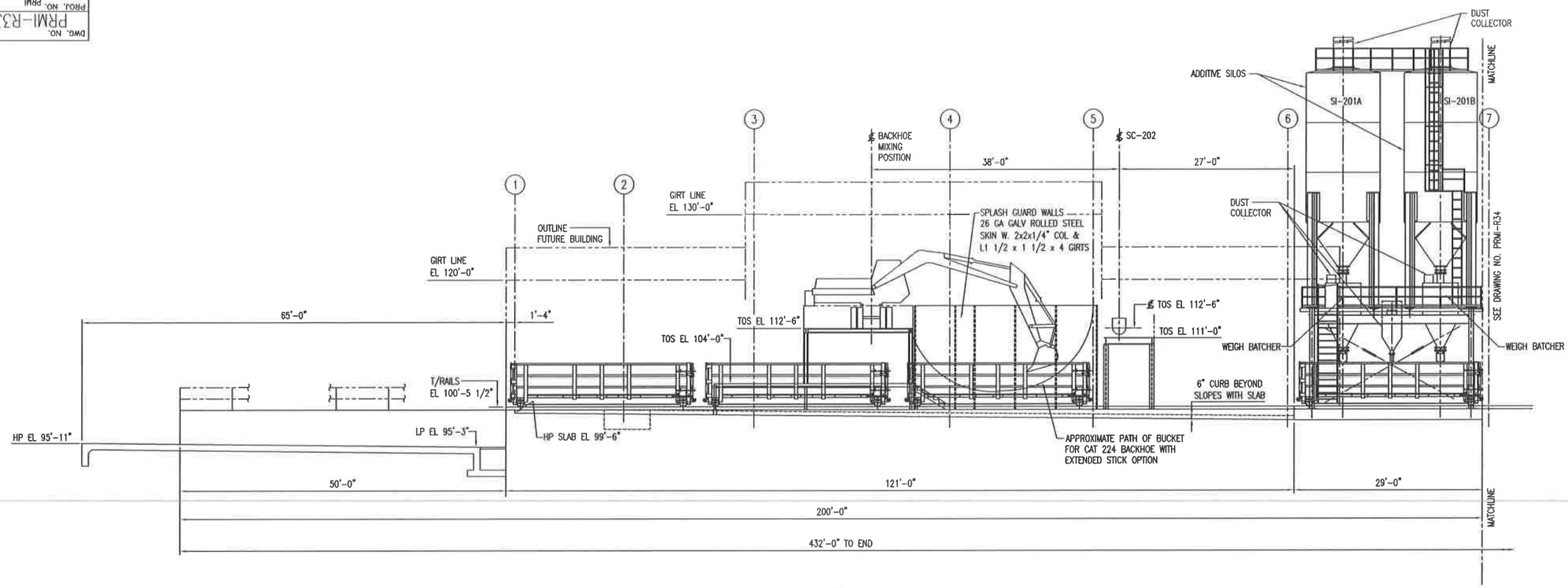

SECTION A R31
SCALE: 1/8"=1'-0"

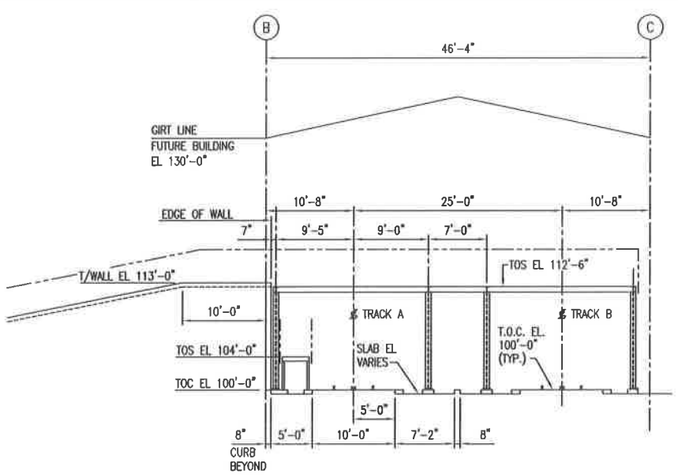

SECTION B R31
SCALE: 1/8"=1'-0"

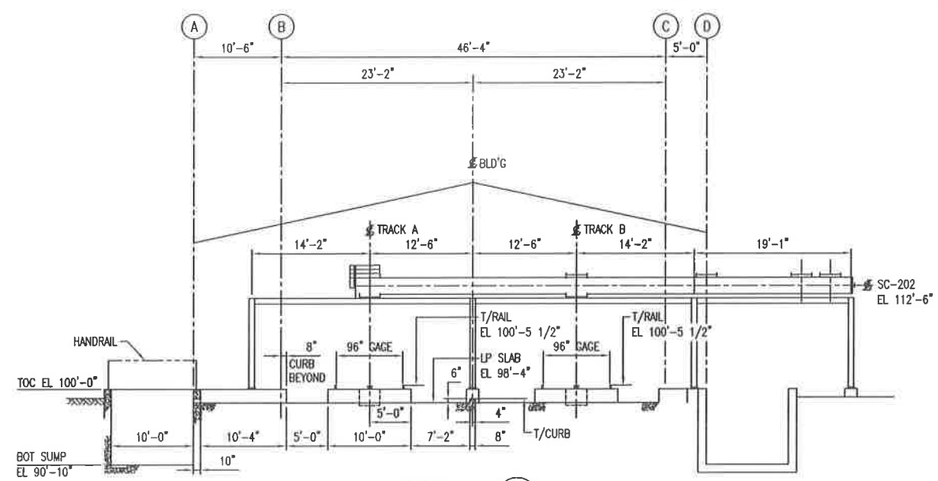

SECTION C R31
SCALE: 1/8"=1'-0"

REV.	BY / DATE	CHK'D / DATE	DESCRIPTION	PROJ. ENGR. / DATE	SUPV. ENGR. / DATE
B	BJK 5/9/00	- -	2003 PERMIT RENEWAL	- -	JH 5/9/00
A	DBI 7/28/98	- -	ISSUED FOR B PERMIT RENEWAL APPLICATION	- -	- -

USEcology Idaho
an American Ecology company

SITE B
GRAND VIEW, IDAHO
US EPA ID NO. IDD 073 114 654

TITLE: GENERAL ARRANGEMENT STABILIZATION FACILITY SECTIONS – SHEET 1

DRAWN BY: JZ. DATE 4/09/98	SCALE:	FILE CODE PRMIR33B	REV. NO.
CHECKED DATE	ENGINEER DATE	DWG. NO. PRMI-R33	B
PROJ. MGR. DATE	APPROVED DATE	PROJ. NO. PRMI	

DWG. NO. PRMI-R33
PROJ. NO. PRMI

DWG. NO. PRMI-R34
PROJ. NO. PRMI

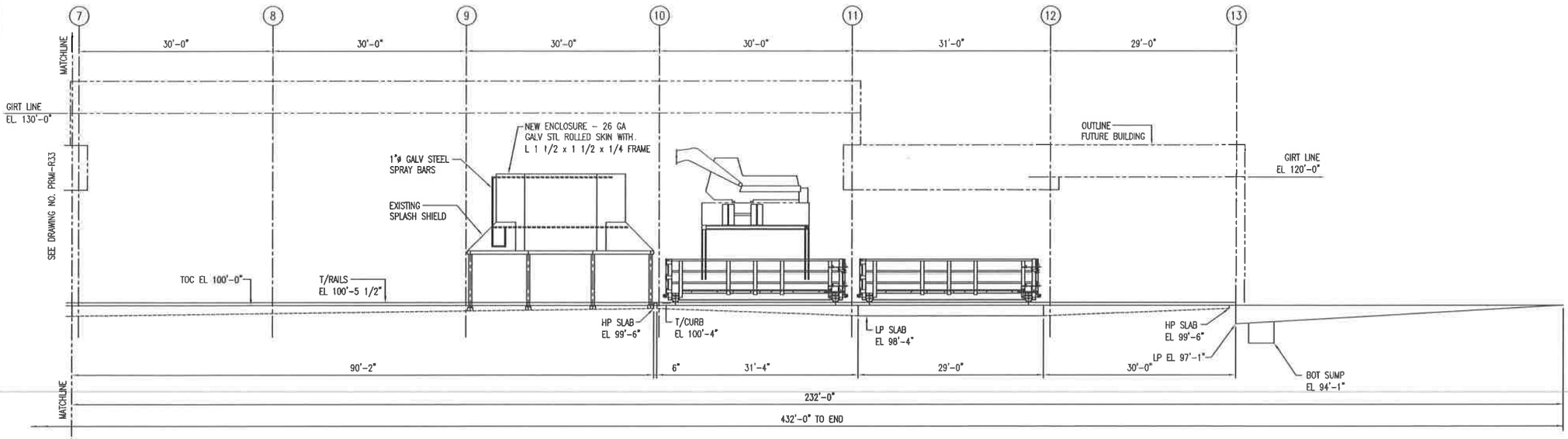

SECTION D R32
SCALE: 1/8"=1'-0"

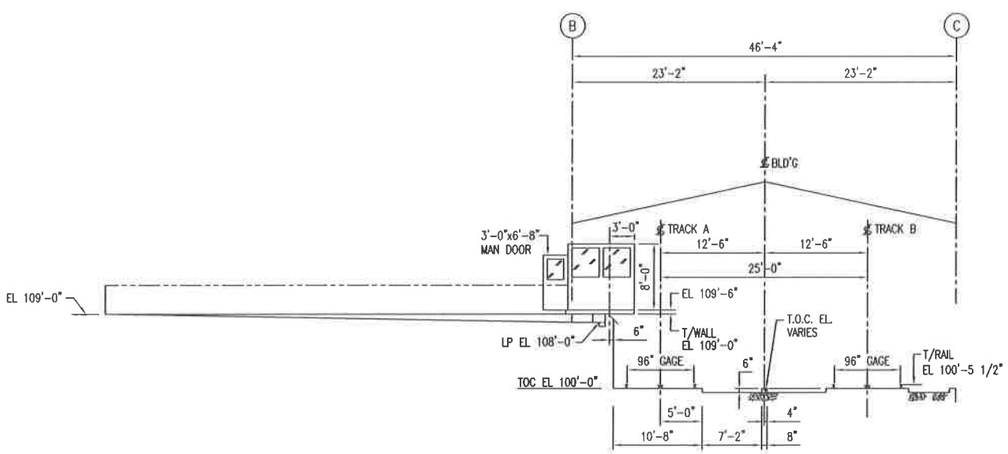

SECTION E R32
SCALE: 1/8"=1'-0"

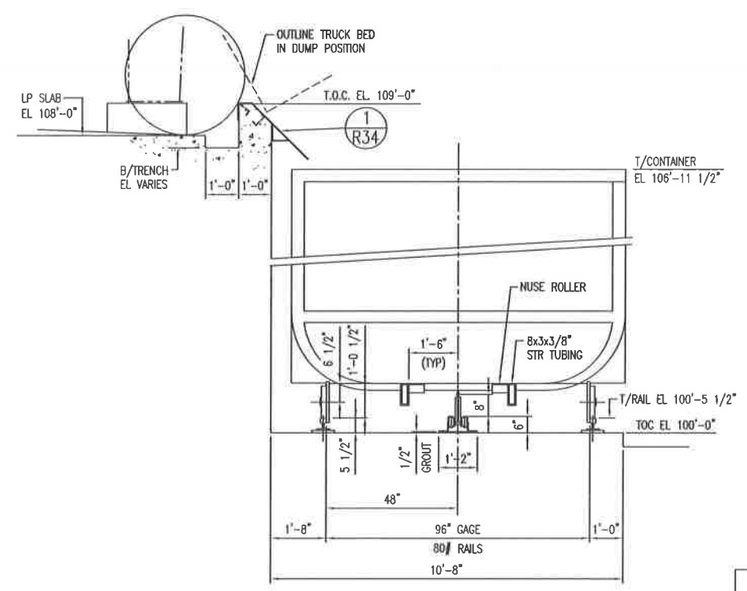

SECTION F R32
SCALE: 1/2"=1'-0"

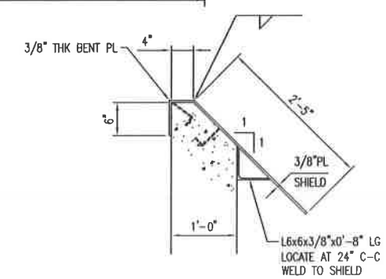

DEFLECTION SHIELD
TYP 4 PLACES

DETAIL 1 R34
SCALE: 1"=1'-0"

REV.	BY / DATE	CHK'D / DATE	DESCRIPTION	PROJ. ENGR. / DATE	SUPV. ENGR. / DATE
B	RJH / 4/14/03	- / -	2003 PERMIT RENEWAL	- / -	JH / 4/14/03
A	DMI / 1/29/98	- / -	ISSUED FOR B PERMIT RENEWAL APPLICATION	- / -	- / -

USEcology Idaho
an American Ecology company

SITE B
GRAND VIEW, IDAHO
US EPA ID NO. IDD 073 114 654

TITLE:
GENERAL ARRANGEMENT
CONTAINMENT BUILDING (STABILIZATION AREA)
TYPICAL SECTIONS - SHEET 2

DRAWN BY: JZ	DATE 4/14/98	SCALE: 1/8"=1'-0"	FILE CODE PRMR34B	REV. NO.
CHECKED	DATE	ENGINEER	DATE	DWG. NO. PRMI-R34	B
PROJ. MGR.	DATE	APPROVED	DATE	PROJ. NO. PRMI	

DWG. NO. PRMI-R35
PROJ. NO. PRMI

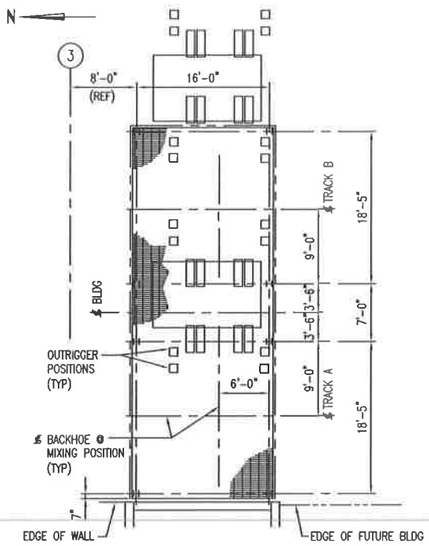

PLAN BACKHOE PLATFORM
SCALE: 1/8"=1'-0"
TOS EL 112'-6"

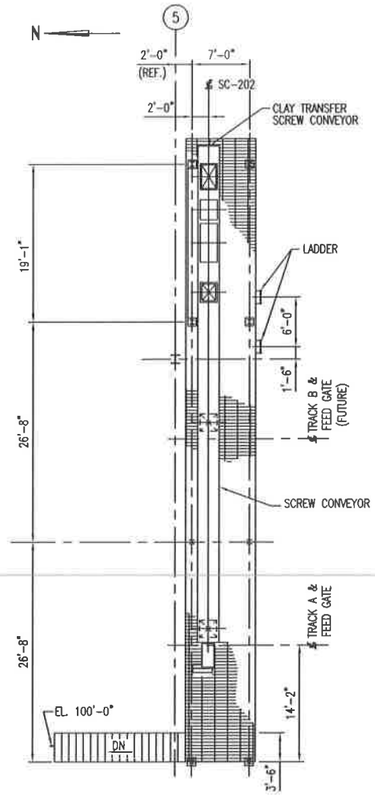

PLAN SCREW CONVEYOR PLATFORM
SCALE: 1/8"=1'-0"
TOS EL 111'-0'

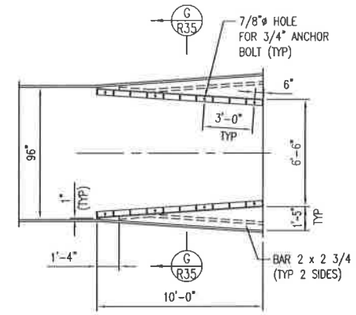

PLAN
CONTAINER LOADING ASS'Y
SCALE: 1/4"=1'-0"

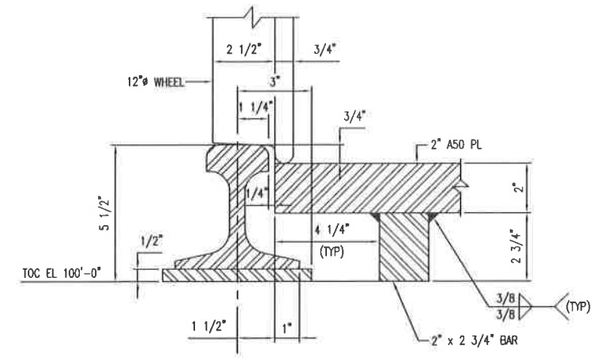

DETAIL 2 R35
SCALE: 3/8"=1"

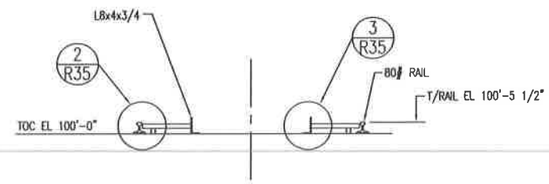

SECTION G R35
SCALE: 3/8"=1'-0"

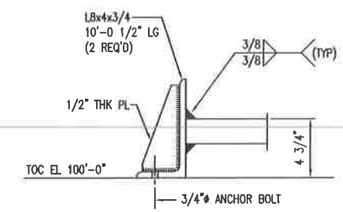

DETAIL 3 R35
SCALE: 3/16"=1"

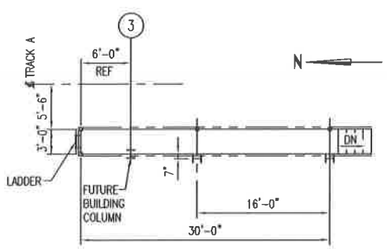

PLAN – SAMPLE ACCESS PLATFORM
TOS EL 104'-0"
SCALE: 1/8"=1'-0"

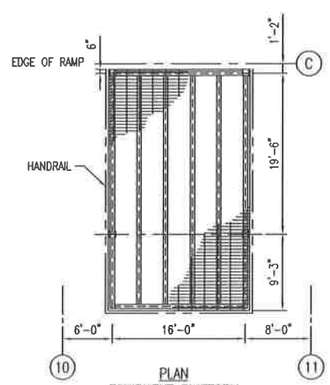

PLAN
EQUIPMENT PLATFORM
TOS EL 112'-6"
SCALE: 1/8"=1'-0"

REV.	BY / DATE	CHK'D / DATE	DESCRIPTION	PROJ. ENGR / DATE	SUPV. ENGR / DATE
B	RM / 5/5/10	- / -	2003 PERMIT RENEWAL	- / -	JH / 5/5/10
A	BM / 1/28/98	- / -	ISSUED FOR B PERMIT RENEWAL APPLICATION	- / -	- / -

USEcology Idaho
an American Ecology company

SITE B
GRAND VIEW, IDAHO
US EPA ID NO. IDD 073 114 654

TITLE: GENERAL ARRANGEMENT STABILIZATION FACILITY SECTIONS – SHEET 3

DRAWN BY: JZ DATE 1/28/98	SCALE:	FILE CODE: PRMIR35B	REV. NO.
CHECKED DATE	ENGINEER DATE	DWG. NO. PRMI-R35	B
PROJ. MGR. DATE	APPROVED DATE	PROJ. NO. PRMI	

Drawing Number	Drawing Title	Reference
	Container Management Units, Storage Pads, and RCRA/TSCA/PCB Processing and Storage Building	
PRMI-C11	Grand View Idaho - Storage Pad No. 4 and Process Plant Pad Plans and Sections (Note: Includes Leachate Tanks)	C, D, I
PRMI-C12	Civil - Container Storage Area Pad No. 4 and Process Plant Pad Sections	C, D, I
PRMI-C13	Civil - Container Storage Area Pad No. 4 and Process Plant Pad Sections & Details	C, D, I
PRMI-C14	Civil- Container Storage Area Pad No. 4 and Process Plant Pad Plans and Sections	I
PRMI-C15	Civil - Container Storage Area Pad No. 4 and Process Plant Pad Plans, Sections and Details	I
PRMI-C16	Civil - Container Storage Pad No. 7 Storage and Processing Areas Grading Plan	C, D, I
PRMI-C17	Civil - Container Storage Pad No. 7 Storage and Processing Areas Sections and Details	C, D, I
PRMI-R11	Typical General Arrangement Container Storage Areas PAD NOS. 4 & 5 and Plant PAD	C, D, I

DWG. NO. PRMI-C11
PROJ. NO. PRMI

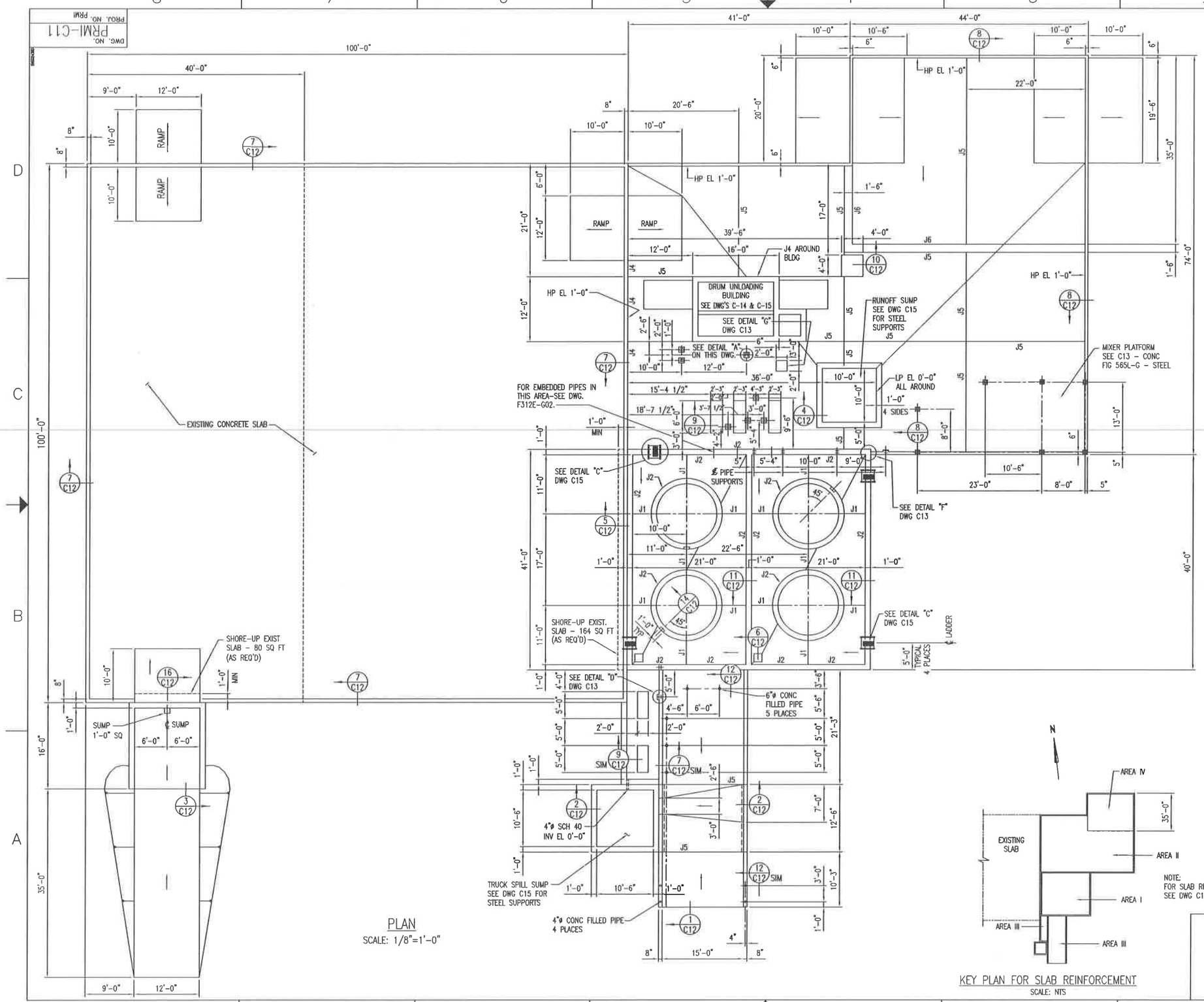

PLAN
SCALE: 1/8"=1'-0"

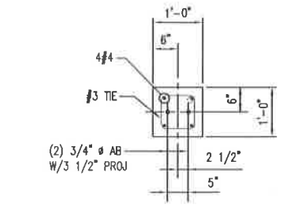

PLAN

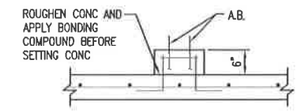

SECTION

DETAIL "A"
SCALE: 3/4"=1'-0"
7 REQ'D

NOTE:
CONCRETE SHALL HAVE A 28 DAY STRENGTH OF NOT LESS THAN 3000 PSI.
REINFORCEMENT SHALL BE GRADE 40.

NOTE:
FOR SLAB REINFORCEMENT SEE DWG C13.

KEY PLAN FOR SLAB REINFORCEMENT
SCALE: NTS

REV.	BY / DATE	CHK'D / DATE	DESCRIPTION	PROJ. ENGR / DATE	SUPV. ENGR / DATE
B	RM / 1/9/03	- / -	2003 PERMIT RENEWAL	- / -	JI / 1/9/03
A	DM / -	- / -	ISSUED FOR B PERMIT RENEWAL APPLICATION	- / -	- / -

USEcology Idaho
an American Ecology company

SITE B
GRAND VIEW, IDAHO
US EPA ID NO. IDD 073 114 654

TITLE:
GRAND VIEW, IDAHO
PAD No. 4 AND PROCESS PLANT PAD
PLANS AND SECTIONS

DRAWN BY: JZ	DATE 12/30/97	SCALE:	FILE CODE PRMIC111B	REV. NO.
CHECKED	DATE	ENGINEER	DATE	DWG. NO. PRMI-C11	
PROJ. MGR.	DATE	APPROVED	DATE	PROJ. NO. PRMI	B

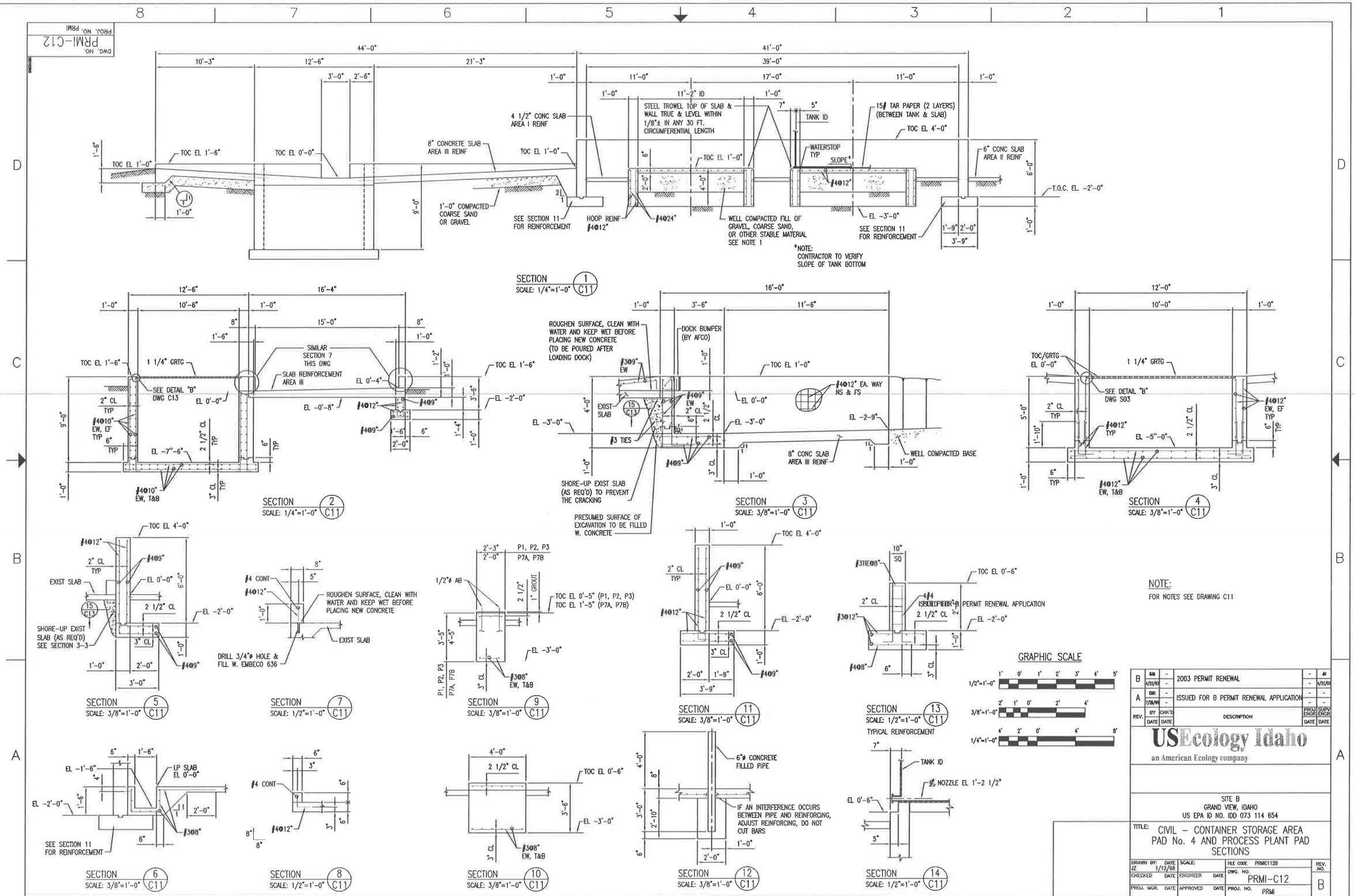
SECTION 1 C11
SCALE: 1/4"=1'-0"
4 1/2" CONC SLAB AREA I REINF
8" CONCRETE SLAB AREA III REINF
STEEL TROWEL TOP OF SLAB & WALL TRUE & LEVEL WITHIN 1/8"± IN ANY 30 FT. CIRCUMFERENTIAL LENGTH
15# TAR PAPER (2 LAYERS) (BETWEEN TANK & SLAB)
TOC EL 4'-0"
TOC EL 1'-6"
TOC EL 0'-0"
TOC EL 1'-0"
WATERSTOP TYP
SLOPE*
6" CONC SLAB AREA II REINF
T.O.C. EL -2'-0"
1'-0" COMPACTED COARSE SAND OR GRAVEL
SEE SECTION 11 FOR REINFORCEMENT
HOOP REINF #4@12"
#4@24"
WELL COMPACTED FILL OF GRAVEL, COARSE SAND, OR OTHER STABLE MATERIAL SEE NOTE 1
EL -3'-0"
*NOTE: CONTRACTOR TO VERIFY SLOPE OF TANK BOTTOM
SECTION 2 C11
SCALE: 1/4"=1'-0"
SIMILAR SECTION 7 THIS DWG
SLAB REINFORCEMENT AREA III
1 1/4" GRTG
SEE DETAIL "B" DWG C13
EL -7'-6"
#4@10" EW, T&B
SECTION 3 C11
SCALE: 3/8"=1'-0"
ROUGHEN SURFACE, CLEAN WITH WATER AND KEEP WET BEFORE PLACING NEW CONCRETE (TO BE POURED AFTER LOADING DOCK)
DOCK BUMPER (BY AFCO)
#4@12" EA. WAY NS & FS
EXIST SLAB
#3 TIES
8" CONC SLAB AREA III REINF
WELL COMPACTED BASE
SHORE-UP EXIST SLAB (AS REQ'D) TO PREVENT THE CRACKING
PRESUMED SURFACE OF EXCAVATION TO BE FILLED W. CONCRETE
SECTION 4 C11
SCALE: 3/8"=1'-0"
TOC/GRTG EL 0'-0"
EL -5'-0"
#4@12" EW, T&B
SECTION 5 C11
SCALE: 3/8"=1'-0"
SHORE-UP EXIST SLAB (AS REQ'D) SEE SECTION 3-3
SECTION 7 C11
SCALE: 1/2"=1'-0"
#4 CONT
ROUGHEN SURFACE, CLEAN WITH WATER AND KEEP WET BEFORE PLACING NEW CONCRETE
DRILL 3/4"ø HOLE & FILL W. EMBECO 636
SECTION 9 C11
SCALE: 3/8"=1'-0"
1/2"ø AB
P1, P2, P3 P7A, P7B
1" GROUT
TOC EL 0'-5" (P1, P2, P3)
TOC EL 1'-5" (P7A, P7B)
#3@8" EW, T&B
SECTION 11 C11
SCALE: 3/8"=1'-0"
SECTION 13 C11
SCALE: 1/2"=1'-0"
TYPICAL REINFORCEMENT
#3@12"
#4@8"
PERMIT RENEWAL APPLICATION
SECTION 6 C11
SCALE: 3/8"=1'-0"
LP SLAB EL 0'-0"
SEE SECTION 11 FOR REINFORCEMENT
SECTION 8 C11
SCALE: 1/2"=1'-0"
SECTION 10 C11
SCALE: 3/8"=1'-0"
#3@8" EW, T&B
SECTION 12 C11
SCALE: 3/8"=1'-0"
6"ø CONCRETE FILLED PIPE
IF AN INTERFERENCE OCCURS BETWEEN PIPE AND REINFORCING, ADJUST REINFORCING, DO NOT CUT BARS
SECTION 14 C11
SCALE: 1/2"=1'-0"
TANK ID
NOZZLE EL 1'-2 1/2"
GRAPHIC SCALE
1/2"=1'-0"
3/8"=1'-0"
1/4"=1'-0"
NOTE:
FOR NOTES SEE DRAWING C11
B 2003 PERMIT RENEWAL
A ISSUED FOR B PERMIT RENEWAL APPLICATION
REV. BY DATE CHK'D DATE DESCRIPTION PROJ ENGR DATE SUPV ENGR DATE
USEcology Idaho
an American Ecology company
SITE B
GRAND VIEW, IDAHO
US EPA ID NO. IDD 073 114 654
TITLE: CIVIL – CONTAINER STORAGE AREA PAD No. 4 AND PROCESS PLANT PAD SECTIONS
DRAWN BY: JZ DATE 1/12/98
CHECKED DATE
PROJ. MGR. DATE
SCALE:
ENGINEER DATE
APPROVED DATE
FILE CODE PRMIC112B
DWG. NO. PRMI-C12
PROJ. NO. PRMI
REV. NO. B
DWG. NO. PRMI-C12
PROJ. NO. PRMI

DWG. NO. PRMI-C13
PROJ. NO. PRMI

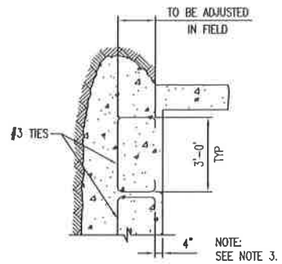

SECTION 15 C12
SCALE: 3/8"=1'-0"

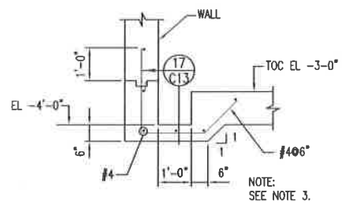

SECTION 16 C11
SCALE: 1/2"=1'-0"

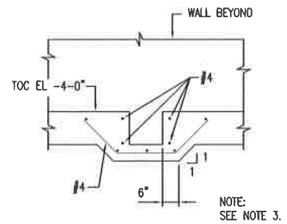

SECTION 17 C13
SCALE: 1/2"=1'-0"

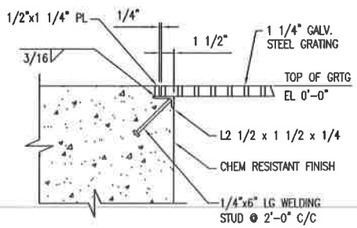

DETAIL B C11
SCALE: 1 1/2"=1'-0"

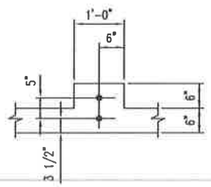

DETAIL C C11
SCALE: 3/4"=1'-0"

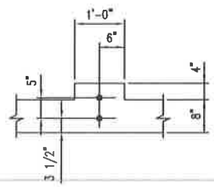

DETAIL D C11
SCALE: 3/4"=1'-0"

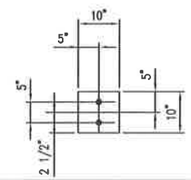

DETAIL E C11
SCALE: 3/4"=1'-0"
7 PLACES

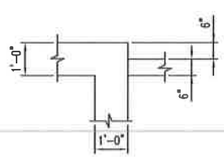

DETAIL F C11
SCALE: 1/2"=1'-0"

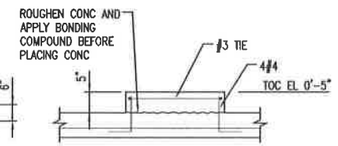

DETAIL G C11
SCALE: 3/4"=1'-0"

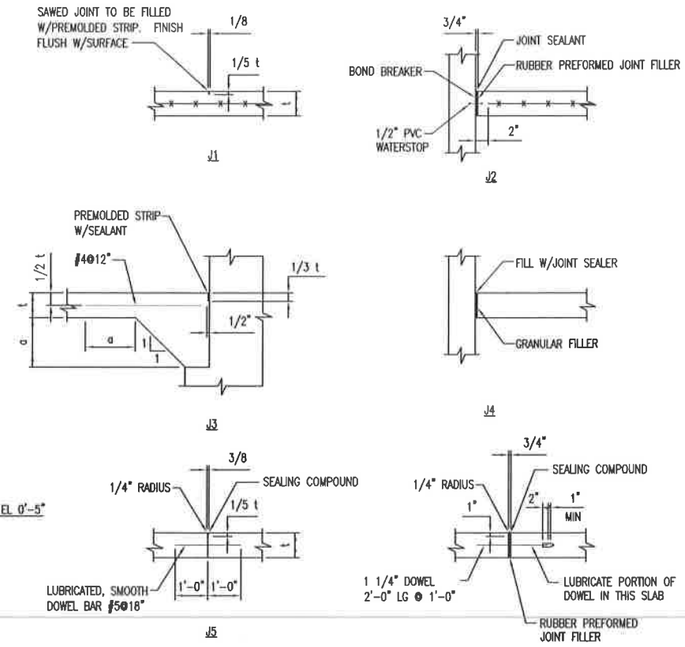

TYPICAL JOINT DETAILS
SCALE: NTS

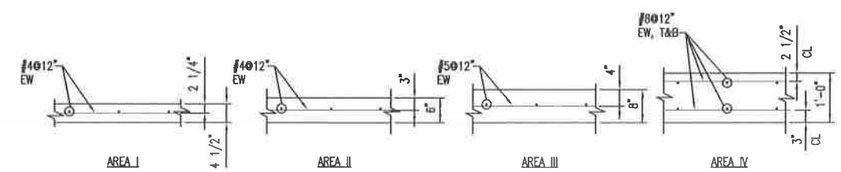

SLAB REINFORCEMENT DETAILS
SCALE: 3/4"=1'-0"

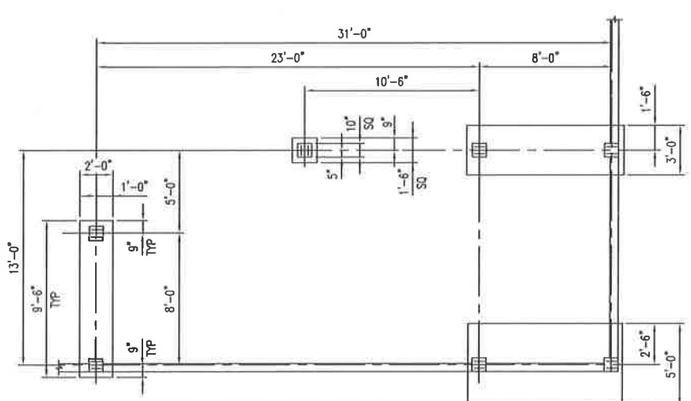

MIXER PLATFORM FOUNDATION PLAN
SCALE: 1/4"=1'-0"

REV.	BY / DATE	CHK'D / DATE	DESCRIPTION	PROJ. ENGR / DATE	SUPV. ENGR / DATE
B	BM / 4/22/03	- / -	2003 PERMIT RENEWAL	- / -	JH / 4/22/03
A	DH / 7/28/98	- / -	ISSUED FOR B PERMIT RENEWAL APPLICATION	- / -	- / -

USEcology Idaho
an American Ecology company

SITE B
GRAND VIEW, IDAHO
US EPA ID NO. IDD 073 114 654

TITLE: CIVIL – CONTAINER STORAGE AREA PAD No. 4 AND PROCESS PLANT PAD SECTIONS & DETAILS

DRAWN BY: JZ	DATE 01/14/98	SCALE:	FILE CODE PRMIC113B	REV. NO.
CHECKED	DATE	ENGINEER	DATE	DWG. NO. PRMI-C13	B
PROJ. MGR.	DATE	APPROVED	DATE	PROJ. NO. PRMI	

DWG. NO. PRMI-C14
PROJ. NO. PRMI

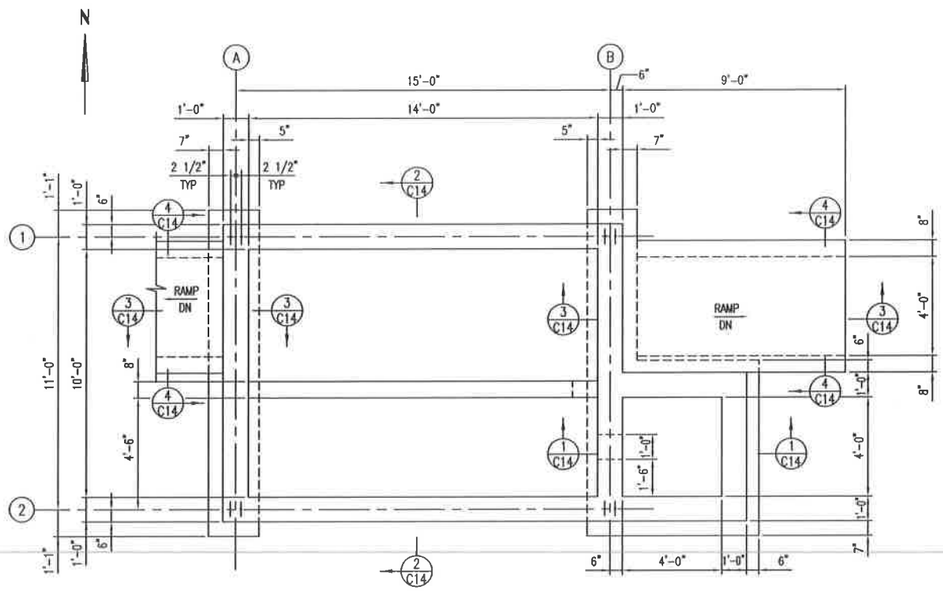

DRUM UNLOADING BUILDING FOUNDATION PLAN
SCALE: 3/8"=1'-0"

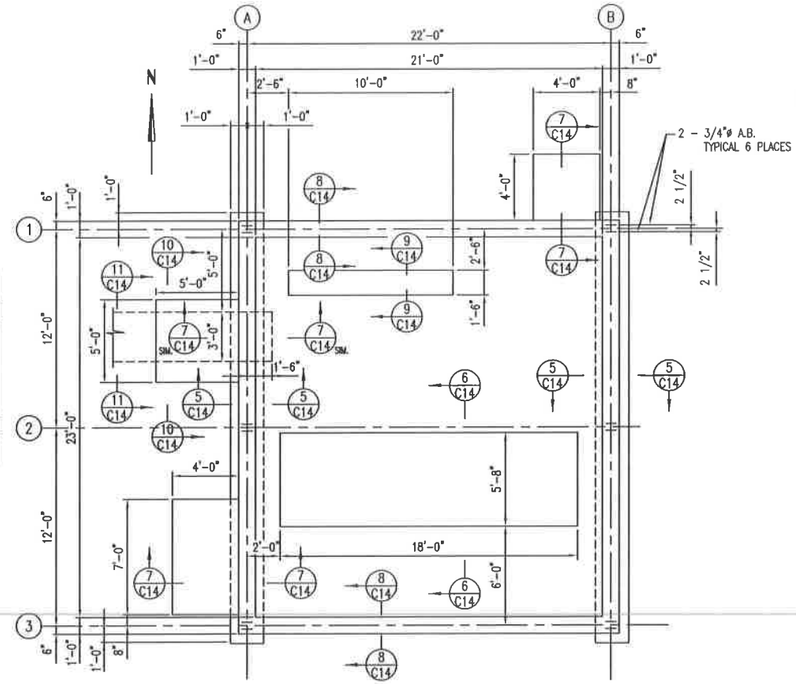

SERVICE BUILDING FOUNDATION PLAN
SCALE: 1/4"=1'-0"

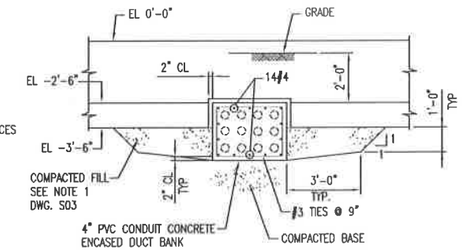

SECTION 10 C14
SCALE: 3/8"=1'-0"

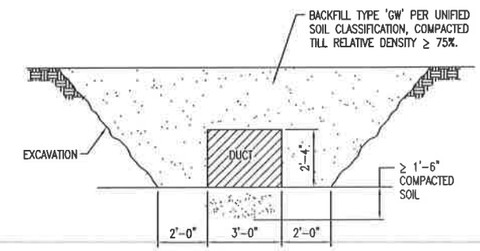

SECTION 11 C14
SCALE: 3/8"=1'-0"

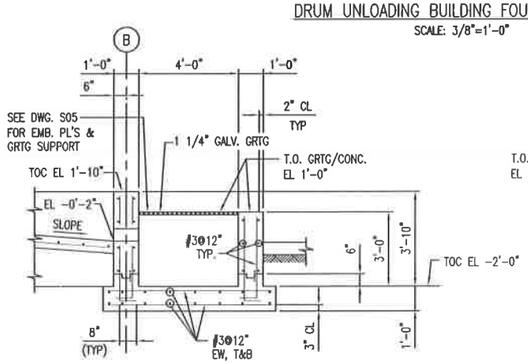

SECTION 1 C14
SCALE: 3/8"=1'-0"

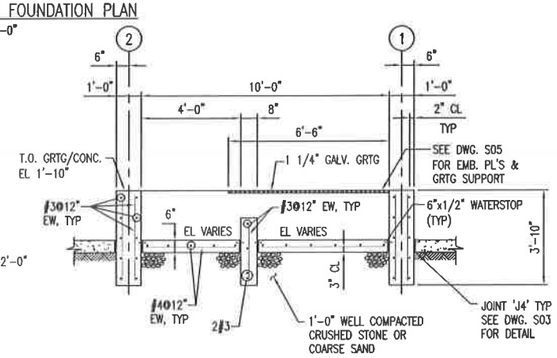

SECTION 2 C14
SCALE: 3/8"=1'-0"

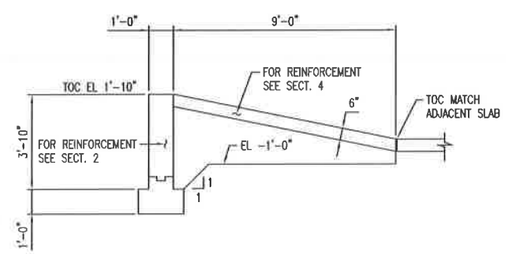

SECTION 3 C14
SCALE: 3/8"=1'-0"

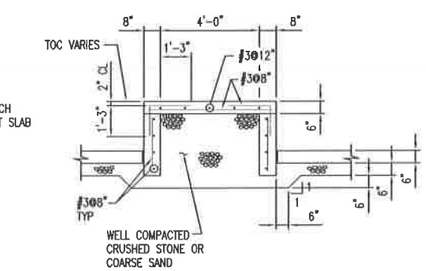

SECTION 4 C14
SCALE: 3/8"=1'-0"

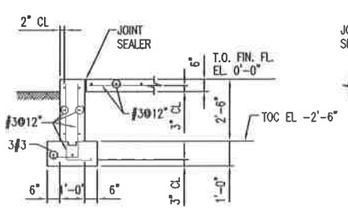

SECTION 5 C14
SCALE: 3/8"=1'-0"

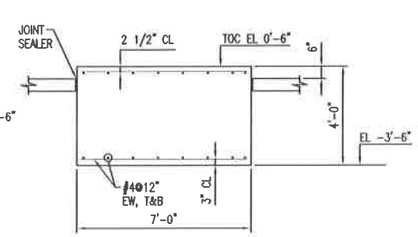

SECTION 6 C14
SCALE: 3/8"=1'-0"

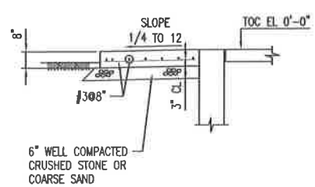

SECTION 7 C14
SCALE: 3/8"=1'-0"

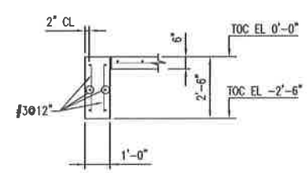

SECTION 8 C14
SCALE: 3/8"=1'-0"

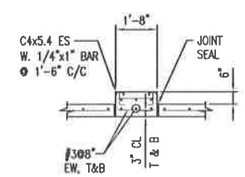

SECTION 9 C14
SCALE: 3/8"=1'-0"

REV.	BY / DATE	CHK'D / DATE	DESCRIPTION	PROJ ENGR / DATE	SUPV ENGR / DATE
B	AM / 5/5/03	- / -	2003 PERMIT RENEWAL	- / -	JH / 5/5/03
A	DM / 7/29/98	- / -	ISSUED FOR B PERMIT RENEWAL APPLICATION	- / -	- / -

USEcology Idaho
an American Ecology company

SITE B
GRAND VIEW, IDAHO
US EPA ID NO. IDD 073 114 654

TITLE: CIVIL – CONTAINER STORAGE AREA PAD No. 4 AND PROCESS PLANT PAD PLANS AND SECTIONS

DRAWN BY: JZ	DATE 12/30/97	SCALE:	FILE CODE PRMIC114B	REV. NO.
CHECKED	DATE	ENGINEER / DATE	DWG. NO. PRMI-C14	B
PROJ. MGR.	DATE	APPROVED / DATE	PROJ. NO. PRMI	

DWG. NO. PRMI-C15
PROJ. NO. PRMI

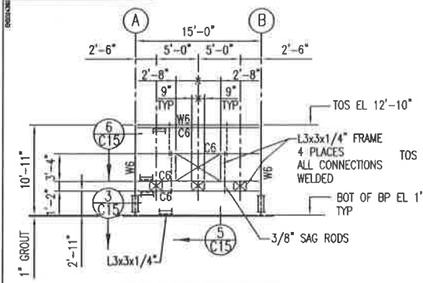

GIRT ELEVATION ALONG COLUMN LINE "2"
SCALE: 1/8"=1'-0"

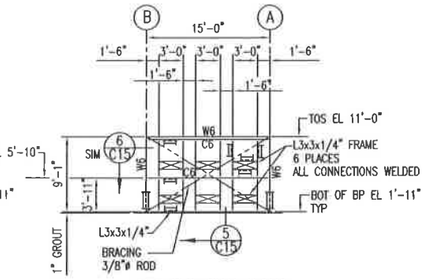

GIRT ELEVATION ALONG COLUMN LINE "1"
SCALE: 1/8"=1'-0"

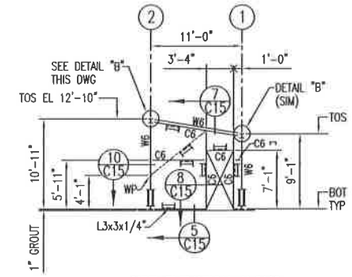

GIRT ELEVATION ALONG COLUMN LINE "B"
SCALE: 1/8"=1'-0"

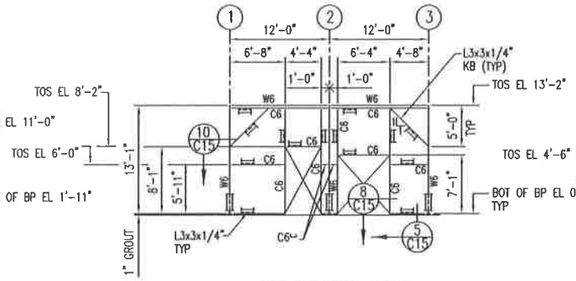

GIRT ELEVATION ALONG COLUMN LINE "A"
SCALE: 1/8"=1'-0"

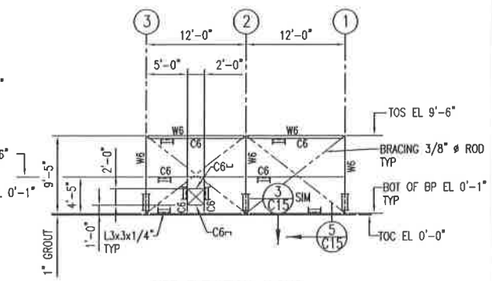

GIRT ELEVATION ALONG COLUMN LINE "B"
SCALE: 1/8"=1'-0"

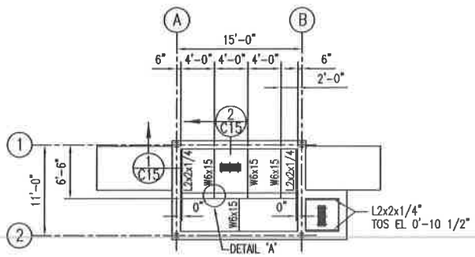

FLOOR PLAN
TOS 1'-8 1/2" UNO
SCALE: 1/8"=1'-0"

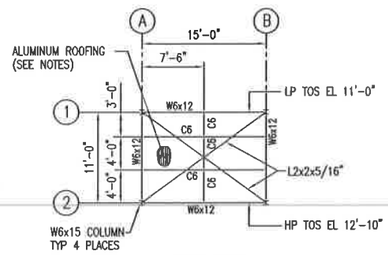

ROOF PLAN
SCALE: 1/8"=1'-0"

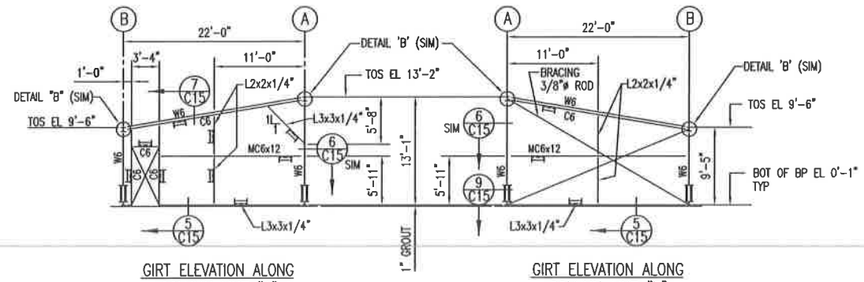

GIRT ELEVATION ALONG COLUMN LINE "1"
SCALE: 1/8"=1'-0"

GIRT ELEVATION ALONG COLUMN LINE "3"
SCALE: 1/8"=1'-0"

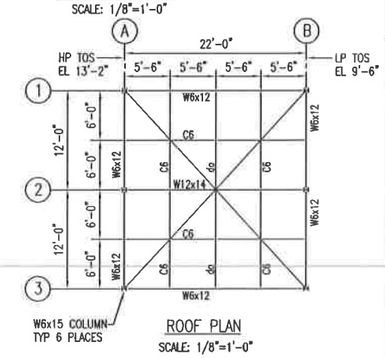

ROOF PLAN
SCALE: 1/8"=1'-0"

DRUM UNLOADING BUILDING STEEL PLANS AND ELEVATIONS

NOTE: C6 DESIGNATED C6x8.2

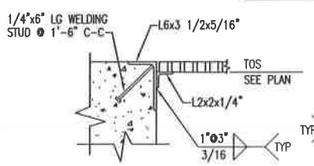

SECTION 1 C15
SCALE: 1 1/2"=1'-0"

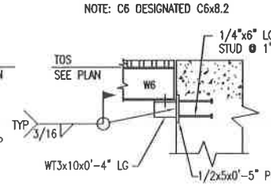

SECTION 2 C15
SCALE: 1"=1'-0"

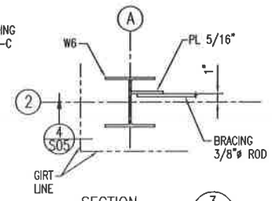

SECTION 3 C15
SCALE: 1 1/2"=1'-0"

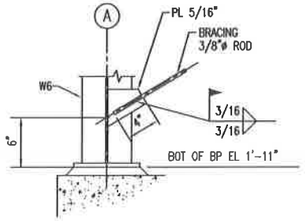

SECTION 4 C15
SCALE: 1 1/2"=1'-0"

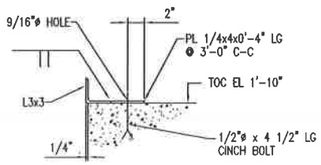

SECTION 5 C15
SCALE: 1 1/2"=1'-0"

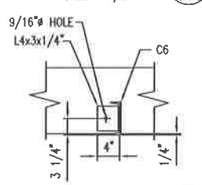

SECTION 8 C15
SCALE: 1"=1'-0"

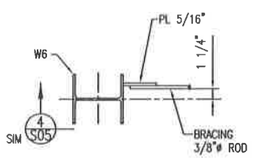

SECTION 9 C15
SCALE: 1 1/2"=1'-0"

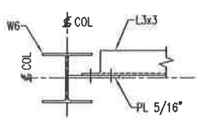

SECTION 10 C15
SCALE: 1 1/2"=1'-0"

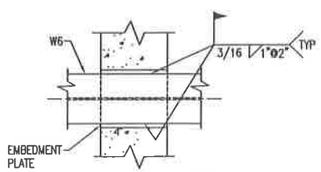

DETAIL A C15
SCALE: 1 1/2"=1'-0"

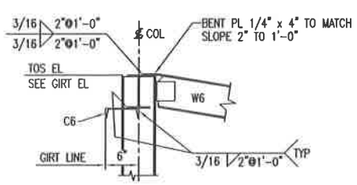

DETAIL B C15
SCALE: 1"=1'-0"

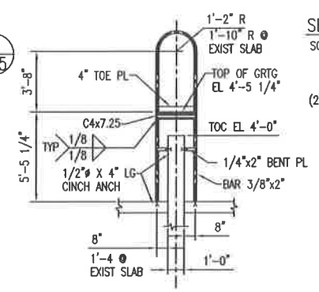

DETAIL C C15
SCALE: 1/4"=1'-0"

SECTION 7 C15
SCALE: 1"=1'-0"

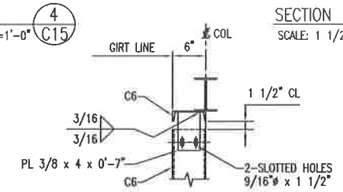

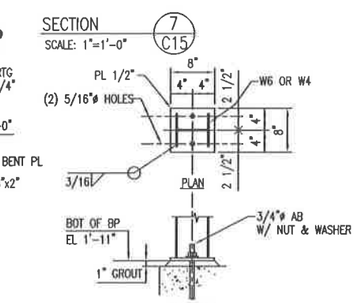

TYPICAL BASE PLATE DETAIL
SCALE: 1"=1'-0"

SERVICE BUILDING STEEL PLAN AND ELEVATIONS

NOTE: C6 DESIGNATED C6x8.2

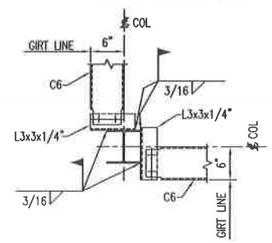

SECTION 6 C15
SCALE: 1"=1'-0"

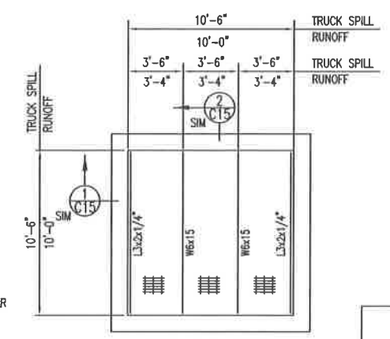

SUMP STEEL PLAN
TOS EL 1'-4 3/4" – TRUCK SPILL
TOS EL -0'-1 1/4" – RUNOFF
SCALE: 1/4"=1'-0"

ANCHOR BOLT SCHEDULE

MARK	TYPE	D	L	H	P	T
AB1	A	3/4"	1'-4"	4"	4"	3"

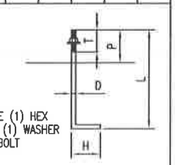

PROVIDE ONE (1) HEX NUT & ONE (1) WASHER WITH EACH BOLT

NOTES:

GRATING – 1 1/4" STEEL GALVANIZED GRATING AS MANUFACTURED BY "GARY GRATING".

STRUCT STEEL – ALL STEEL SHALL CONFORM TO ASTM A-36. SEE SPEC 31.

HANDRAILS – SHALL BE CONSTRUCTED W/ 1 1/4"ø GALVANIZED STEEL PIPE.

REV.	BY / DATE	CHK'D / DATE	DESCRIPTION	PROJ ENGR / DATE	SUPV ENGR / DATE
B	RM 3/5/98	-	2003 PERMIT RENEWAL	-	JH 5/5/98
A	DM 7/28/98	-	ISSUED FOR B PERMIT RENEWAL APPLICATION	-	-

USEcology Idaho
an American Ecology company

SITE B
GRAND VIEW, IDAHO
US EPA ID NO. IDD 073 114 654

TITLE: CIVIL – CONTAINER STORAGE AREA PAD No. 4 AND PROCESS PLANT PAD PLANS, SECTIONS AND DETAILS

DRAWN BY: JZ DATE 1/07/98	SCALE:	FILE CODE PRMIC115B	REV. NO. B
CHECKED DATE	ENGINEER DATE	DWG. NO. PRMI-C15	
PROJ. MGR. DATE	APPROVED DATE	PROJ. NO. PRMI	

DWG. NO. PRMI-C16
PROJ. NO. 120-4133

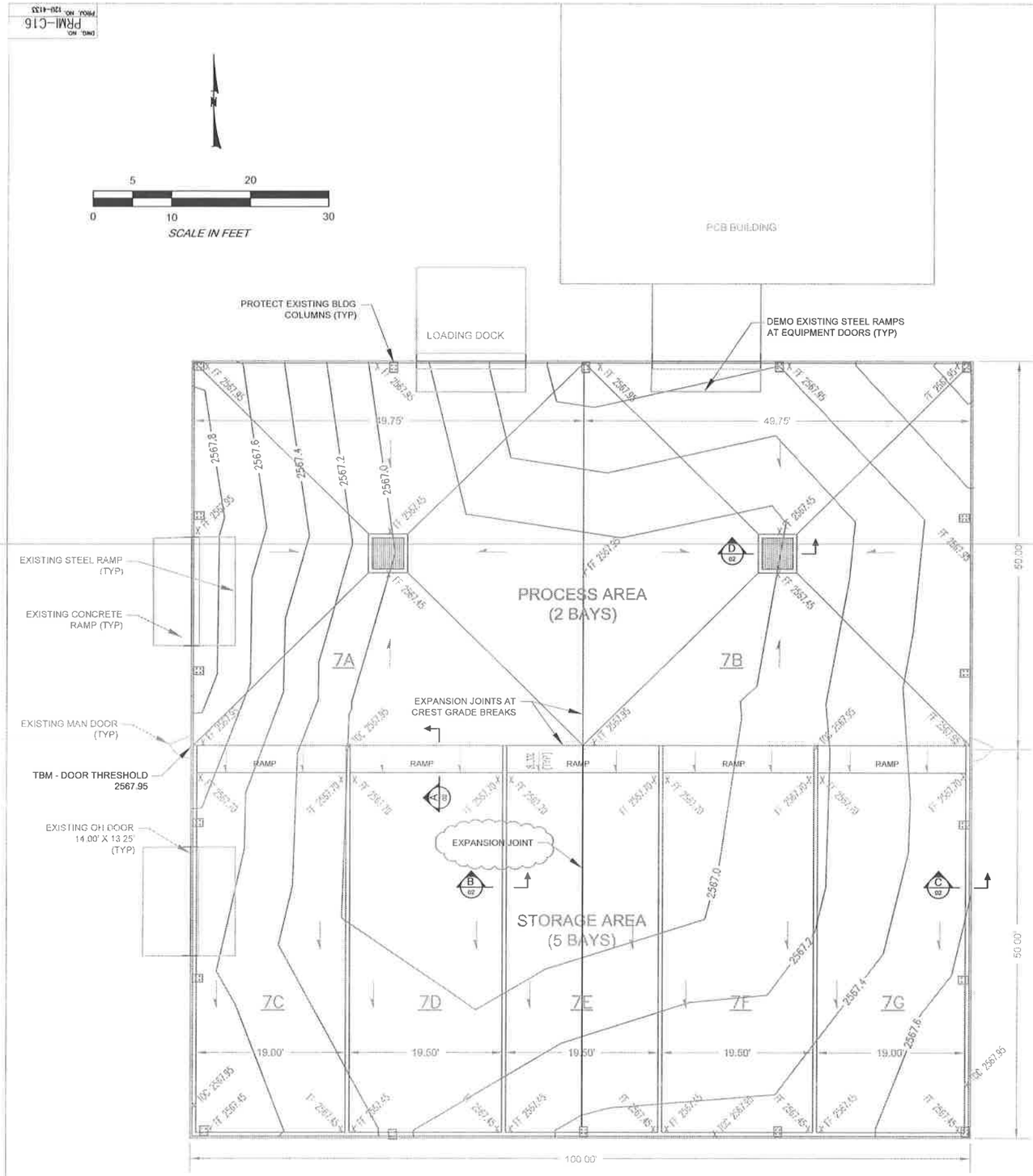

LEGEND

FF	FINISH FLOOR PLAN ELEVATION
TOC	TOP OF CURB PLAN ELEVATION
TBM	TEMPORARY BENCH MARK
	PRE-CONSTRUCTION SUBGRADE TOPOGRAPHY
	EXISTING BUILDING LINE

NOTES:

1. EXCAVATE EXCESS AGGREGATE SUBGRADE MATERIALS AND STOCKPILE AS NEEDED. COMPACT REMAINING AGGREGATE SUBGRADE MATERIALS TO 95% OF MODIFIED PROCTOR (ASTM D 1557).
2. ALL REINFORCING STEEL IS GRADE 60.
3. ALL CONCRETE ON PROJECT REQUIRED TO ACHIEVE 4,000 PSI COMPRESSIVE STRENGTH IN 28 DAYS.
4. FLOOR SLABS SHALL BE CURED WITH AN APPROVED CURING COMPOUND. CURING COMPOUND TO BE COMPATIBLE WITH FINISH MATERIALS.
5. EPOXY COATING TO BE APPLIED ON ALL FINISHED CONCRETE SURFACES.
6. CONSTRUCTION JOINTS AND CONTROL JOINT LAYOUT TO BE APPROVED BY ENGINEER PRIOR TO SETTING FORMS.
7. PLACE 3 - #5 X 8'-0" BARS IN SLABS AT RE-ENTRANT CORNERS OF SUMPS.
8. PRE-CONSTRUCTION TOPOGRAPHIC SURVEY OF INTERIOR AGGREGATE SURFACE PERFORMED BY EAGLE LAND SURVEY ON APRIL 28, 2011.
9. DIMENSION LABELS HAVE PRECEDENCE OVER SCALED DIMENSIONS
10. ANY DISCREPANCIES SHALL BE BROUGHT TO THE ATTENTION OF THE ENGINEER.
11. AS BUILT CONTAINMENT VOLUMES SURVEYED BY EAGLE LAND SURVEY ON NOVEMBER 7, 2012.

PAD NO. 7 CONTAINMENT VOLUMES

DESCRIPTION	AS-BUILT SURVEYED CONTAINMENT (GAL)
PROCESS AREA 7A	3,382
PROCESS AREA 7B	3,384
STORAGE AREA 7C	2,290
STORAGE AREA 7D	2,431
STORAGE AREA 7E	2,517
STORAGE AREA 7F	2,277
STORAGE AREA 7G	1,942

REV.	BY	DATE	DESCRIPTION	PROJ. ENGR.	PROJ. ENGR.
B	W	10/2/12	AS-BUILT CONDITIONS		
A	W	1/11/12	REGULATORY REVIEW – PERMIT MODIFICATION		

USEcology Idaho
an American Ecology company

SITE B
GRAND VIEW, IDAHO
US EPA ID NO. IDD 073 114 654

TITLE: CONTAINER STORAGE PAD NO. 7 STORAGE AND PROCESSING AREAS GRADING PLAN

DRAWN BY: KE DATE: 3/11 FILE CODE: PRMIC16_REV0B
CHECKED DATE
PROJ. MGR. DATE
DWG. NO. PRMI-C16
PROJ. NO. 120-4113
REV. NO. B

DWG NO. PRMI-C17
PROJ. NO. 120-4133

NOTES:

1. COMPACT UPPER 8 INCHES OF EXISTING SUBGRADE MATERIALS TO 95% OF MODIFIED PROCTOR (ASTM D 1557).
2. PROVIDE 3/4" X 3/4" CHAMFER ON ALL EXPOSED CONCRETE EDGES.
3. EPOXY COATING TO BE APPLIED ON ALL FINISHED CONCRETE SURFACES.
4. CONSTRUCTION JOINTS AND CONTROL JOINT LAYOUT TO BE APPROVED BY ENGINEER PRIOR TO SETTING FORMS.

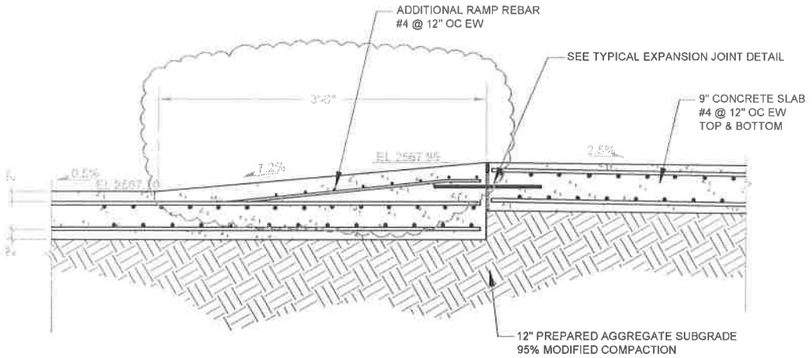

TYPICAL RAMP SECTION (A/01)
N.T.S.

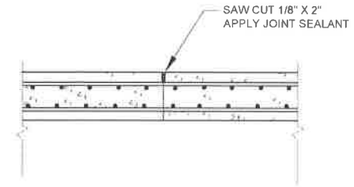

TYPICAL CONTROL JOINT DETAIL

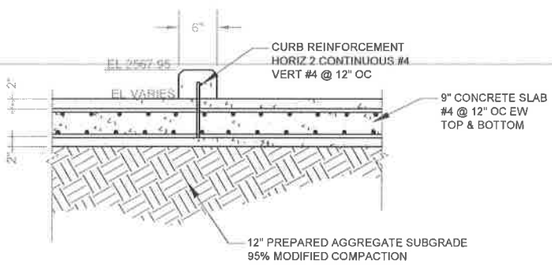

TYPICAL INTER-BAY CURB (B/01)
N.T.S.

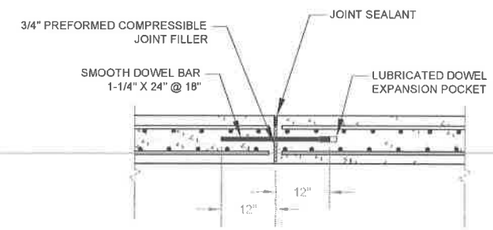

TYPICAL EXPANSION JOINT DETAIL

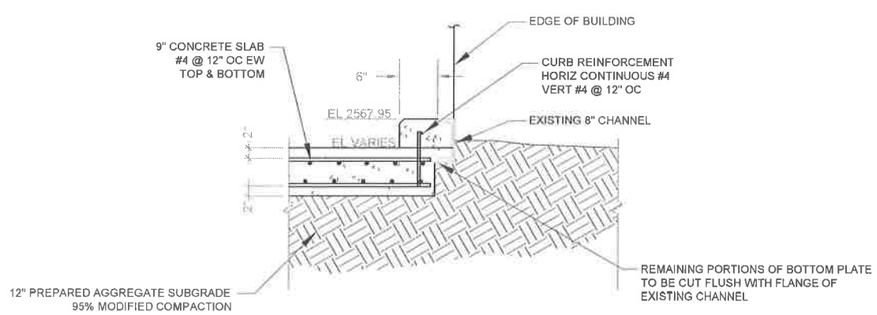

TYPICAL PERIMETER CURB (C/01)
N.T.S.

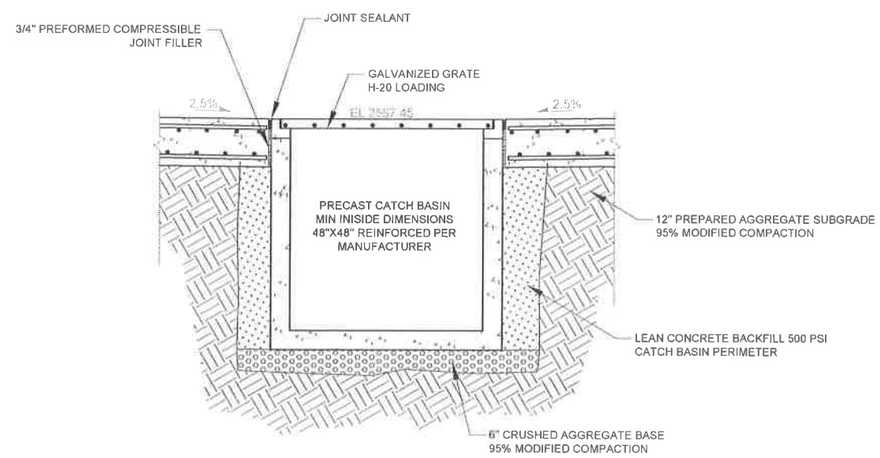

TYPICAL SUMP SECTION (D/01)
N.T.S.

REV.	BY / DATE	CHK'D / DATE	DESCRIPTION	PROJ. MGR. / DATE	PROJ. ENGR. / DATE
B	W 10/5/16		AS-BUILT CONDITIONS		
A	W 1/14/16		REGULATORY REVIEW – PERMIT MODIFICATION		

USEcology Idaho
an American Ecology company

SITE B
GRAND VIEW, IDAHO
US EPA ID NO. IDD 073 114 654

TITLE: CONTAINER STORAGE PAD NO. 7
STORAGE AND PROCESSING AREAS
SECTIONS AND DETAILS

DRAWN BY: W.E. DATE: 3/11 | FILE CODE: PRMIC16_RCRB | DWG. NO.: PRMI-C17 | REV. NO.: B
CHECKED: DATE | PROJ. MGR.: DATE | PROJ. NO.: 120-4113

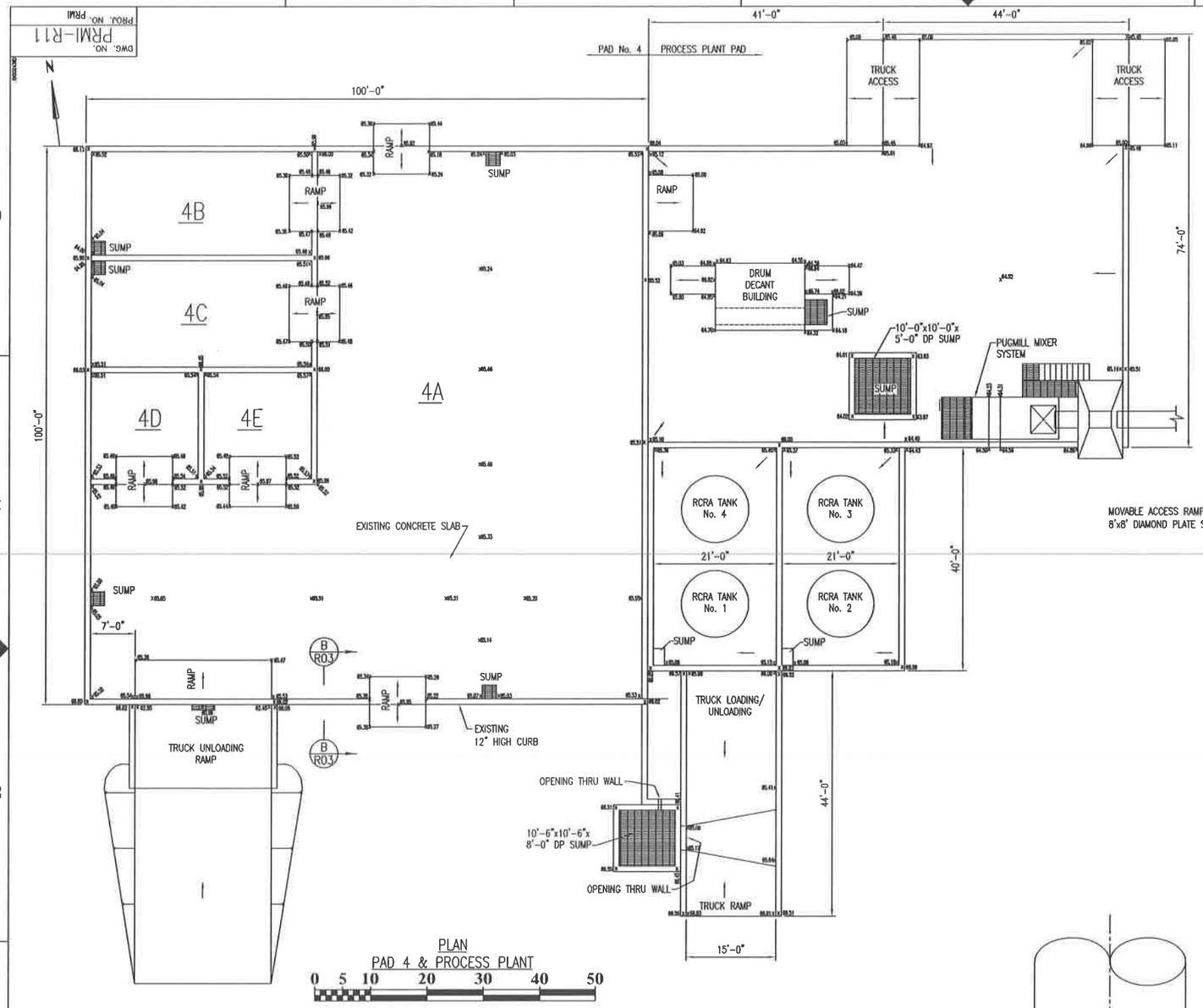

PLAN
PAD 4 & PROCESS PLANT

0 5 10 20 30 40 50

SCALE: IN FEET

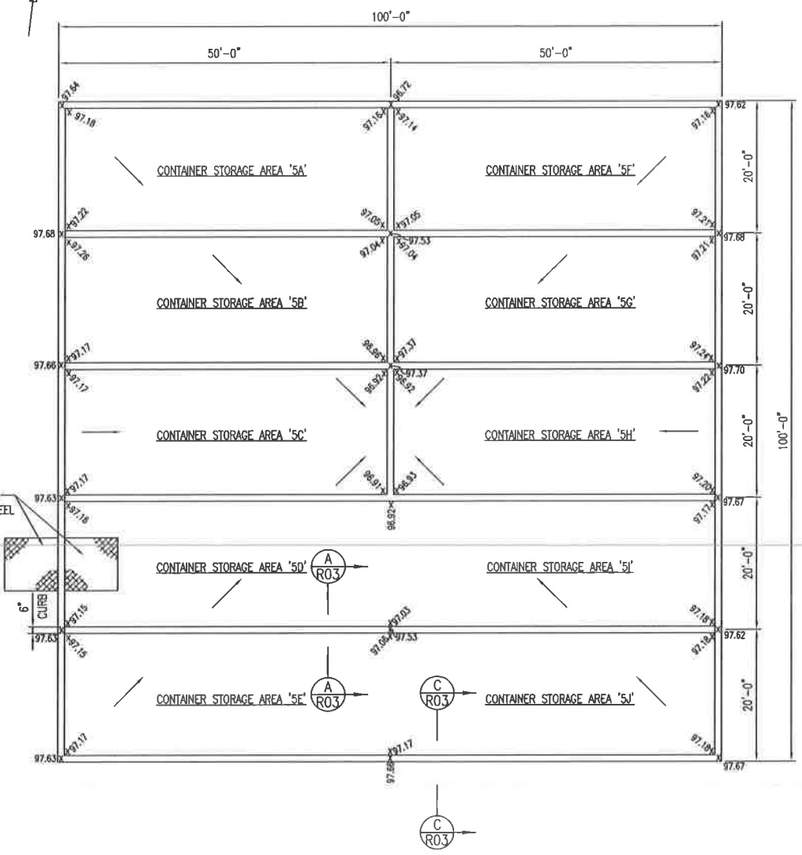

PLAN – PAD 5

0 5 10 20 30 40 50

SCALE: IN FEET

NOTE:
ALL ELEVATIONS ADD 2500 FEET

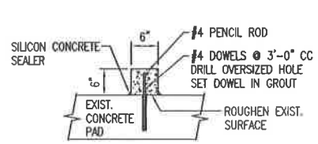

SECTION A–A
SCALE: NTS

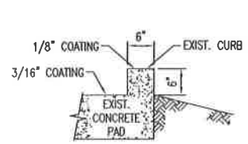

SECTION B–B
SCALE: NTS

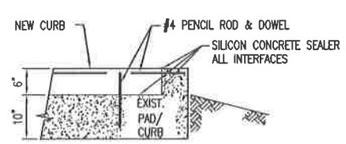

SECTION C–C
SCALE: NTS

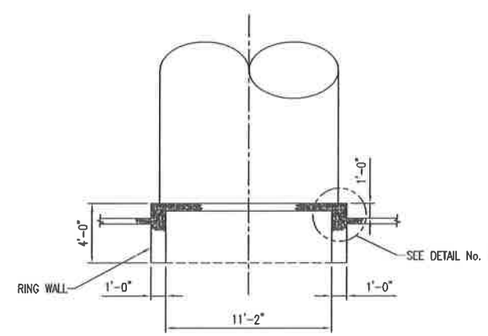

TYPICAL TANK FOUNDATION
SCALE: NTS

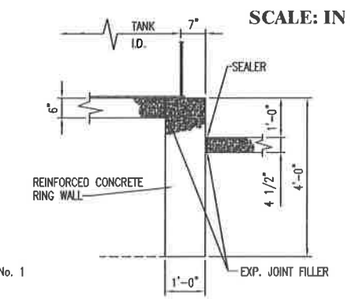

DETAIL No 1
SCALE: NTS

REV.	BY / DATE	CHK'D / DATE	DESCRIPTION	PROJ ENGR / DATE	SUPV ENGR / DATE
B	RJH / 4/8/03	- / -	2003 PERMIT RENEWAL	- / -	JH / 4/8/03
A	DIH / 1/28/98	- / -	ISSUED FOR B PERMIT RENEWAL APPLICATION	- / -	- / -

USEcology Idaho
an American Ecology company

SITE B
GRAND VIEW, IDAHO
US EPA ID NO. IDD 073 114 654

TITLE: TYPICAL GENERAL ARRANGEMENT CONTAINER STORAGE AREAS PAD NOS. 4 & 5, AND PLANT PAD

DRAWN BY: JZ DATE 12/16/97	SCALE:	FILE CODE PRMR11B	REV. NO.
CHECKED DATE	ENGINEER DATE	DWG. NO. PRMI–R11	B
PROJ. MGR. DATE	APPROVED DATE	PROJ. NO. PRMI	

DWG. NO. PRMI–R11
PROJ. NO. PRMI

US Ecology Process Treatment Bins

Drawing Number	Drawing Title	Application Section Reference
Sheet 1 of 4	General Notes	General Information
Sheet 2 of 4	Plan and Elevations	General Information
Sheet 3 of 4	Leak Detection Retainment Pan	General Information
Sheet 4 of 4	Sections and Details	General Information

US ECOLOGY PROCESS TREATMENT BIN

GRAND VIEW, IDAHO

2006

DESIGN CRITERIA:

CODES: 2003 INTERNATIONAL BUILDING CODE
SNOW, WIND, SEISMIC LOAD: NONE

DESIGN LOADING:

1. THE MATERIAL LOAD IS 110 PCF WITH THE LATERAL LOAD ON THE BIN WALLS DETERMINED AS IF THE MATERIAL BEHAVES LIKE A FLUID.
2. THE BIN HAS BEEN DESIGNED TO SUPPORT A 6' DEPTH OF MATERIAL WITH NO SHOVEL LOAD.
3. WITH A MATERIAL DEPTH OF 3', THE MAXIMUM DESIGN FORCE TO BE EXERTED ON THE BIN IN EITHER THE HORIZONTAL OR DOWNWARD DIRECTION BY THE SHOVEL IS 9000 POUNDS. THIS LOAD IS TO ACT ON A 1" x 36" STRIP. THE LOAD IS NOT TO BE APPLIED TO THE BIN SIDEWALLS ANY HIGHER ABOVE THE BOTTOM OF THE BIN THAN 3'. ONLY THE DESIGNATED SIDE MAY HAVE A SHOVEL LOAD. THE END WALLS ARE NOT DESIGNED FOR A SHOVEL LOAD.
4. MAXIMUM THEORETICAL DEFLECTION OF THE PLATE IS TO BE 0.5"

GENERAL NOTES:

1. USE PROPERLY DESIGNED SHORING, BRACING, UNDERPINNING, ETC. AS NECESSITATED BY CONDITIONS OR AS REQUIRED. IT IS THE CONTRACTOR'S SOLE RESPONSIBILITY TO DETERMINE ERECTION PROCEDURE AND SEQUENCE TO ENSURE THE SAFETY OF THE STRUCTURE AND IT'S COMPONENT PARTS DURING ERECTION.
2. NO FIELD REVISIONS TO ANY STRUCTURAL COMPONENTS SHALL BE MADE WITHOUT PRIOR APPROVAL BY THE ENGINEER. THIS INCLUDES (BUT IS NOT LIMITED TO) REVISIONS DUE TO MISLOCATION, MISFIT OR ANY OTHER CONSTRUCTION ERRORS.
3. NO OPENING SHALL BE PLACED IN ANY STRUCTURAL MEMBER (OTHER THAN AS INDICATED ON APPROVED SHOP DRAWINGS) UNTIL THE LOCATION HAS BEEN APPROVED BY THE STRUCTURAL ENGINEER.
4. WRITTEN DIMENSIONS HAVE PRECEDENCE OVER SCALED DIMENSIONS.

MATERIALS:

A. SPECIFICATIONS: AISC ASD 9TH ED, AWS D1.1 & D1.6

B. MATERIALS:
BIN LINER: T1 UNLESS NOTED OTHERWISE
WIDE FLANGE: A992
STEEL TUBES: A-500B (Fy=46 ksi)
CLIP ANGLES AND GUSSET PLATES: A36 UNLESS OTHERWISE NOTED
WELD: E70-XX ELECTRODES

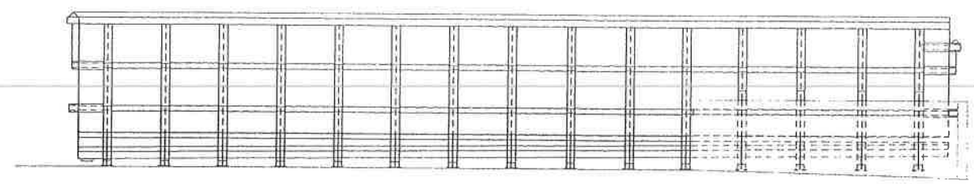

SHEET LEGEND

Sheet No.	Rev.	DESCRIPTION
1	0	GENERAL NOTES
2	0	PLAN AND ELEVATIONS
3	0	LEAK DETECTION RETAINMENT PAN
4	0	SECTIONS AND DETAILS

PROFESSIONAL ENGINEER REGISTERED #9395 3/14/06 STATE OF IDAHO JOHN R. CHURCH

LEAVITT & ASSOCIATES ENGINEERS, INC.
STRUCTURAL • CIVIL
SURVEYING

GENERAL NOTES

RULE STEEL
06112.007
treatmentbin.dwg
J.R.C. K.G.H. M.C.B. 09/12/2006

RULE STEEL TANKS, INC.
21965 Middleton Rd.
Caldwell, Idaho 83605
(208) 343-3311
(208) 343-2066
(800) 793-5536

No.	DATE	BY	DESCRIPTION
1	3/23/07	KGH	REVISED TO INCREASE DESIGN FILL DEPTH
0	11/27/06	KGH	ISSUED FOR APPROVAL

REVISIONS

SCALE: AS NOTED

Sheet Number: 1 of 4

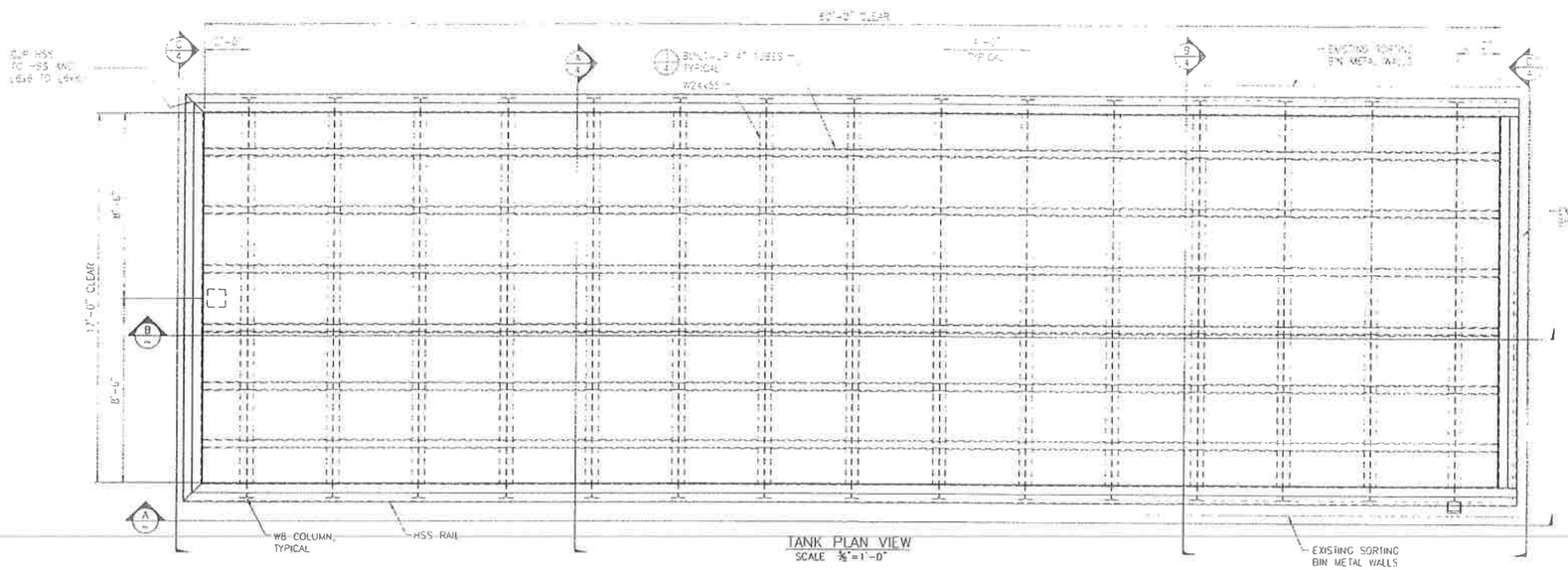

TANK PLAN VIEW
SCALE 3/8"=1'-0"

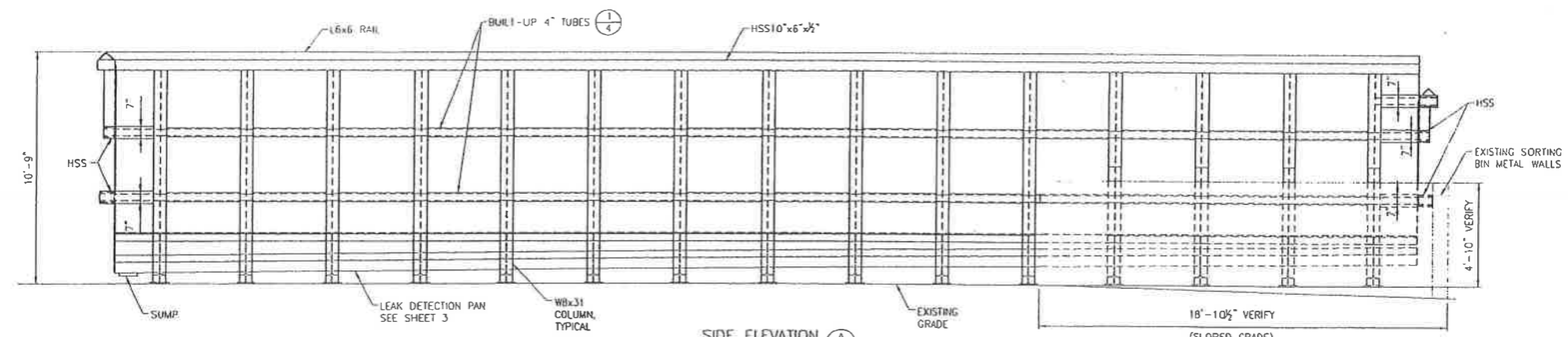

SIDE ELEVATION (A)
SCALE 3/8"=1'-0"

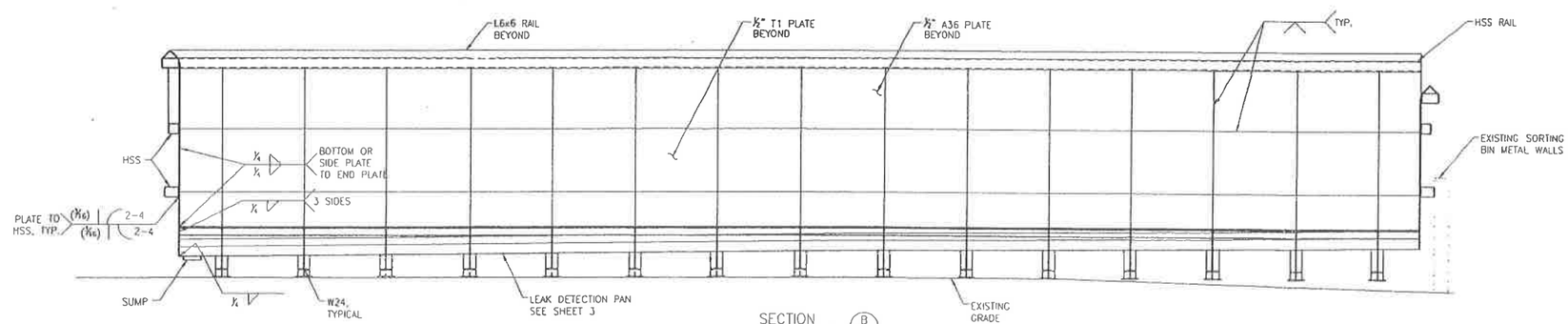

SECTION (B)
SCALE 3/8"=1'-0"

PROFESSIONAL ENGINEER REGISTERED 9395 STATE OF IDAHO JAMY R. CHURCH

LEAVITT & ASSOCIATES ENGINEERS, INC.
STRUCTURAL • CIVIL
SURVEYING

PLAN AND ELEVATIONS

RULE STEEL TANKS, INC.
21166 Hatchery Rd.
Caldwell, Idaho 83605
Tel: (208) 365-3231
(800) 767-7836
Fax: (208) 765-5636

Client:	RULE STEEL
Job No.:	06112.007
Drawn:	J.R.C.
Checked:	K.G.H.
Scale:	tr-assimentbin.dwg
Reviewed:	M.C.B.
Date:	08/15/2008

REVISIONS

No.	DATE	BY	DESCRIPTION
1	3/23/07	KGH	REVISED TO INCREASE DESIGN FILL DEPTH
0	11/27/06	KGH	ISSUED FOR APPROVAL

SCALE: 3/8"=1'-0"
Sheet Number: 2 of 4

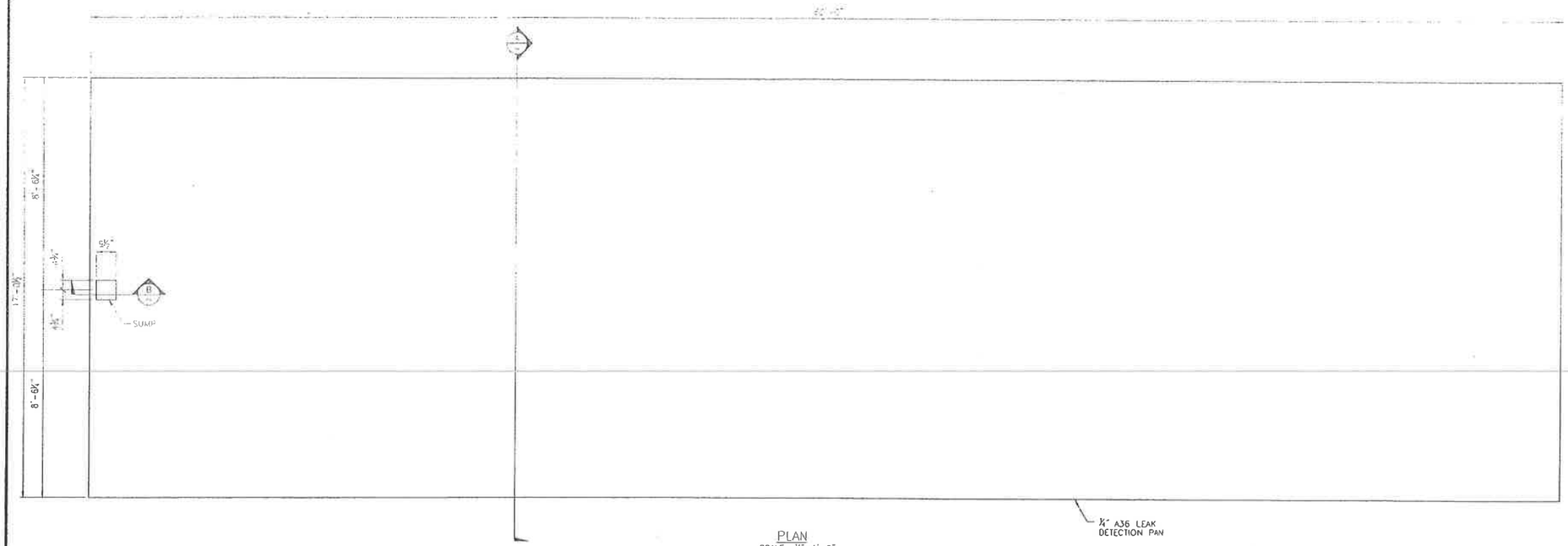

PLAN
SCALE ½"=1'-0"

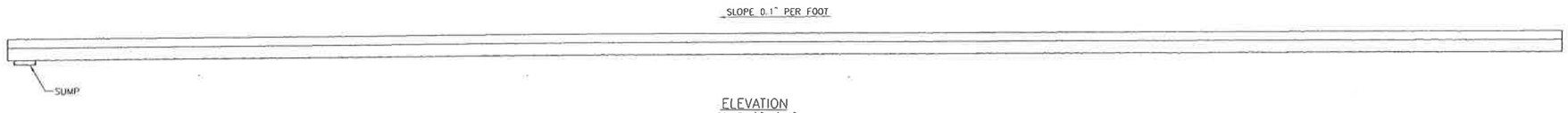

ELEVATION
SCALE ½"=1'-0"

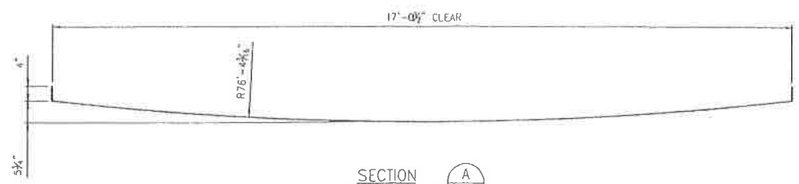

SECTION A
SCALE ¼"=1'-0"

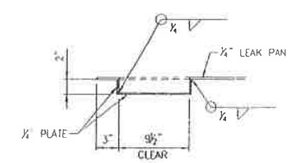

SECTION B
SCALE 1½"=1'-0"

TYPICAL PAN PLATE CONNECTION DETAIL
NTS

PROFESSIONAL ENGINEER REGISTERED 9395 STATE OF IDAHO JONAT R. CHAPMAN

LEAVITT & ASSOCIATES ENGINEERS, INC.
STRUCTURAL • CIVIL
SURVEYING

LEAK DETECTION RETAINMENT PAN

Name:	RULE STEEL
Job Number:	06113.002
Drawing No:	Leakdetectdtln.dwg
Drawn By:	J.R.C.
Checked By:	K.G.H.
Date:	M.C.B.
Date:	09/10/2008

RULE STEEL TANKS, INC.
7 Mile Venture Rd.
Caldwell, Idaho 83605
Tel: (208) 585-3031 (208) 585-3034 (800) 781-5434

REVISIONS			
No.	DATE	BY	DESCRIPTION
1	3/22/07	KGH	REVISED TO INCREASE DESIGN FILL DEPTH
0	11/27/06	KGH	ISSUED FOR APPROVAL

SCALE: AS NOTED
Sheet Number: 3 of 4

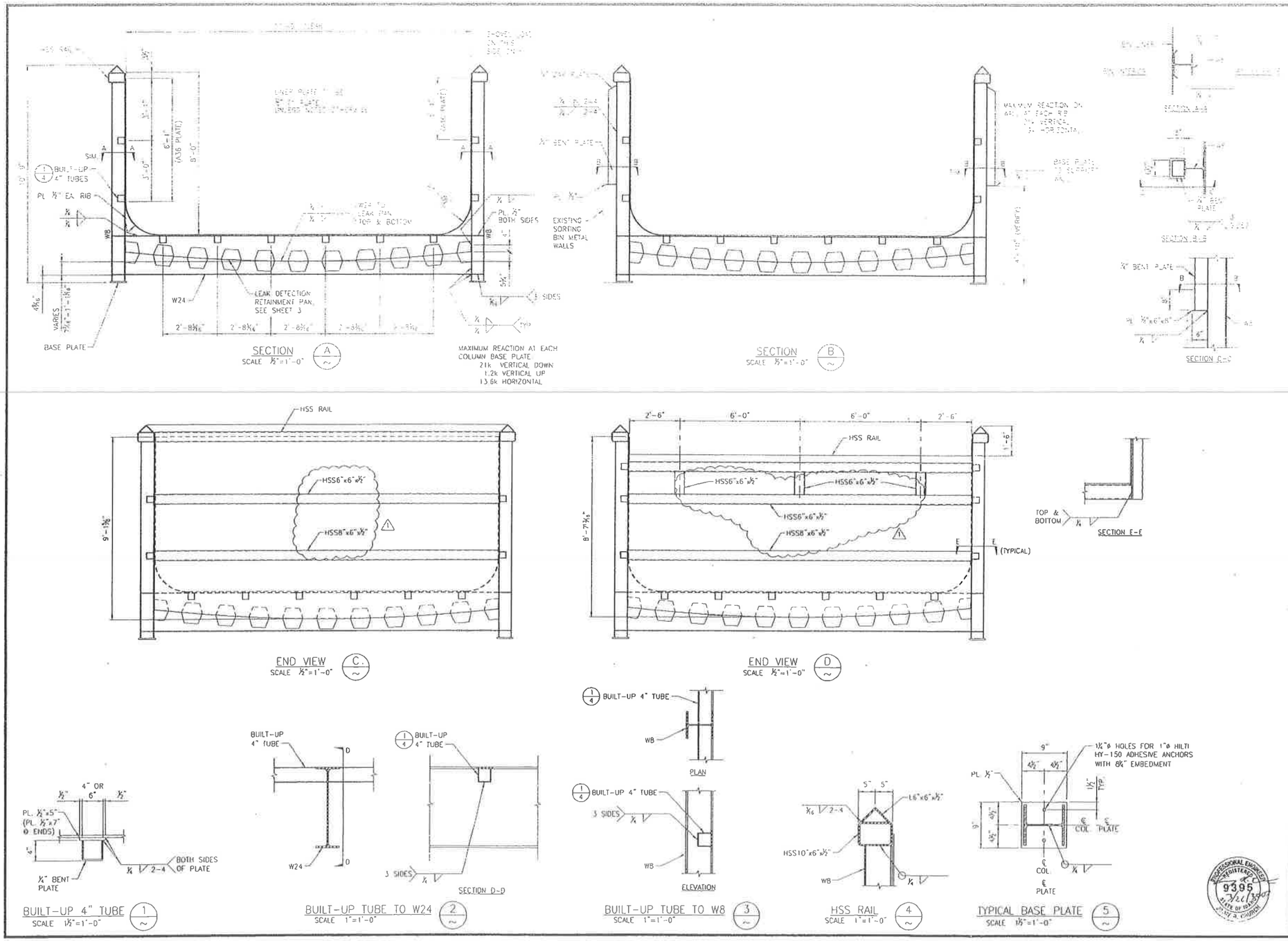

LEAVITT & ASSOCIATES ENGINEERS, INC.
STRUCTURAL • CIVIL
SURVEYING

SECTIONS AND DETAILS

RULE STEEL
09112.007
J.R.C.
K.G.H.
M.C.B.
08/15/2008

RULE STEEL TANKS, INC.
21856 Victorian Rd.
Caldwell, Idaho 83605
(208) 585-3011
(208) 585-3036
(800) 789-5836

No.	DATE	BY	DESCRIPTION
1	3/23/07	KGH	REVISED TO INCREASE DESIGN FILL DEPTH
0	11/27/06	KGH	ISSUED FOR APPROVAL

REVISIONS

SCALE: AS NOTED

Sheet Number: 4 of 4

Landfills

Drawing Number	Drawing Title	May 2014 USEI Permit Application Section Reference
PRMI-L01	Civil - Trenches 10 and 11 Typical Site Plan	D, I
PRMI-L02	Civil - Trenches 10 and 12 Typical Subgrade Plan	D, I
PRMI-L03	Civil - Trenches 10 and 11 Typical Final Grading Plan	D, I
PRMI-L04	Civil - Trenches 10 and 11 Cap System Sections and Details Typical Final Closure	D, I
PRMI-L05	Civil - Trechnes 10 and 11 Typical Final Closure Cap System Sections and Details	I
PRMI-L06	Civil - ET Cap Test Pad Typical Plan, Section, and Detail	I
PRMI-L11	Facility - Cell 5 Typical Site Plan	D, I, M
PRMI-L12	Civil - Cell 5 Typical Primary Liner Plan	D, I, M
PRMI-L13	Civil - Cell 5 Typical Subgrade Plan at Closure	D, I, M
PRMI-L14	Civil - Cell 5 Typical Final Grading Plan	D, I, M
PRMI-L15	Civil - Cell 5 - Phase 1 Typical Sections and Details	D, I, M
PRMI-L16	Civil - Phase 1 Typical Sections and Details	D, I, M
PRMI-L17	Civil - Cell 5 - Phase II Typical Sections and Details	D, I, M
PRMI-L18	Civil - Cell 5 - Phase II Typical Sections and Details	D, I, M
PRMI-L19	Civil - Cell 5 Final Closure Typical Cap System Sections and Details	D, I
PRMI-L21	Civil - Cell 14 Typical Site Plan	D, I, M
PRMI-L22	Civil - Cell 14 Typical Secondary Liner Plan	D, I, M
Sheet 5 of 9	Civil - Cell 14 - Final Closure Typical Final Cover Sections and Details	I
PRMI-L23	Civil - Cell 14 Typical Final Grading Plan - (REPLACED Sheet 8 of 9)	D, I, M
PRMI-L24	Civil - Phase 1 Typical Sections and Details	D, I, M
PRMI-L25	Civil - Cell 14 - Phase 2 Typical Sections and Details	D, I, M
PRMI-L26	Civil - Phase 2 Typical Sections and Details	D, I, M
PRMI-L27	Civil - Cell 14 - Phase 2 Typical Sections and Details	D, I, M
52-00-00	Cell 15 - Grand View Facility	D
52-01-01	Cell 15 - Site Plan/Cell Layout	D
52-01-02	Cell 15 - Cell Construction Phasing and Waste Limits	D
52-01-03	Cell 15 - Sections and Details Sheet 1	D
52-01-04	Cell 15 - Sections and Details Sheet 2	D
52-01-05	Cell 15 - Sections and Details Sheet 3	D
Sheet 5 of 8	Civil Cell 15 Final Closure Final Cover Grading Plan	General Information
Sheet 6 of 8	Civil Cell 15 Final Closure Typical Cross Sections	General Information
Sheet 7 of 8	Civil Cell 15 Final Closure Typical Final Cover Section and Details	General Information
52-01-06	Cell 15 - Final Cover Grading Plan	General Information
52-01-07	Cell 15 - Final Cover Sections and Details 1	General Information
52-01-08	Cell 15 - Final Cover Sections and Details 2	General Information
15-08-00	Cell 15 Modification - Cover Sheet	General Information
15-08-01	Cell 15 Modification - Phase IV Layout / Plan View	General Information
15-08-02	Cell 15 Modification - Cell Liner Sections	General Information
15-08-03	Cell 15 Modification - Interim Waste Placement	General Information
15-08-04	Cell 15 Modification - Final Waste Placement	General Information
15-08-05	Cell 15 Modification - Final Cover Grading Plan	General Information
15-08-06	Cell 15 Modification - Sumps and Risers Sections and Details	General Information

Landfills (continued)

Drawing Number	Drawing Title	May 2014 USEI Permit Application Section Reference
15-08-07	Cell 15 Modification - Leachate Pipe Sections and Details	General Information
16-11-00	Cell 16 Drawing Index and Cover Sheet	D
16-11-01	Cell 16 Cell Liner Layout Plan View 1	D
16-11-02	Cell 16 Cell Liner Layout Plan View 2	D
16-11-03	Cell 16 Liner Sections and Details	D
16-11-04	Cell 16 construction Phasing and Waste Placement	D, M
16-11-05	Cell 16 Interim Storm Water Control Details	D
16-11-06	Cell 16 Sumps and Risers Sections and Details	D
16-11-07	Cell 16 Leachate Pipe Sections and Details	D
16-11-08	Cell 16 Waste Placement Sections and Details	D, I
Sheet 5 of 9	Cell 16 Final Closure Final Cover Grading Plan North	I
Sheet 6 of 9	Cell 16 Final Closure Final Cover Grading Plan South	I
Sheet 7 of 9	Cell 16 Final Closure Typical Cross Sections	General Information
Sheet 8 of 9	Cell 16 Final Closure Typical Final Cover Sections and Details – 1	General Information
Sheet 9 of 9	Cell 16 Final Closure Typical Final Cover Sections and Details – 2	General Information
PRMI-L28	Civil - Cell 14 - Final Closure Typical Cap System Section and Details (Referenced in Attachment 9c)	D, I, M
Sheet 8 of 9	Civil - Cell 14 Final Closure - Typical Final Cover Section and Details	General Information
PRMI-L29	Civil - Cell 14 - Final Closure typ Cap Drainage Sections and Details	D, I, M
PRMI-R15	General Facility Container Storage Area 1 Typical Container Layout & Regrading Plan	C, D, I
PRMI-R21	General Arrangement - RCRA/PCB Storage BLDG, and PCB Storage Tank Facility	C, D, I
PRMI-R22	General Arrangement - RCRA/PCB Staorage BLDG & PCB Processing BLDG, and PCB Storage Tank Facility - Sections	C, D, I

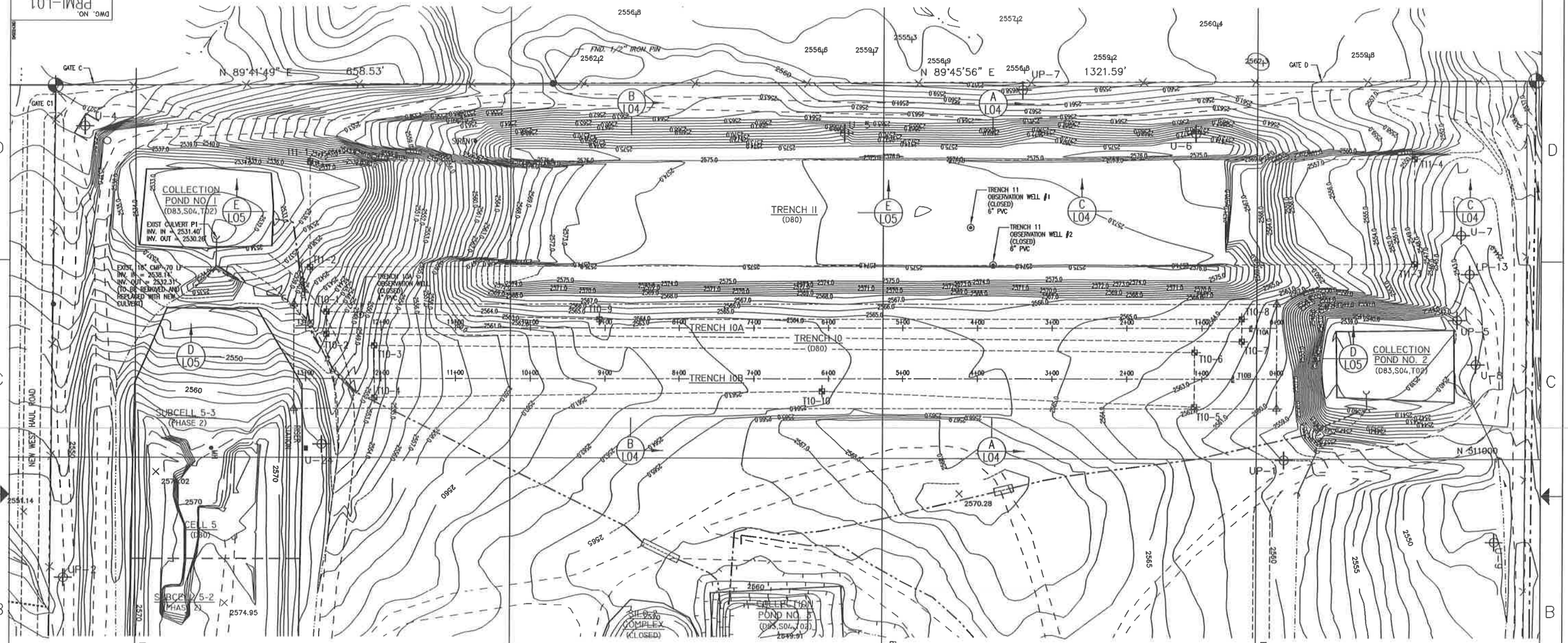

EXISTING CONDITIONS PRIOR TO CLOSURE OF TRENCHES 10 AND 11

LEGEND

- 5/8" IRON PIN W/ ALUMINUM CAP
- POWER POLE
- 2544.70 SPOT ELEVATION
- U-14 WELL
- EXISTING FENCE LINE
- PROPERTY BOUNDARY
- EXISTING UNIMPROVED ROAD
- EXISTING PAVED ROAD
- 2550 EXISTING TOPOGRAPHY AS OF NOV. 4, 1995
- RCRA UNIT BOUNDARY

LEGEND (CONT.)

- EXISTING CULVERT
- EXISTING DRAINAGE CHANNEL
- CARRIER PIPE
- POND WATER TRANSFER PIPE
- 34 FACILITY KEY NUMBER
- (D83,S04,T02) RCRA PROCESS CODE
- T10-4 STAKE MARKER AND ID NO.
- RESTRICTED AREA BOUNDARY
- NEW CULVERT PIPING

GENERAL NOTES:

1. EXISTING SITE TOPOGRAPHY, PHYSICAL FEATURES AND DELINEATIONS OBTAINED FROM AERIAL PHOTOGRAPHY AND SURVEYED DATUM PROVIDED TO ENVIROSOURCE TECHNOLOGIES BY: J.J. HOWARD ENGINEERING-SURVEYING; 1675-A HILL ROAD; BOISE, IDAHO 83702. DATE OF ORIGINAL SURVEY - NOVEMBER 4, 1995.
2. ADDITIONALLY THE FOLLOWING AREAS OF THE SITE HAVE BEEN UPDATED AND INCORPORATED INTO THE EXISTING SITE PLAN AS FOLLOWS:
   - A. THE CURRENT TOP OF WASTE ELEVATIONS FOR CELL 5 AS OF JANUARY 2, 1996. SURVEY BY: J.J. HOWARD.
   - B. THE CURRENT TOP OF WASTE ELEVATIONS FOR CELL 14 AS OF JANUARY 4, 2000. SURVEY BY: J.J. HOWARD.
   - C. UPDATE OF THE AS-BUILT SURFACE TOPOGRAPHY OF CONTAINER STORAGE AREA NO. 1 JUNE 16, 1999. SURVEY BY: J.J. HOWARD.
   - D. STABILIZATION AND CONTAINMENT BUILDING UPDATED AS OF JANUARY 14, 1997. SURVEY BY: J.J. HOWARD. DESIGN CONTOURS BY: ENVIROSOURCE TECHNOLOGIES.
   - E. PAD 4 PROCESS PLANT AREA UPDATED AS OF APRIL 15, 1998. SURVEY BY: J.J. HOWARD.
   - F. TRENCH 10 AND 11 AREA AND CELL 14 SIDEWALL AREA UPDATED AS OF MARCH 2000. SURVEY BY: J.J. HOWARD.
3. AN ADDITIONAL 1,000 FEET TO THE NORTH OF SECTION 19 HAS BEEN SURVEYED AND INCORPORATED INTO THE EXISTING TOPOGRAPHY. SURVEY BY: J.J. HOWARD DATED FEBRUARY 20, 1998.

TRENCHES 10 AND 11 STAKE COORDINATES

REFERENCE POINT	LOCATION	NORTHING	EASTING
T10-1	NW CORNER T10A	511,196	362,254
T10-2	SW CORNER T10A	511,166	362,254
T10-3	NW CORNER T10B	511,151	362,318
T10-4	SW CORNER T10B	511,081	362,318
T10-5	SE CORNER T10B	511,070	363,417
T10-6	NE CORNER T10B	511,143	363,417
T10-7	SE CORNER T10A	511,158	363,480
T10-8	NE CORNER T10A	511,188	363,480
T10-9	BREAKPOINT NORTH SIDE T10A	511,186	362,619
T10-10	BREAKPOINT SOUTH SIDE T10B	511,090	362,918
T11-1	NW CORNER T11	511,397	362,232
T11-2	SW CORNER T11	511,256	362,232
T11-3	SE CORNER T11	511,262	363,710
T11-4	NE CORNER T11	511,403	363,710

NOTE: MONUMENTS SET NOVEMBER 6, 2000 BY J.J. HOWARD.

N 21.0° MAGNETIC NORTH

60' 40' 20' 0' 60' 120'

PROFESSIONAL ENGINEER LAND SURVEYOR REGISTERED 2471 STATE OF IDAHO JAMES J. HOWARD

REV.	BY / DATE	CHK'D / DATE	DESCRIPTION	PROJ ENGR / DATE	SURV ENGR / DATE
F	RJM / 4/23/03	- / -	CLASS 3 PERMIT MODIFICATION	- / -	JH / 4/23/03
E	MK / 4/2/01	- / -	ISSUED IN RESPONSE TO NOD LETTER DATED JUNE 30, 1999	- / -	MRS / 4/2/01
D	MK / 1/10/01	- / -	AS-BUILT. SUBMITTED WITH CQA REPORT AND CONSTRUCTION CERTIFICATION	- / -	- / -
C	MK / 4/15/99	- / -	ISSUED IN RESPONSE TO N.O.D. LETTER DATED 4/5/99	- / -	- / -
B	MK / 1/13/99	- / -	ISSUED FOR JANUARY 1999 CLASS 3 PERMIT MODIFICATION	- / -	- / -
A	MK / 7/28/98	- / -	ISSUED FOR PART B PERMIT RENEWAL APPLICATION	- / -	- / -

USEcology Idaho
an American Ecology company

SITE B
GRAND VIEW, IDAHO
US EPA ID NO. IDD 073 114 654

TYPICAL

TITLE: CIVIL
TRENCHES 10 AND 11
TYPICAL SITE PLAN

DRAWN BY: MK DATE 6/4/98	SCALE:	FILE CODE PRMIL01F	REV. NO.
CHECKED DATE	ENGINEER DATE	DWG. NO. PRMI-L01	F
PROJ. MGR. DATE	APPROVED DATE	PROJ. NO. PRMI	

DWG. NO. PRMI-L01
PROJ. NO. PRMI

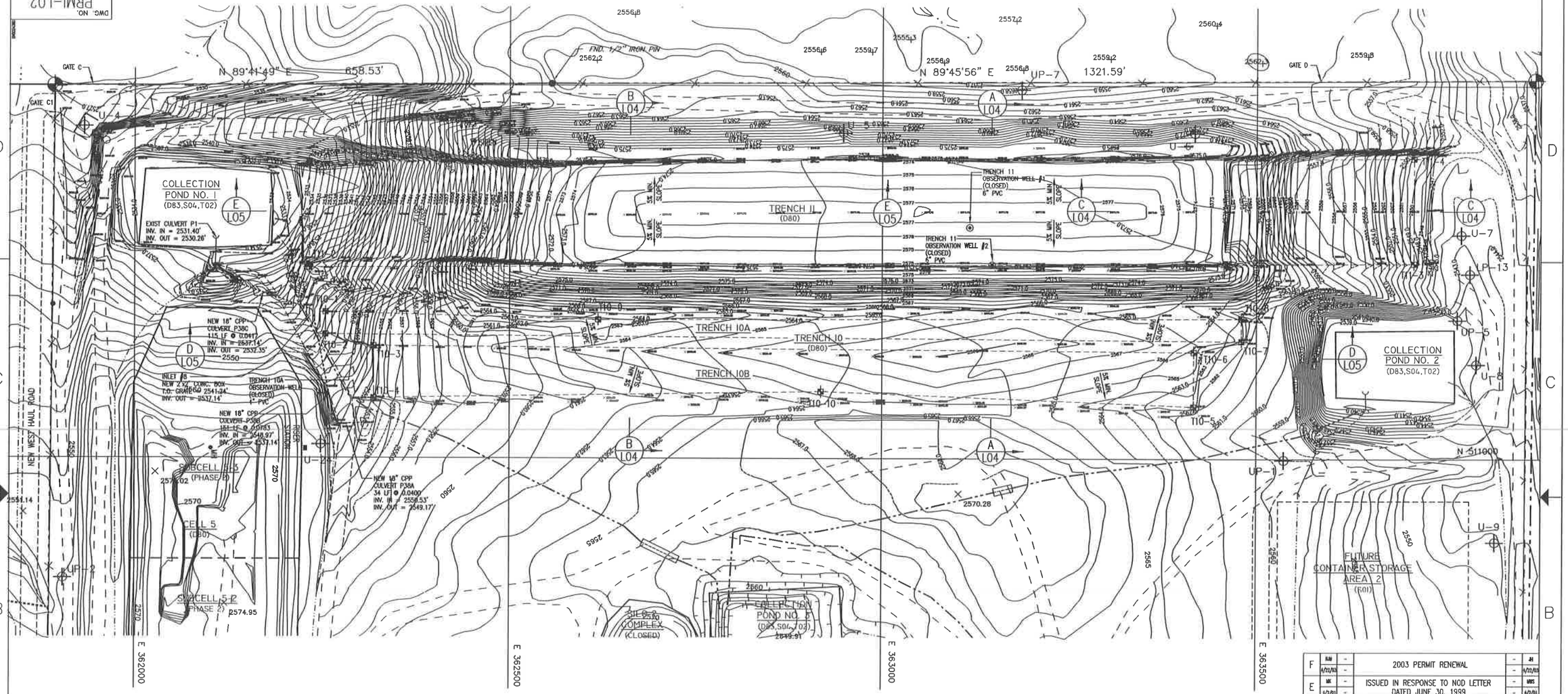

LEGEND

- 5/8" IRON PIN W/ ALUMINUM CAP
- POWER POLE
- 2544.70 — SPOT ELEVATION
- U-14 — WELL
- EXISTING FENCE LINE
- PROPERTY BOUNDARY
- EXISTING UNIMPROVED ROAD
- EXISTING PAVED ROAD
- 2550 — EXISTING TOPOGRAPHY AS OF NOV. 4, 1995
- RCRA UNIT BOUNDARY
- LIMITS OF CELL

LEGEND (CONT.)

- EXISTING CULVERT
- EXISTING DRAINAGE CHANNEL
- CARRIER PIPE
- POND WATER TRANSFER PIPE
- 34 — FACILITY KEY NUMBER
- (D83,S04,T02) — RCRA PROCESS CODE
- NEW CULVERT PIPING
- NEW CATCH BASIN
- 2550 — AS-BUILT SUBGRADE CONTOURS

GENERAL NOTES:

1. EXISTING SITE TOPOGRAPHY, PHYSICAL FEATURES AND DELINEATIONS OBTAINED FROM AERIAL PHOTOGRAPHY AND SURVEYED DATUM PROVIDED TO ENVIROSOURCE TECHNOLOGIES BY: J.J. HOWARD ENGINEERING-SURVEYING; 1675-A HILL ROAD; BOISE, IDAHO 83702. DATE OF ORIGINAL SURVEY – NOVEMBER 4, 1995.
2. ADDITIONALLY THE FOLLOWING AREAS OF THE SITE HAVE BEEN UPDATED AND INCORPORATED INTO THE EXISTING SITE PLAN AS FOLLOWS:
   - A. THE CURRENT TOP OF WASTE ELEVATIONS FOR CELL 5 AS OF JANUARY 2, 1996. SURVEY BY: J.J. HOWARD.
   - B. THE CURRENT TOP OF WASTE ELEVATIONS FOR CELL 14 AS OF JANUARY 4, 2000. SURVEY BY: J.J. HOWARD.
   - C. UPDATE OF THE AS-BUILT SURFACE TOPOGRAPHY OF CONTAINER STORAGE AREA NO. 1 JUNE 16, 1999. SURVEY BY: J.J. HOWARD.
   - D. STABILIZATION AND CONTAINMENT BUILDING UPDATED AS OF JANUARY 14, 1997. SURVEY BY: J.J. HOWARD. DESIGN CONTOURS BY: ENVIROSOURCE TECHNOLOGIES.
   - E. PAD 4 PROCESS PLANT AREA UPDATED AS OF APRIL 15, 1998. SURVEY BY: J.J. HOWARD.
   - F. TRENCH 10 AND 11 AREA AND CELL 14 SIDEWALL AREA UPDATED AS OF MARCH 2000. SURVEY BY: J.J. HOWARD.
3. AN ADDITIONAL 1,000 FEET TO THE NORTH OF SECTION 19 HAS BEEN SURVEYED AND INCORPORATED INTO THE EXISTING TOPOGRAPHY. SURVEY BY: J.J. HOWARD DATED FEBRUARY 20, 1998.
4. AS-BUILT SUBGRADE SURVEY BY: J.J. HOWARD DATED JULY 06, 2000.

REV.	BY / DATE	CHK'D / DATE	DESCRIPTION	PROJ. ENGR. / DATE	SUPV. ENGR. / DATE
F	RJM / 4/22/03	- / -	2003 PERMIT RENEWAL	- / -	JH / 4/22/03
E	MK / 6/2/01	- / -	ISSUED IN RESPONSE TO NOD LETTER DATED JUNE 30, 1999	- / -	MRS / 6/2/01
D	MK / 1/10/01	- / -	AS-BUILT. SUBMITTED WITH CQA REPORT AND CONSTRUCTION CERTIFICATION	- / -	- / -
C	MK / 6/15/99	- / -	ISSUED IN RESPONSE TO N.O.D. LETTER DATED 4/5/99	- / -	- / -
B	MK / 1/15/99	- / -	ISSUED FOR JANUARY 1999 CLASS 3 PERMIT MODIFICATION	- / -	- / -
A	MK / 7/28/98	- / -	ISSUED FOR PART B PERMIT RENEWAL APPLICATION	- / -	- / -

USEcology Idaho
an American Ecology company

SITE B
GRAND VIEW, IDAHO
US EPA ID NO. IDD 073 114 654

TYPICAL

N 21.0° MAGNETIC NORTH

1"=60' 60' 40' 20' 0' 60' 120'

PROFESSIONAL ENGINEER LAND SURVEYOR REGISTERED 2471 STATE OF IDAHO JAMES J. HOWARD

TITLE: CIVIL
TRENCHES 10 AND 11
TYPICAL SUBGRADE PLAN

DRAWN BY: MK DATE 6/4/98	SCALE:	FILE CODE PRMIL02F	REV. NO. F
CHECKED DATE	ENGINEER DATE	DWG. NO. PRMI-L02	
PROJ. MGR. DATE	APPROVED DATE	PROJ. NO. PRMI	

DWG. NO. PRMI-L02
PROJ. NO. PRMI

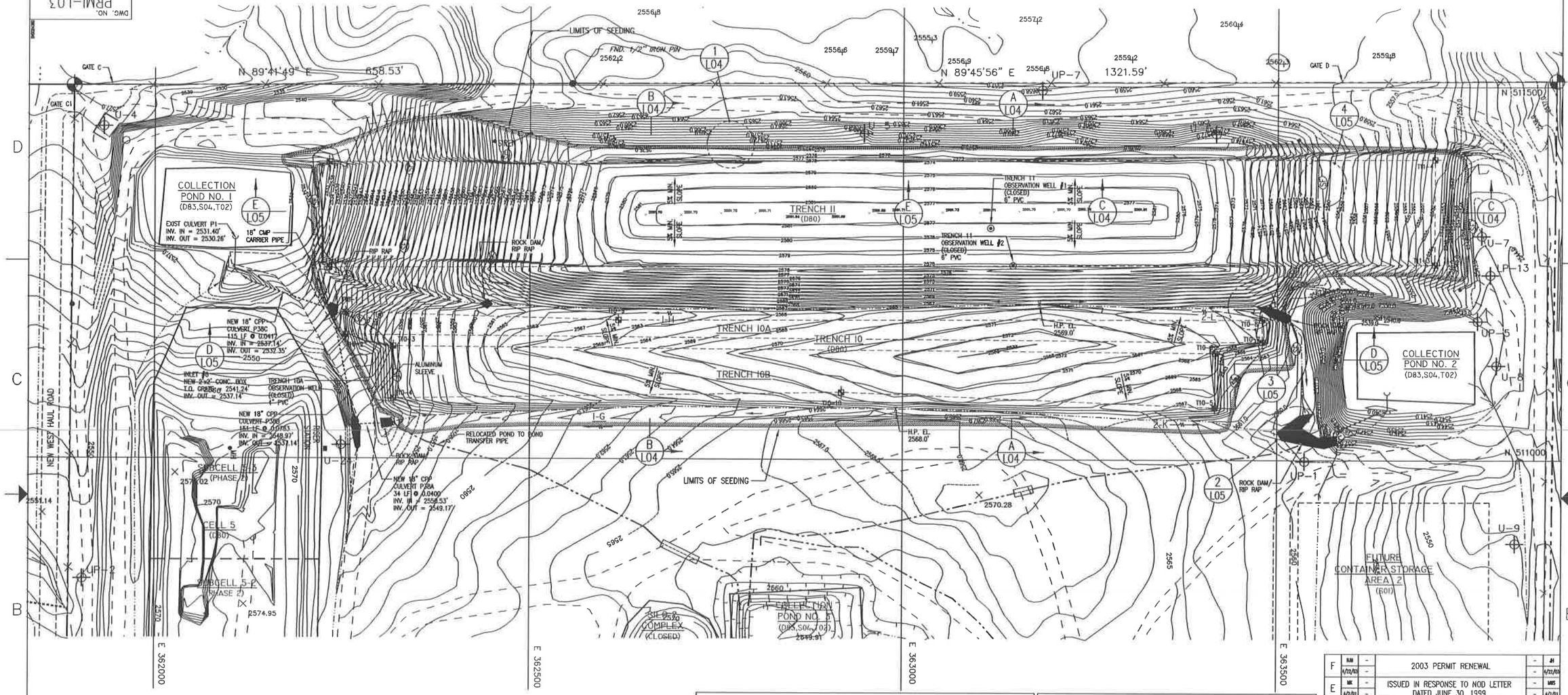

LEGEND

- 5/8" IRON PIN W/ ALUMINUM CAP
- POWER POLE
- 2544.70 SPOT ELEVATION
- U-14 WELL
- EXISTING FENCE LINE
- PROPERTY BOUNDARY
- EXISTING UNIMPROVED ROAD
- EXISTING PAVED ROAD
- 2550 EXISTING TOPOGRAPHY AS OF NOV. 4, 1995
- RCRA UNIT BOUNDARY
- EXISTING CULVERT
- EXISTING DRAINAGE CHANNEL
- CARRIER PIPE

LEGEND (CONT.)

- POND WATER TRANSFER PIPE
- 34 FACILITY KEY NUMBER
- (D83,S04,T02) RCRA PROCESS CODE
- T10-4 STAKE MARKER AND ID NO. (PERMANENT MONUMENT)
- NEW CATCH BASIN
- NEW CULVERT PIPING
- ROCK FILTER DAM/ RIP RAP
- 2550 AS-BUILT FINAL CONTOURS
- LIMITS OF SEEDING
- SF INSTALLED SILT FENCE

GENERAL NOTES:

1. EXISTING SITE TOPOGRAPHY, PHYSICAL FEATURES AND DELINEATIONS OBTAINED FROM AERIAL PHOTOGRAPHY AND SURVEYED DATUM PROVIDED TO ENVIROSOURCE TECHNOLOGIES BY: J.J. HOWARD ENGINEERING-SURVEYING; 1675-A HILL ROAD; BOISE, IDAHO 83702. DATE OF ORIGINAL SURVEY – NOVEMBER 4, 1995.
2. ADDITIONALLY THE FOLLOWING AREAS OF THE SITE HAVE BEEN UPDATED AND INCORPORATED INTO THE EXISTING SITE PLAN AS FOLLOWS:
   - A. THE CURRENT TOP OF WASTE ELEVATIONS FOR CELL 5 AS OF JANUARY 2, 1996. SURVEY BY: J.J. HOWARD.
   - B. THE CURRENT TOP OF WASTE ELEVATIONS FOR CELL 14 AS OF JANUARY 4, 2000. SURVEY BY: J.J. HOWARD.
   - C. UPDATE OF THE AS-BUILT SURFACE TOPOGRAPHY OF CONTAINER STORAGE AREA NO. 1 JUNE 16, 1999. SURVEY BY: J.J. HOWARD.
   - D. STABILIZATION AND CONTAINMENT BUILDING UPDATED AS OF JANUARY 14, 1997. SURVEY BY: J.J. HOWARD. DESIGN CONTOURS BY: ENVIROSOURCE TECHNOLOGIES.
   - E. PAD 4 PROCESS PLANT AREA UPDATED AS OF APRIL 15, 1998. SURVEY BY: J.J. HOWARD.
   - F. TRENCH 10 AND 11 AREA AND CELL 14 SIDEWALL AREA UPDATED AS OF MARCH 2000. SURVEY BY: J.J. HOWARD.
3. AN ADDITIONAL 1,000 FEET TO THE NORTH OF SECTION 19 HAS BEEN SURVEYED AND INCORPORATED INTO THE EXISTING TOPOGRAPHY. SURVEY BY: J.J. HOWARD DATED FEBRUARY 20, 1998.
4. AS-BUILT FINAL SURVEY BY: J.J. HOWARD DATED: AUGUST 29, 2000.

TRENCHES 10 AND 11 STAKE COORDINATES

REFERENCE POINT	LOCATION	NORTHING	EASTING
T10-1	NW CORNER T10A	511,196	362,254
T10-2	SW CORNER T10A	511,166	362,254
T10-3	NW CORNER T10B	511,151	362,318
T10-4	SW CORNER T10B	511,081	362,318
T10-5	SE CORNER T10B	511,070	363,417
T10-6	NE CORNER T10B	511,143	363,417
T10-7	SE CORNER T10A	511,158	363,480
T10-8	NE CORNER T10A	511,188	363,480
T10-9	BREAKPOINT NORTH SIDE T10A	511,186	362,619
T10-10	BREAKPOINT SOUTH SIDE T10B	511,090	362,918
T11-1	NW CORNER T11	511,397	362,232
T11-2	SW CORNER T11	511,256	362,232
T11-3	SE CORNER T11	511,262	363,710
T11-4	NE CORNER T11	511,403	363,710

NOTE: MONUMENTS SET NOVEMBER 6, 2000 BY J.J. HOWARD.

OBSERVATION WELLS

WELL ID. POINT	NORTHING	EASTING	CAP ELEV.	DATE CLOSED
TRENCH 10A	511,192	362,299	2549.00	7/14/00
TRENCH 11-#1	511,310	363,117	2577.25	7/14/00
TRENCH 11-#2	511,260	363,147	2574.75	7/14/00

N 21.0° MAGNETIC NORTH

60' 40' 20' 0' 60' 120'
1"=60'

PROFESSIONAL ENGINEER LAND SURVEYOR REGISTERED 2471 STATE OF IDAHO JAMES J. HOWARD

REV.	BY / DATE	CHK'D / DATE	DESCRIPTION	PROJ. ENGR / DATE	SUPV. ENGR / DATE
F	RJM 4/22/03	- -	2003 PERMIT RENEWAL	- -	JH 4/22/03
E	MK 4/2/01	- -	ISSUED IN RESPONSE TO NOD LETTER DATED JUNE 30, 1999	- -	MMS 4/2/01
D	MK 11/12/99	- -	AS-BUILT. SUBMITTED WITH COA REPORT AND CONSTRUCTION CERTIFICATION	- -	- -
C	MK 4/15/99	- -	ISSUED IN RESPONSE TO N.O.D. LETTER DATED 4/5/99	- -	- -
B	MK 1/15/99	- -	ISSUED FOR JANUARY 1999 CLASS 3 PERMIT MODIFICATION	- -	- -
A	MK 7/28/98	- -	ISSUED FOR PART B PERMIT RENEWAL APPLICATION	- -	- -

US Ecology Idaho
an American Ecology company

SITE B
GRAND VIEW, IDAHO
US EPA ID NO. IDD 073 114 654

TYPICAL

TITLE: CIVIL
TRENCHES 10 AND 11
TYPICAL FINAL GRADING PLAN

DRAWN BY: MK 6/4/98	DATE	SCALE:	FILE CODE PRMI-L03F
CHECKED	DATE	ENGINEER	DATE
PROJ. MGR.	DATE	APPROVED	DATE

DWG. NO. PRMI-L03
PROJ. NO. PRMI
REV. NO. F

DWG. NO. PRMI-L03
PROJ. NO. PRMI

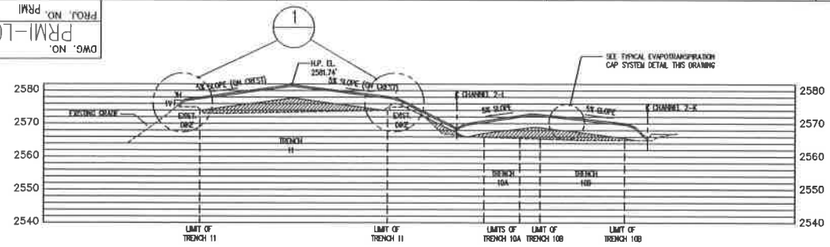

SECTION A–A
SCALE: 1"=50' HORIZ.
1"=20' VERT.
L01 L02 L03

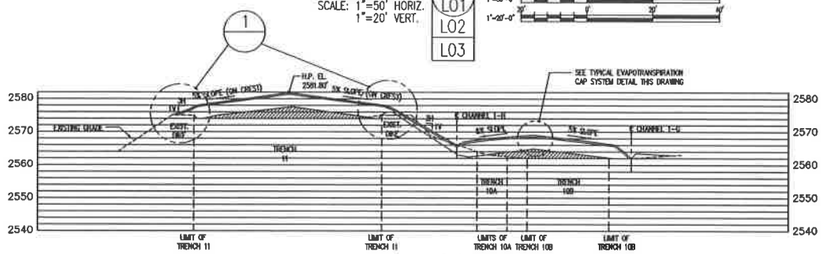

SECTION B–B
SCALE: 1"=50' HORIZ.
1"=20' VERT.
L01 L02 L03

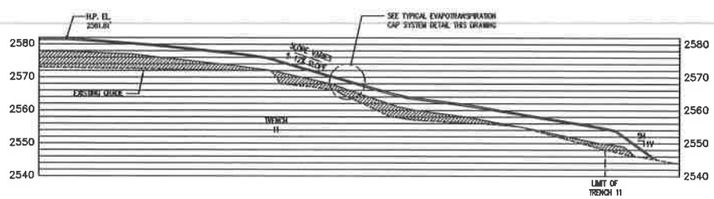

SECTION C–C
SCALE: 1"=50' HORIZ.
1"=20' VERT.
L01 L02 L03

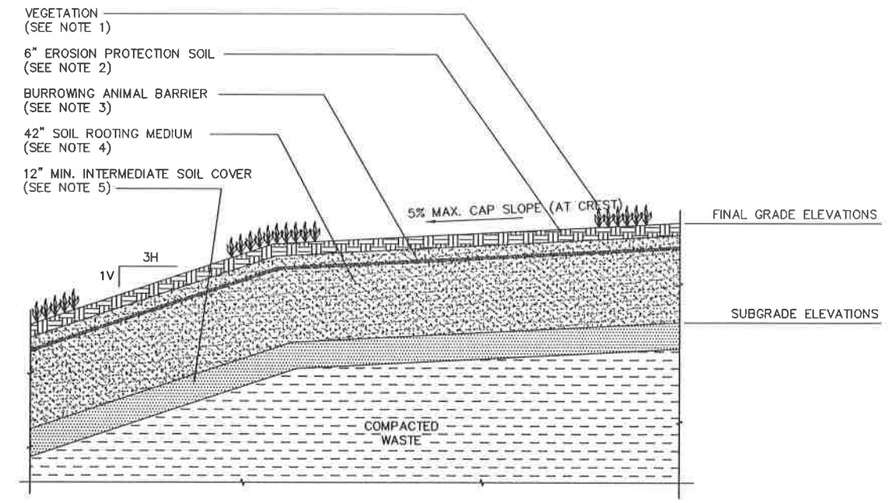

TYPICAL EVAPOTRANSPIRATION CAP SYSTEM
(TOP/3H:1V SIDESLOPE INTERFACE DETAIL)
SCALE: 3/8" = 1'-0"

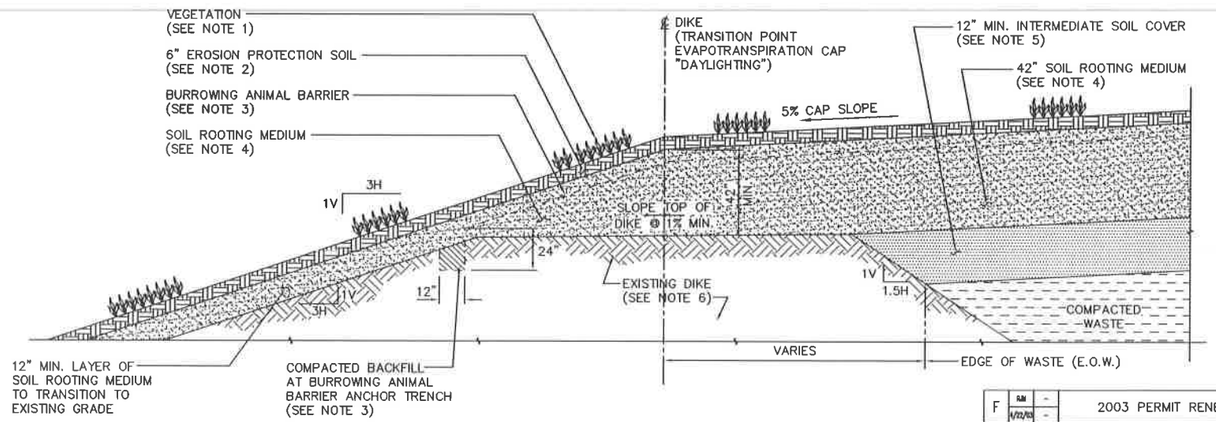

TYPICAL EVAPOTRANSPIRATION CAP SYSTEM
(TIE–IN TO EXISTING TRENCH 11 NORTH AND SOUTHWEST DIKES)

DETAIL 1 / L03
SCALE: 3/8" = 1'-0"

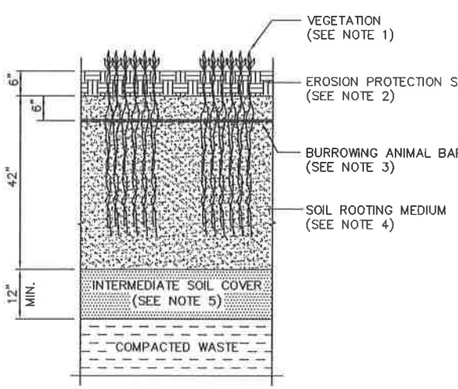

TYPICAL EVAPOTRANSPIRATION
CAP SYSTEM DETAIL
SCALE: 3/4"=1'-0"

TYPICAL CAP SYSTEM NOTES:

1. THE SURFACE OF THE FINAL COVER WAS SCARIFIED AND SEEDED TO ESTABLISH VEGETATION. THE FOLLOWING SEED MIX WAS USED:
   CRESTED WHEATGRASS (15 lbs/acre)
   SIBERIAN WHEATGRASS (18 lbs/acre)
   STREAMBANK WHEATGRASS (18 lbs/acre)

   THE SEED WAS APPLIED BY A RANGELAND DRILL TO A DEPTH OF 0.5 TO 0.75 INCH. MULCH WAS APPLIED OVER SEEDED AREAS AND CONSISTS OF STRAW AND TACKIFIER.
2. THE TOP LAYER (EROSION PROTECTION SOIL LAYER) OF THE EVAPOTRANSPIRATION (ET) COVER CONSISTS OF 6 INCHES OF GRAVELLY SOIL TO INHIBIT EROSION OF THE COVER AND PROMOTE GROWTH OF VEGETATION. IT CONSISTS OF BOTH SILTY SAND (SM) AND SILTY GRAVEL WITH SAND (GM), BLENDED THOROUGHLY IN APPROXIMATE PROPORTIONS OF 50/50 PER CENT (PLUS OR MINUS 15) BY VOLUME (BANK). THIS LAYER WAS NOT COMPACTED OTHER THAN COMPACTION FROM EQUIPMENT TRAFFIC DURING PLACEMENT.
3. THE BURROWING ANIMAL BARRIER CONSISTS OF: CLASS 1 GALV. STEEL WIRE POULTRY FENCING WITH 1 INCH MESH. THE FENCING WAS PLACED SO THAT THE SEAMS RUN EAST TO WEST AND THE SEAMS OVERLAPPED A MIN. OF 0.5–FOOT AND WERE TIED IN–PLACE @ 5' C.C. THE FENCING WAS PLACED AT A MINIMUM DEPTH OF 12 INCHES BELOW THE FINAL SURFACE OF THE EROSION PROTECTION SOIL. THE PERIMETER OF THE BURROWING ANIMAL BARRIER WAS BURIED IN AN ANCHOR TRENCH AS DEPICTED IN DETAIL 1 OF THIS SHEET.
4. THE SOIL ROOTING MEDIUM OF THE (ET) COVER IS AT APPROXIMATELY 42 INCHES THICK, LIES IMMEDIATELY BENEATH THE EROSION PROTECTION LAYER AND CONSISTS OF SANDY SILT (ML) OR SILTY SAND (SM).
5. THE INTERMEDIATE SOIL COVER WAS GRADED TO THE CONTOURS AND ELEVATIONS SHOWN ON DRAWING NO. PRMI–L02.
6. THE EXISTING TRENCH 11 PERIMETER DIKES WERE CONSTRUCTED OF THE FOLLOWING TYPE OF SOILS:
   COARSE–GRAINED GRANULAR SOILS COMPACTED IN LIFTS TO 90% MAXIMUM PROCTOR DENSITY.
7. CONCURRENT WITH THE FULL SCALE CONSTRUCTION OF THE EVAPOTRANSPIRATION CAP SYSTEM FOR TRENCHES 10 AND 11, A TEST PAD WAS CONSTRUCTED AND IS BEING MONITORED FOR PERFORMANCE, AS SHOWN ON DRAWING PRMI–L06. ALL SOILS USED FOR CONSTRUCTION OF THE FULL SCALE COVER SYSTEM AND TEST PAD, WERE ON–SITE SOILS FROM THE OWNER'S BORROW SOURCE.

REV.	BY / DATE	CHK'D / DATE	DESCRIPTION	PROJ ENGR / DATE	SUPV ENGR / DATE
F	RJM / 4/22/03	– / –	2003 PERMIT RENEWAL	– / –	AI / 4/22/03
E	MK / 4/2/01	– / –	ISSUED IN RESPONSE TO NOD LETTER DATED JUNE 30, 1999	– / –	MMS / 4/2/01
D	MK / 1/10/01	– / –	AS–BUILT. SUBMITTED WITH CQA REPORT AND CONSTRUCTION CERTIFICATION	– / –	– / –
C	MK / 4/15/99	– / –	ISSUED IN RESPONSE TO N.O.D. LETTER DATED 4/5/99	– / –	– / –
B	MK / 1/15/99	– / –	ISSUED FOR JANUARY 1999 CLASS 3 PERMIT MODIFICATION	– / –	– / –
A	MK / 7/28/98	– / –	ISSUED FOR PART B PERMIT RENEWAL APPLICATION	– / –	– / –

USEcology Idaho
an American Ecology company

SITE B
GRAND VIEW, IDAHO
US EPA ID NO. IDD 073 114 654

TITLE: CIVIL – TRENCHES 10 AND 11
CAP SYSTEM SECTIONS AND DETAILS
TYPICAL FINAL CLOSURE

DRAWN BY: MK DATE 7/9/98	SCALE:	FILE CODE PRMIL04F	REV. NO.
CHECKED DATE	ENGINEER DATE	DWG. NO. PRMI–L04	F
PROJ. MGR. DATE	APPROVED DATE	PROJ. NO. PRMI	

DWG. NO. PRMI–L04
PROJ. NO. PRMI

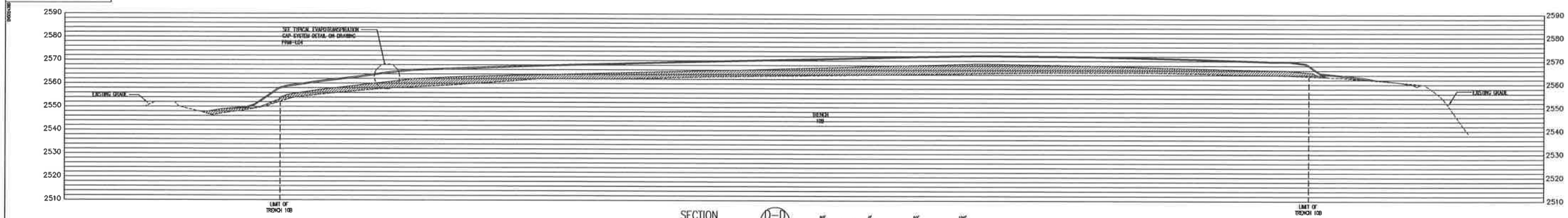

SECTION D–D (L01, L02, L03)
SCALE: 1"=50' HORIZ. 1"=20' VERT.

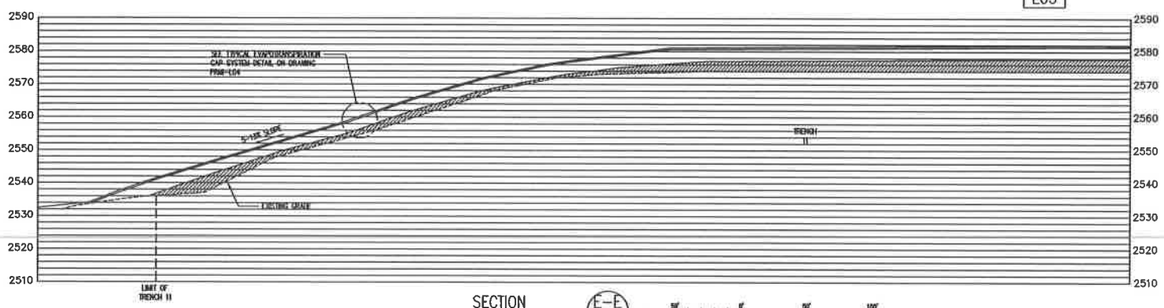

SECTION E–E (L01, L02, L03)
SCALE: 1"=50' HORIZ. 1"=20' VERT.

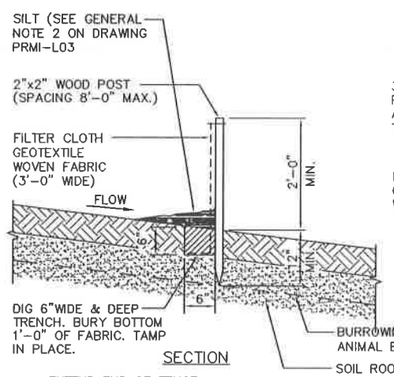

SECTION

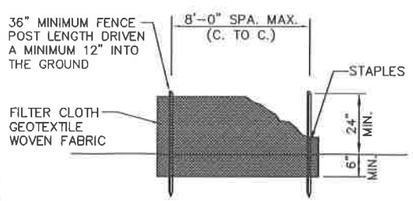

ELEVATION

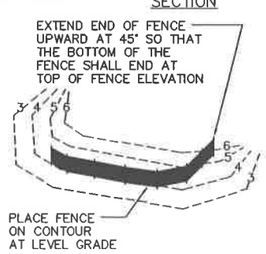

PERSPECTIVE

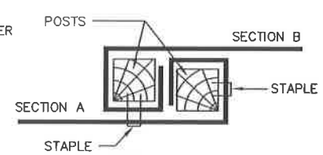

JOINING TWO ADJACENT SILT FENCE SECTIONS

STANDARD SILT FENCE
DETAIL 4 / L03
SCALE: 1" = 1'-0"

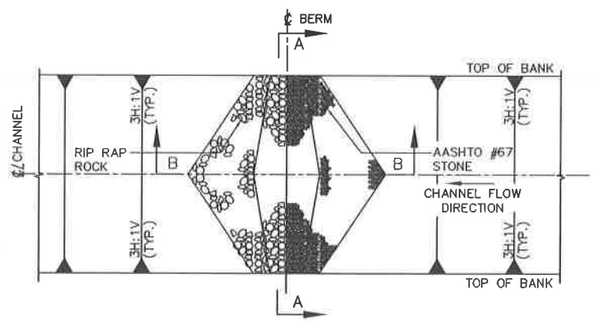

PLAN VIEW
SCALE: 1/2" = 1'-0"

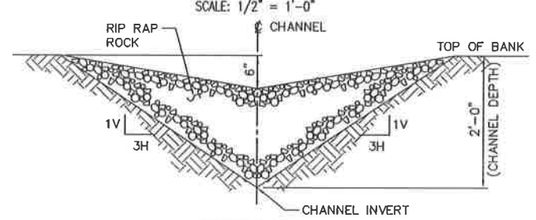

SECTION A–A

ROCK FILTER DAM
DETAIL 2 / L03
SCALE: 1" = 1'-0"

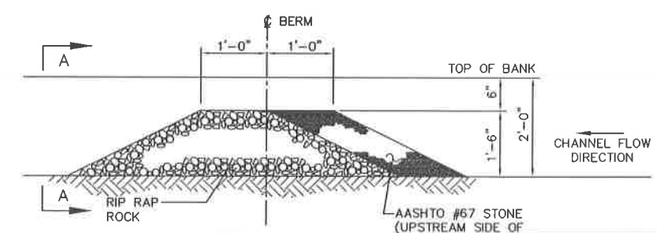

SECTION B–B

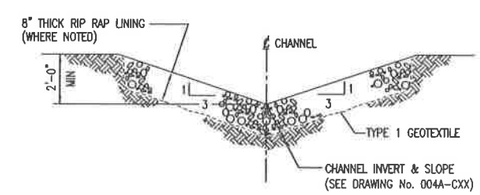

TYPICAL RUN-OFF CHANNELS
DETAIL 3 / L03
SCALE: N.T.S.

REV.	BY / DATE	CHK'D / DATE	DESCRIPTION	PROJ. ENGR. / DATE	SURV. ENGR. / DATE
D	BJM / 4/23/03	- / -	2003 PERMIT RENEWAL	- / -	JH / 4/23/03
C	MK / 4/2/01	- / -	ISSUED IN RESPONSE TO NOD LETTER DATED JUNE 30, 1999	- / -	MBS / 4/2/01
B	MK / 1/10/00	- / -	AS-BUILT. SUBMITTED WITH CQA REPORT AND CONSTRUCTION CERTIFICATION	- / -	- / -
A	MK / 4/15/99	- / -	ISSUED IN RESPONSE TO N.O.D. LETTER DATED 4/5/99	- / -	- / -

USEcology Idaho
an American Ecology company

SITE B
GRAND VIEW, IDAHO
US EPA ID NO. IDD 073 114 654

TITLE: CIVIL – TRENCHES 10 AND 11
TYPICAL FINAL CLOSURE
CAP SYSTEM SECTIONS AND DETAILS

DRAWN BY: MK	DATE	SCALE:		FILE CODE PRMIL05D		REV. NO.
CHECKED	DATE	ENGINEER	DATE	DWG. NO. PRMIL-05		D
PROJ. MGR.	DATE	APPROVED	DATE	PROJ. NO. PRMI		

DWG. NO. PRMI-L05
PROJ. NO. PRMI

DWG. NO. PRMI-L06
PROJ. NO. PRMI

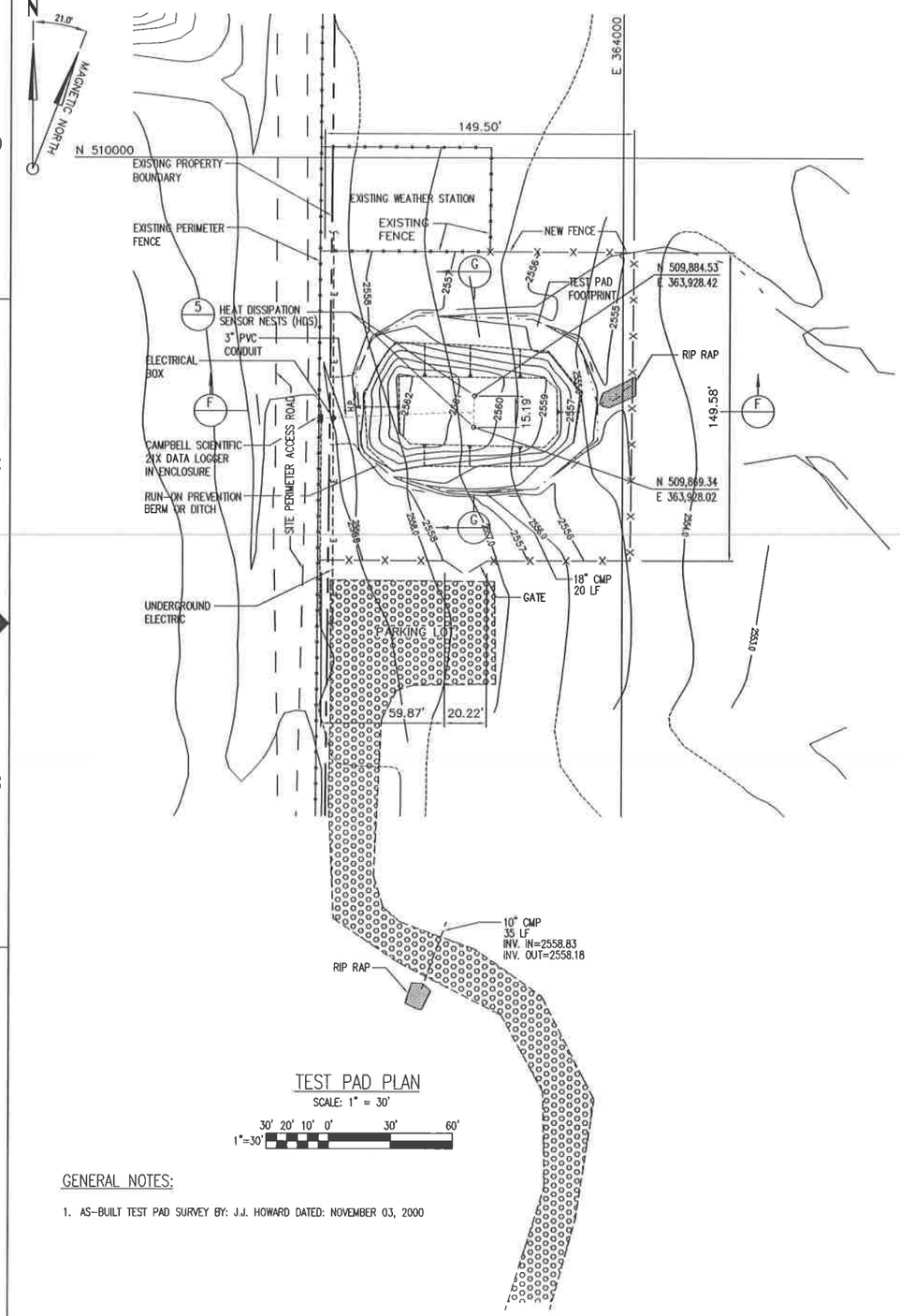

TEST PAD PLAN

SCALE: 1" = 30'

30' 20' 10' 0' 30' 60'
1"=30'

GENERAL NOTES:

1. AS-BUILT TEST PAD SURVEY BY: J.J. HOWARD DATED: NOVEMBER 03, 2000

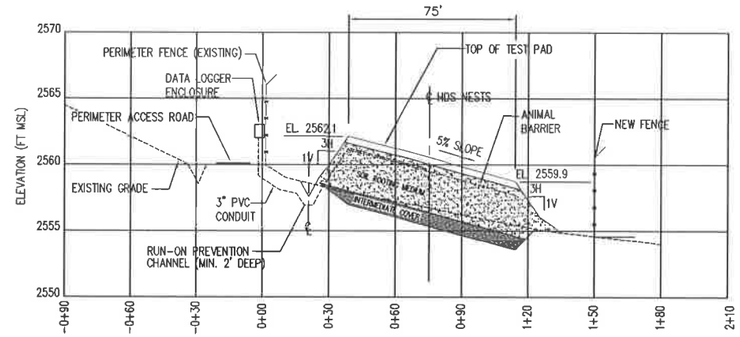

NOTES

1. REFER TO DRAWING PRMI-L04 FOR DETAILS OF TYPICAL EVAPOTRANSPIRATION CAP SYSTEM.
2. TEST PAD WAS CONSTRUCTED ACCORDING TO THE DETAILS SHOWN ON THIS DRAWING AND CONCURRENTLY WITH THE CONSTRUCTION OF THE FULL SCALE EVAPOTRANSPIRATION CAP SYSTEM FOR TRENCHES 10 AND 11.

TEST PAD SECTION

SECTION F-F

SCALE: 1" = 30' HORIZ.
1" = 5' HORIZ.

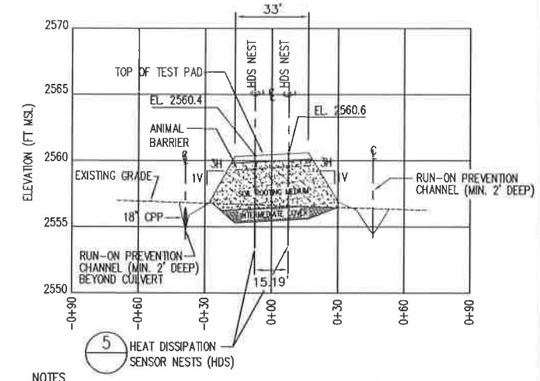

NOTES

1. REFER TO DRAWING PRMI-L04 FOR DETAILS OF TYPICAL EVAPOTRANSPIRATION CAP SYSTEM.
2. TEST PAD WAS CONSTRUCTED ACCORDING TO THE DETAILS SHOWN ON THIS DRAWING AND CONCURRENTLY WITH THE CONSTRUCTION OF THE FULL SCALE EVAPOTRANSPIRATION CAP SYSTEM FOR TRENCHES 10 AND 11.
3. PERIMETER OF TEST PAD GRADED TO PROVIDE POSITIVE DRAINAGE AWAY FROM TOE OF SIDESLOPES.

TEST PAD SECTION

SECTION G-G

SCALE: 1" = 30' HORIZ.
1" = 5' HORIZ.

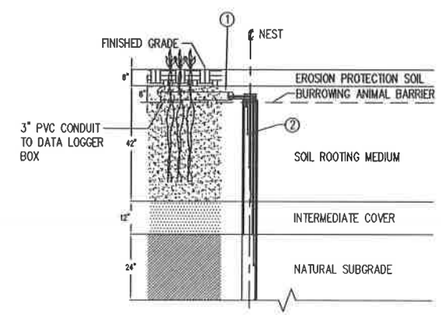

HEAT DISSIPATION SENSOR NEST (HDS) DETAIL

DETAIL 5

SCALE: 1" = 2'

NOTES

1. REFER TO DRAWING PRMI-L04 FOR DETAILS OF TYPICAL EVAPOTRANSPIRATION CAP SYSTEM
2. TEST PAD WAS CONSTRUCTED ACCORDING TO THE DETAILS SHOWN ON THIS DRAWING AND CONCURRENTLY WITH THE CONSTRUCTION OF THE FULL SCALE EVAPOTRANSPIRATION CAP SYSTEM FOR TRENCHES 10 AND 11, AT 5% MIN. SLOPE.
3. 7" BORING AUGERED TO SPECIFIED DEPTH FOR INSTALLATION OF HDS AND IS BACK FILLED AFTER INSTALLATION WITH APPROPRIATE COVER MATERIALS TO PROPER DEPTHS AS SHOWN.

KEYED NOTES

1. HDS LEADS WERE CONTINUOUS FROM SENSOR TO DATA LOGGER BOX.
2. CAMPBELL SCIENTIFIC 229-L HEAT DISSIPATION SENSORS (HDS). 8 AT EACH NEST.

REV.	BY / DATE	CHK'D / DATE	DESCRIPTION	PROJ ENGR / DATE	SUPV ENGR / DATE
D	BJH / 4/23/03	- / -	2003 PERMIT RENEWAL	- / -	JH / 4/23/03
C	MK / 4/2/01	- / -	ISSUED IN RESPONSE TO NOD LETTER DATED JUNE 30, 1999	- / -	- / -
B	MK / 11/10/00	- / -	AS-BUILT. SUBMITTED WITH CQA REPORT AND CONSTRUCTION CERTIFICATION	- / -	- / -
A	MK / 4/13/99	- / -	ISSUED IN REPONSE TO N.O.D. LETTER DATED 4/5/99	- / -	- / -

US Ecology Idaho
an American Ecology company

SITE B
GRAND VIEW, IDAHO
US EPA ID NO. IDD 073 114 654

PROFESSIONAL ENGINEER LAND SURVEYOR REGISTERED 2471 STATE OF IDAHO JAMES J. HOWARD

TITLE: CIVIL
ET CAP TEST PAD
TYPICAL PLAN, SECTIONS AND DETAILS

DRAWN BY: KF	DATE 6/09/99	SCALE:	FILE CODE PRMILO6D	REV. NO.
CHECKED	DATE	ENGINEER DATE	DWG. NO. PRMI-L06	D
PROJ. MGR.	DATE	APPROVED DATE	PROJ. NO. PRMI	

DWG. NO. PRMI-L11
PROJ. NO. PRMI

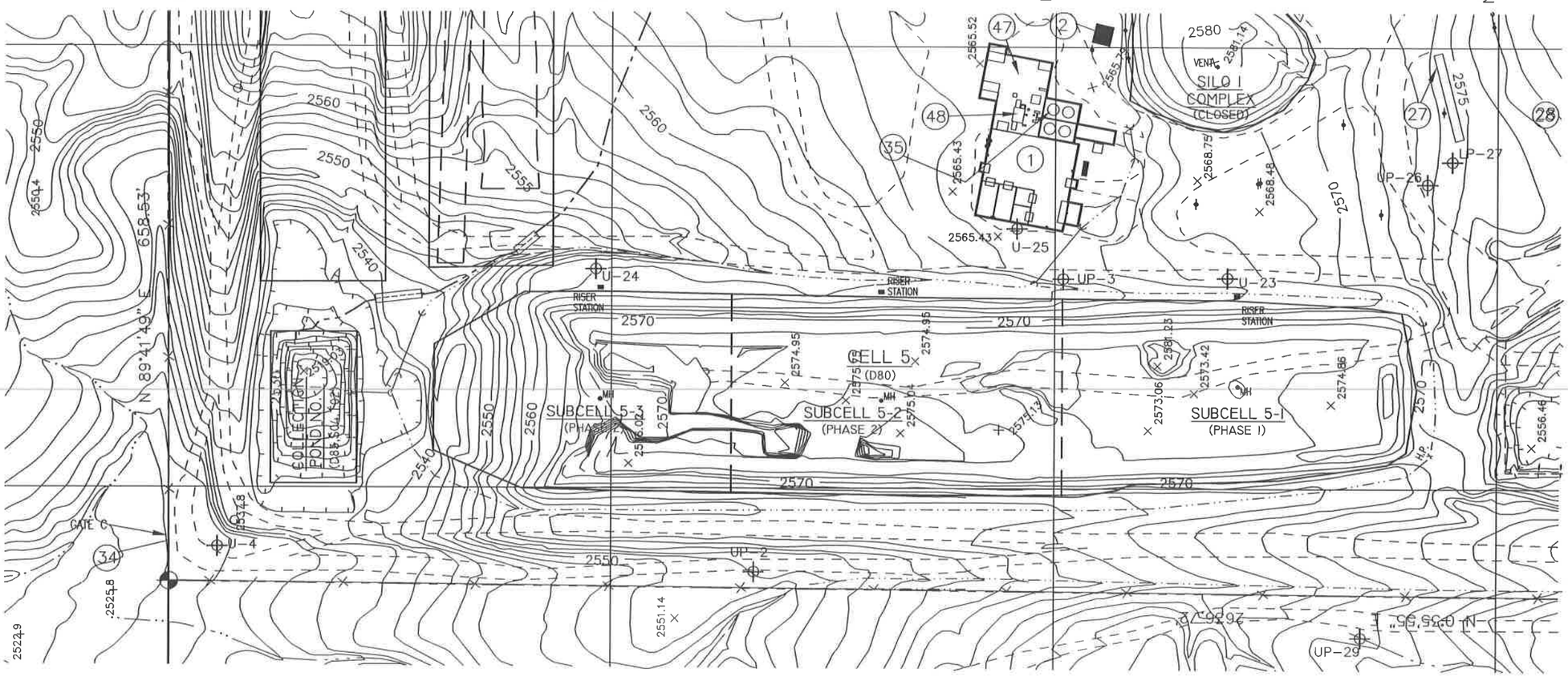

LEGEND

- 5/8" IRON PIN W/ ALUMINUM CAP
- POWER POLE
- 2544.70 — SPOT ELEVATION
- U-14 — WELL
- FENCE LINE
- PROPERTY BOUNDARY
- UNIMPROVED ROAD
- 2550 — EXISTING TOPOGRAPHY AS OF NOV. 4, 1995
- RCRA UNIT BOUNDARY
- CULVERT
- DRAINAGE
- CARRIER PIPE
- POND WATER TRANSFER PIPE
- (34) — FACILITY KEY NUMBER

FACILITY KEY

1	PAD 4 PROCESS PLANT
2	COMPRESSOR/M.C.C. BUILDING
27	SAMPLING PLATFORM
28	STAGING AREA
34	EVACUATION GATES
35	RCRA/TSCA STORAGE TANKS

GENERAL NOTES:

1. EXISTING SITE TOPOGRAPHY, PHYSICAL FEATURES AND DELINEATIONS OBTAINED FROM AERIAL PHOTOGRAPHY AND SURVEYED DATUM PROVIDED TO ENVIROSOURCE TECHNOLOGIES BY: J.J. HOWARD ENGINEERING–SURVEYING; 1675–A HILL ROAD; BOISE, IDAHO 83702. DATE OF ORIGINAL SURVEY – NOVEMBER 4, 1995.
2. ADDITIONALLY THE FOLLOWING AREAS OF THE SITE HAVE BEEN UPDATED AND INCORPORATED INTO THE EXISTING SITE PLAN AS FOLLOWS:
   - A. THE CURRENT TOP OF WASTE ELEVATIONS FOR CELL 5 AS OF JANUARY 2, 1996. SURVEY BY: J.J. HOWARD.
   - B. THE CURRENT TOP OF WASTE ELEVATIONS FOR CELL 14 AS OF DECEMBER 30, 1997. SURVEY BY: J.J. HOWARD.
   - C. UPDATE OF EXISTING SURFACE TOPOGRAPHY NORTH OF SUB–CELL 14–6 AS OF APRIL 27, 1998. SURVEY BY: J.J. HOWARD.
   - D. STABILIZATION AND CONTAINMENT BUILDING UPDATED AS OF JANUARY 14, 1997. SURVEY BY: J.J. HOWARD. DESIGN CONTOURS BY: ENVIROSOURCE TECHNOLOGIES.
   - E. PAD 4 PROCESS PLANT AREA UPDATED AS OF APRIL 15, 1998. SURVEY BY: J.J. HOWARD.
3. AN ADDITIONAL 1,000 FEET TO THE NORTH OF SECTION 19 HAS BEEN SURVEYED AND INCORPORATED INTO THE EXISTING TOPOGRAPHY. SURVEY BY: J.J. HOWARD DATED FEBRUARY 20, 1998.

MAGNETIC NORTH 21.5°

60' 40' 20' 0' 60' 120'

REV.	BY / DATE	CHK'D / DATE	DESCRIPTION	PROJ ENGR / DATE	SURV ENGR / DATE
B	RJM 6/23/98	- -	2003 PERMIT RENEWAL	- -	JH 6/23/98
A	MK 7/28/98	- -	ISSUED FOR PART B PERMIT RENEWAL APPLICATION	- -	- -

USEcology Idaho
an American Ecology company

SITE B
GRAND VIEW, IDAHO
US EPA ID NO. IDD 073 114 654

TITLE: FACILITY CELL 5 TYPICAL SITE PLAN

DRAWN BY: MK	DATE 6/04/98	SCALE:	FILE CODE PRMIL11B	REV. NO.
CHECKED	DATE	ENGINEER	DATE	DWG. NO. PRMI–L11	B
PROJ. MGR.	DATE	APPROVED	DATE	PROJ. NO. PRMI	

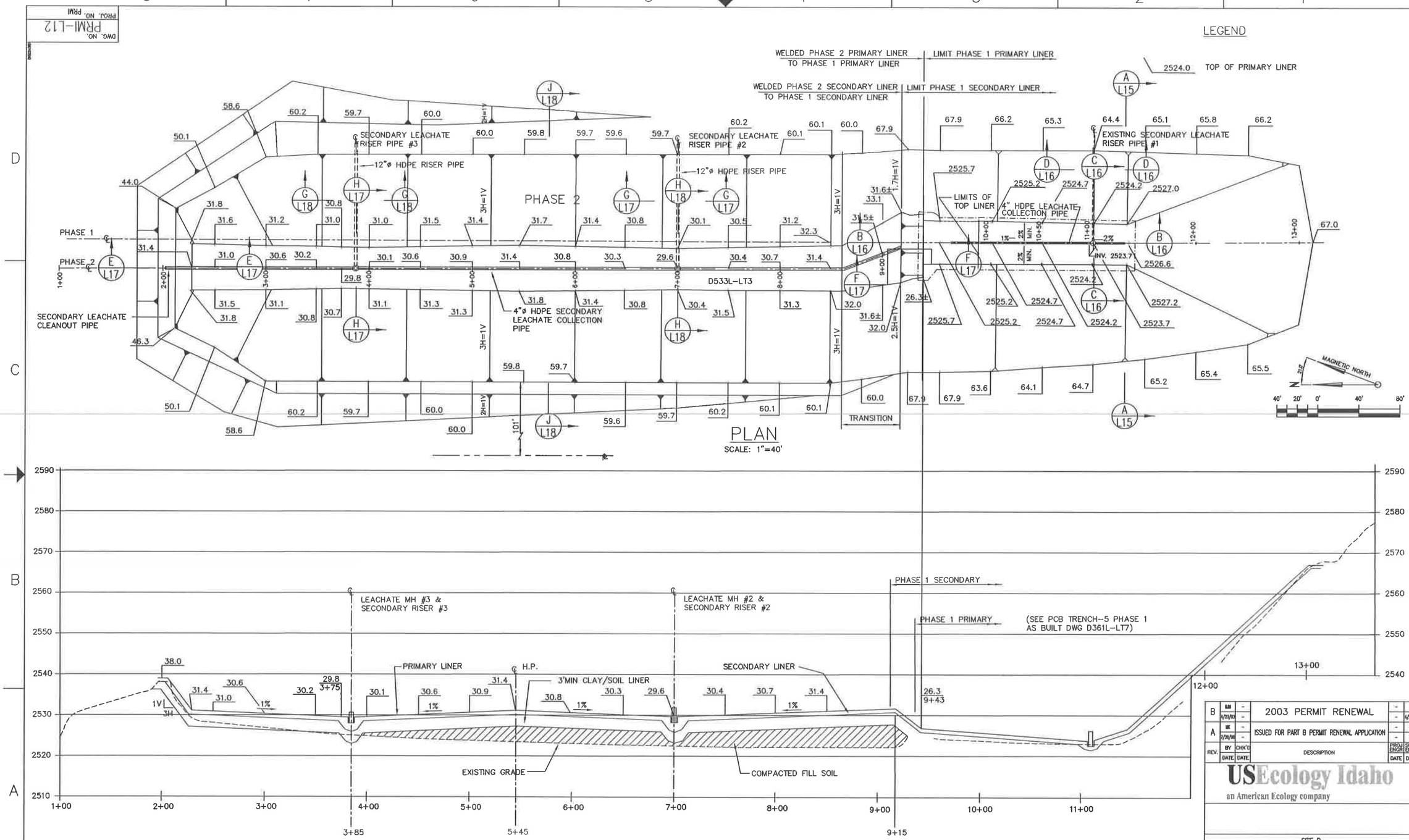

REV.	BY / DATE	CHK'D / DATE	DESCRIPTION	PROJ ENGR / DATE	SUPV ENGR / DATE
B	BJM 4/23/03	- -	2003 PERMIT RENEWAL	- -	JH 4/23/03
A	MK 7/28/98	- -	ISSUED FOR PART B PERMIT RENEWAL APPLICATION	- -	- -

USEcology Idaho
an American Ecology company

SITE B
GRAND VIEW, IDAHO
US EPA ID NO. IDD 073 114 654

TITLE:
CIVIL
CELL 5
TYPICAL PRIMARY LINER PLAN

DRAWN BY: MK	DATE 6/04/98	SCALE:	FILE CODE PRMIL12B	REV. NO.
CHECKED	DATE	ENGINEER DATE	DWG. NO. PRMI-L12	B
PROJ. MGR.	DATE	APPROVED DATE	PROJ. NO. PRMI	

DWG. NO. PRMI-L12
PROJ. NO. PRMI

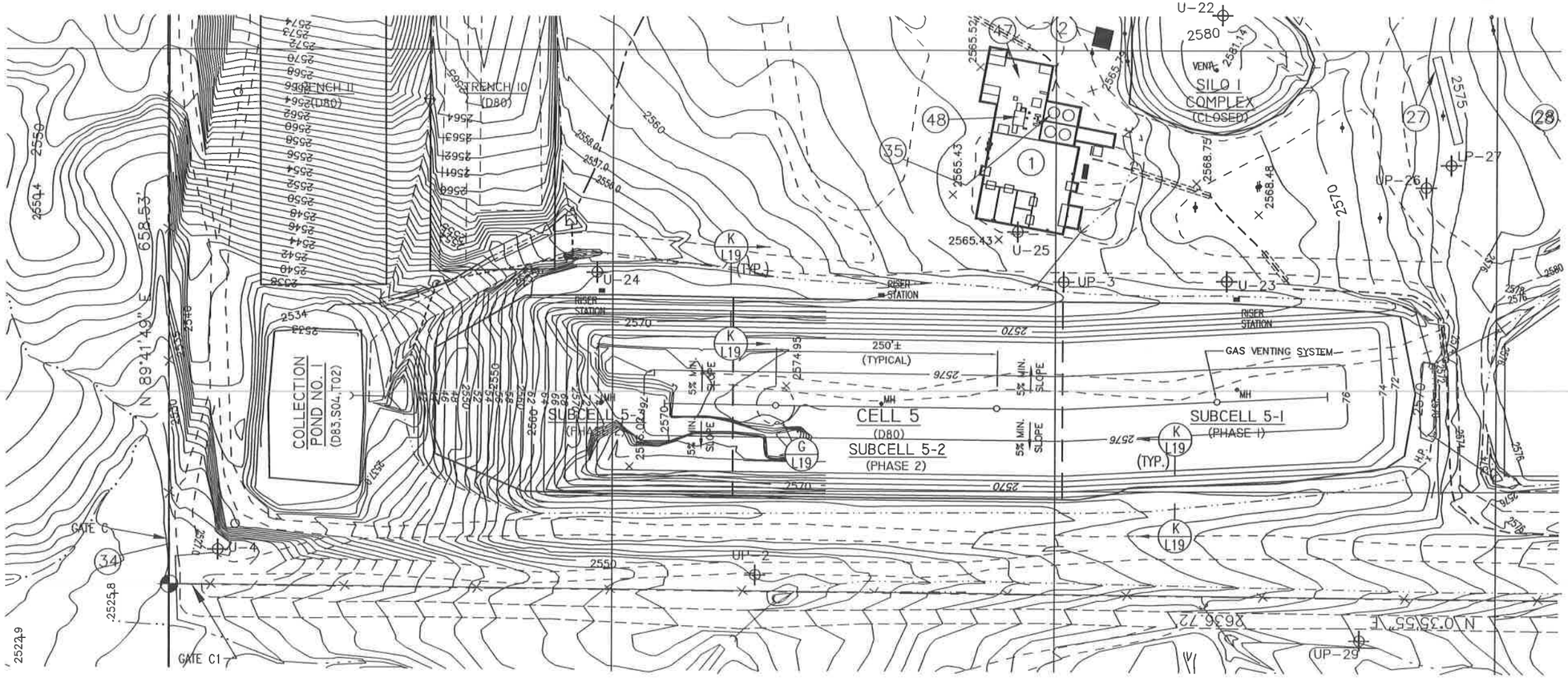

LEGEND

- 5/8" IRON PIN W/ ALUMINUM CAP
- POWER POLE
- 2544.70 — SPOT ELEVATION
- U-14 — WELL
- FENCE LINE
- PROPERTY BOUNDARY
- UNIMPROVED ROAD
- 2550 — EXISTING TOPOGRAPHY
- RCRA UNIT BOUNDARY
- CULVERT
- DRAINAGE
- CARRIER PIPE
- POND WATER TRANSFER PIPE
- 34 — FACILITY KEY NUMBER
- LEACHATE PIPE W/SLEEVE
- GAS VENTING SYSTEM

FACILITY KEY

1	PAD 4 PROCESS PLANT
2	COMPRESSOR/M.C.C. BUILDING
27	SAMPLING PLATFORM
28	STAGING AREA
34	EVACUATION GATES
35	RCRA/TSCA STORAGE TANKS

GENERAL NOTES:

1. EXISTING SITE TOPOGRAPHY, PHYSICAL FEATURES AND DELINEATIONS OBTAINED FROM AERIAL PHOTOGRAPHY AND SURVEYED DATUM PROVIDED TO ENVIROSOURCE TECHNOLOGIES BY: J.J. HOWARD ENGINEERING-SURVEYING; 1675-A HILL ROAD; BOISE, IDAHO 83702. DATE OF ORIGINAL SURVEY – NOVEMBER 4, 1995.
2. ADDITIONALLY THE FOLLOWING AREAS OF THE SITE HAVE BEEN UPDATED AND INCORPORATED INTO THE EXISTING SITE PLAN AS FOLLOWS:
   - A. AN ADDITIONAL 1,000 FEET TO THE NORTH OF SECTION 19 HAS BEEN SURVEYED AND INCORPORATED INTO THE EXISTING TOPOGRAPHY. SURVEY BY: J.J. HOWARD DATED FEBRUARY 20, 1998.
   - B. STABILIZATION AND CONTAINMENT BUILDING UPDATED AS OF JANUARY 14, 1997. SURVEY BY: J.J. HOWARD. DESIGN CONTOURS BY: ENVIROSOURCE TECHNOLOGIES.
   - C. PAD 4 PROCESS PLANT AREA UPDATED AS OF APRIL 15, 1998. SURVEY BY: J.J. HOWARD.
   - D. LEACHATE FORCE MAIN AND SOIL STOCKPILE SURVEY UPDATED AS OF FEBRUARY 15, 1999. SURVEY BY: J.J. HOWARD.
   - E. THE CURRENT TOP OF WASTE ELEVATIONS FOR CELL 5 AS OF JANUARY 2, 1996. SURVEY BY: J.J. HOWARD.
   - F. THE CURRENT TOP OF WASTE ELEVATIONS FOR CELL 14 AS OF JANUARY 04, 2001. SURVEY BY: J.J. HOWARD.
   - G. TOPOGRAPHY OF TRENCHES 10 AND 11 UPDATED AS OF SEPTEMBER 12, 2000. SURVEY BY: J.J. HOWARD.
   - H. UPDATE OF CONTAINER STORAGE AREA NO. 1 TOPOGRAPHY AS OF JUNE 18, 1999. SURVEY BY: J.J. HOWARD.
   - I. BORROW AREA TOPOGRAPHY UPDATED AS OF DECEMBER 12, 2000. SURVEY BY: J.J. HOWARD.
   - J. WEST HAUL ROAD TOPOGRAPHY UPDATED AS OF DECEMBER 05, 2000. SURVEY BY: J.J. HOWARD.
   - K. ET CAP TEST PAD TOPOGRAPHY UPDATED AS OF NOVEMBER 06, 2000. SURVEY BY: J.J. HOWARD.

MAGNETIC NORTH 21.5°

60' 40' 20' 0' 60' 120'

REV.	BY / DATE	CHK'D / DATE	DESCRIPTION	PROJ. ENGR / DATE	SURV. ENGR / DATE
D	BJM / 4/23/03	- / -	2003 PERMIT RENEWAL	- / -	JH / 4/23/03
C	MK / 4/2/01	- / -	ISSUED IN RESPONSE TO NOD LETTER DATED JUNE 30, 1999	- / -	MRS / 4/2/01
B	MK / 1/15/99	- / -	ISSUED FOR JANUARY 1999 CLASS 3 PERMIT MODIFICATION	- / -	- / -
A	MK / 7/28/98	- / -	ISSUED FOR PART B PERMIT RENEWAL APPLICATION	- / -	- / -

USEcology Idaho
an American Ecology company

SITE B
GRAND VIEW, IDAHO
US EPA ID NO. IDD 073 114 654

TITLE:
CIVIL
CELL 5
TYPICAL SUBGRADE PLAN AT CLOSURE

DRAWN BY: MK DATE 6/04/98	SCALE:	FILE CODE: PRMIL13D	REV. NO. D
CHECKED DATE	ENGINEER DATE	DWG. NO. PRMI-L13	
PROJ. MGR. DATE	APPROVED DATE	PROJ. NO. PRMI	

DWG. NO. PRMI-L13
PROJ. NO. PRMI

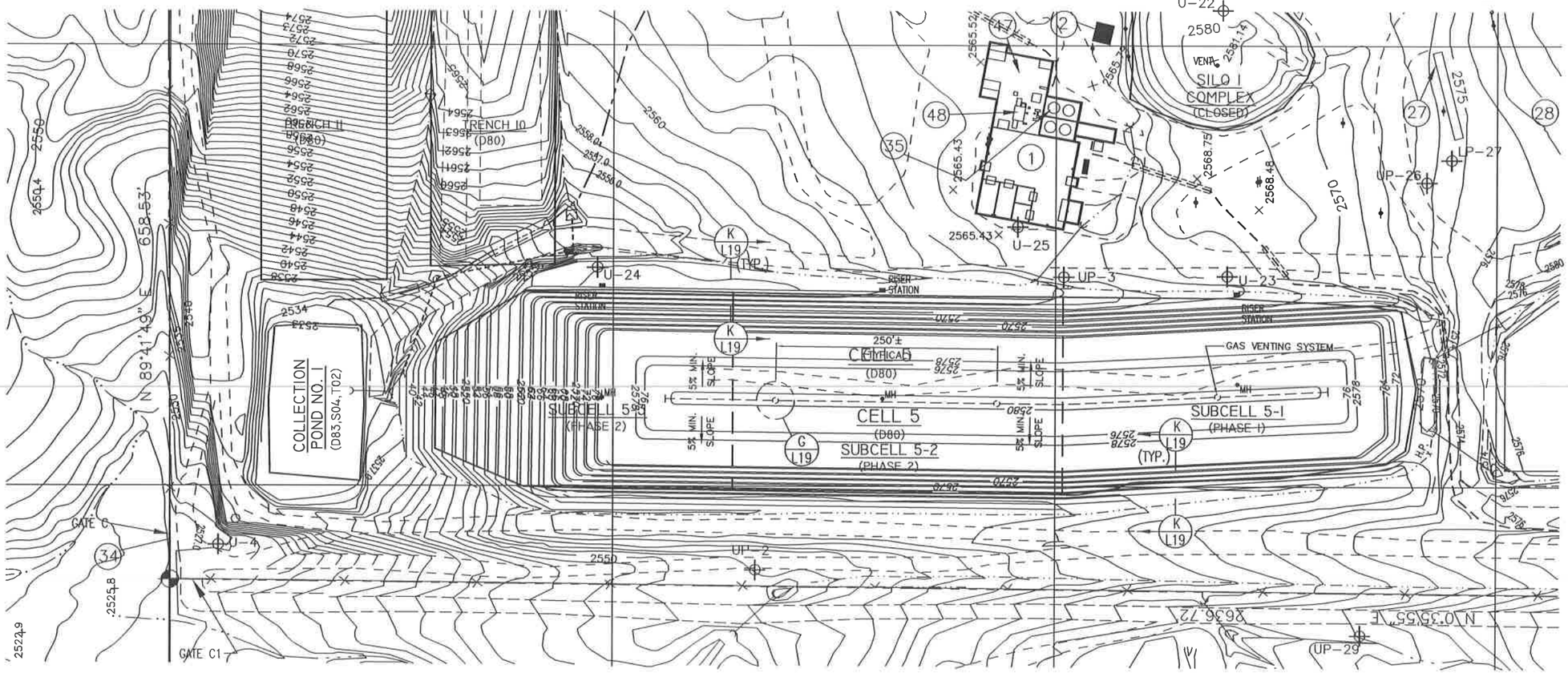

LEGEND

- 5/8" IRON PIN W/ ALUMINUM CAP
- POWER POLE
- 2544.70 — SPOT ELEVATION
- U-14 — WELL
- FENCE LINE
- PROPERTY BOUNDARY
- UNIMPROVED ROAD
- 2550 — EXISTING TOPOGRAPHY AS OF NOV. 4, 1995
- RCRA UNIT BOUNDARY
- CULVERT
- DRAINAGE
- CARRIER PIPE
- POND WATER TRANSFER PIPE
- (34) — FACILITY KEY NUMBER
- LEACHATE PIPE W/SLEEVE
- GAS VENTING SYSTEM

FACILITY KEY

1	PAD 4 PROCESS PLANT
2	COMPRESSOR/M.C.C. BUILDING
27	SAMPLING PLATFORM
28	STAGING AREA
34	EVACUATION GATES
35	RCRA/TSCA STORAGE TANKS

GENERAL NOTES:

1. EXISTING SITE TOPOGRAPHY, PHYSICAL FEATURES AND DELINEATIONS OBTAINED FROM AERIAL PHOTOGRAPHY AND SURVEYED DATUM PROVIDED TO ENVIROSOURCE TECHNOLOGIES BY: J.J. HOWARD ENGINEERING-SURVEYING; 1675-A HILL ROAD; BOISE, IDAHO 83702. DATE OF ORIGINAL SURVEY – NOVEMBER 4, 1995.

2. ADDITIONALLY THE FOLLOWING AREAS OF THE SITE HAVE BEEN UPDATED AND INCORPORATED INTO THE EXISTING SITE PLAN AS FOLLOWS:

   A. AN ADDITIONAL 1,000 FEET TO THE NORTH OF SECTION 19 HAS BEEN SURVEYED AND INCORPORATED INTO THE EXISTING TOPOGRAPHY. SURVEY BY: J.J. HOWARD DATED FEBRUARY 20, 1998.

   B. STABILIZATION AND CONTAINMENT BUILDING UPDATED AS OF JANUARY 14, 1997. SURVEY BY: J.J. HOWARD. DESIGN CONTOURS BY: ENVIROSOURCE TECHNOLOGIES.

   C. PAD 4 PROCESS PLANT AREA UPDATED AS OF APRIL 15, 1998. SURVEY BY: J.J. HOWARD.

   D. LEACHATE FORCE MAIN AND SOIL STOCKPILE SURVEY UPDATED AS OF FEBRUARY 15, 1999. SURVEY BY: J.J. HOWARD.

   E. THE CURRENT TOP OF WASTE ELEVATIONS FOR CELL 5 AS OF JANUARY 2, 1996. SURVEY BY: J.J. HOWARD.

   F. THE CURRENT TOP OF WASTE ELEVATIONS FOR CELL 14 AS OF JANUARY 04, 2001. SURVEY BY: J.J. HOWARD.

   G. TOPOGRAPHY OF TRENCHES 10 AND 11 UPDATED AS OF SEPTEMBER 12, 2000. SURVEY BY: J.J. HOWARD.

   H. UPDATE OF CONTAINER STORAGE AREA NO. 1 TOPOGRAPHY AS OF JUNE 18, 1999. SURVEY BY: J.J. HOWARD.

   I. BORROW AREA TOPOGRAPHY UPDATED AS OF DECEMBER 12, 2000. SURVEY BY: J.J. HOWARD.

   J. WEST HAUL ROAD TOPOGRAPHY UPDATED AS OF DECEMBER 05, 2000. SURVEY BY: J.J. HOWARD.

   K. ET CAP TEST PAD TOPOGRAPHY UPDATED AS OF NOVEMBER 06, 2000. SURVEY BY: J.J. HOWARD.

60' 40' 20' 0' 60' 120'
1"=60'-0"

REV.	BY / DATE	CHK'D / DATE	DESCRIPTION	PROJ. ENGR / DATE	SURV. ENGR / DATE
D	BJH / 4/23/03	- / -	2003 PERMIT RENEWAL	- / -	JH / 4/23/03
C	MK / 4/2/01	- / -	ISSUED IN RESPONSE TO NOD LETTER DATED JUNE 30, 1999	- / -	MRS / 4/2/01
B	MK / 1/13/99	- / -	ISSUED FOR JANUARY 1999 CLASS 3 PERMIT MODIFICATION	- / -	- / -
A	MK / 7/29/98	- / -	ISSUED FOR PART B PERMIT RENEWAL APPLICATION	- / -	- / -

USEcology Idaho
an American Ecology company

SITE B
GRAND VIEW, IDAHO
US EPA ID NO. IDD 073 114 654

TITLE:
CIVIL
CELL 5
TYPICAL FINAL GRADING PLAN

DRAWN BY: MK	DATE: 6/04/98	SCALE:		FILE CODE: PRMIL14D	REV. NO.
CHECKED	DATE	ENGINEER	DATE	DWG. NO. PRMI-L14	D
PROJ. MGR.	DATE	APPROVED	DATE	PROJ. NO. PRMI	

DWG. NO. PRMI-L14
PROJ. NO. PRMI

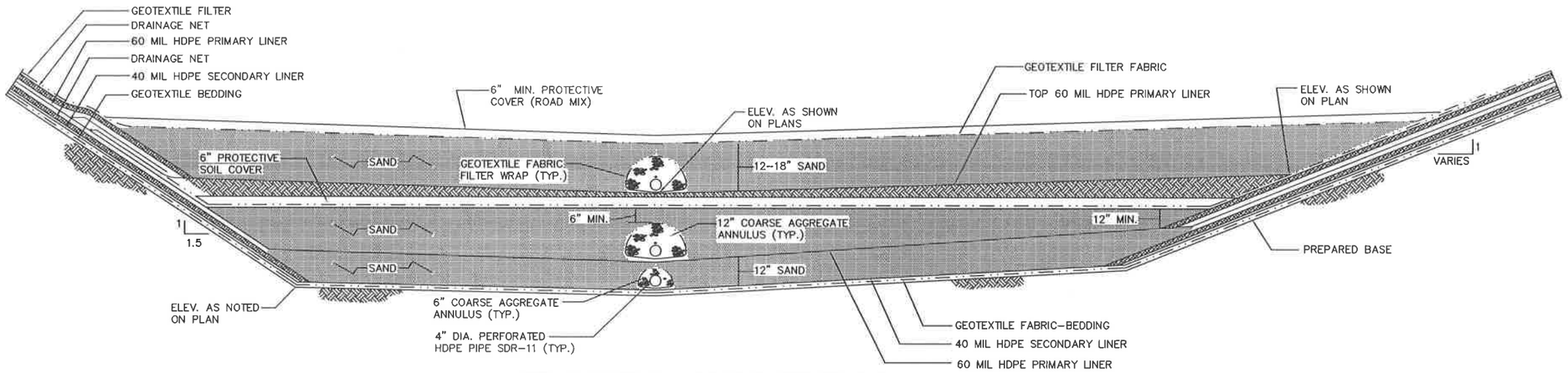

CELL 5 PHASE 1 – ENLARGED SECTION FOR PRIMARY AND SECONDARY LEACHATE COLLECTION SYSTEMS

DETAIL 1
SCALE: N.T.S.

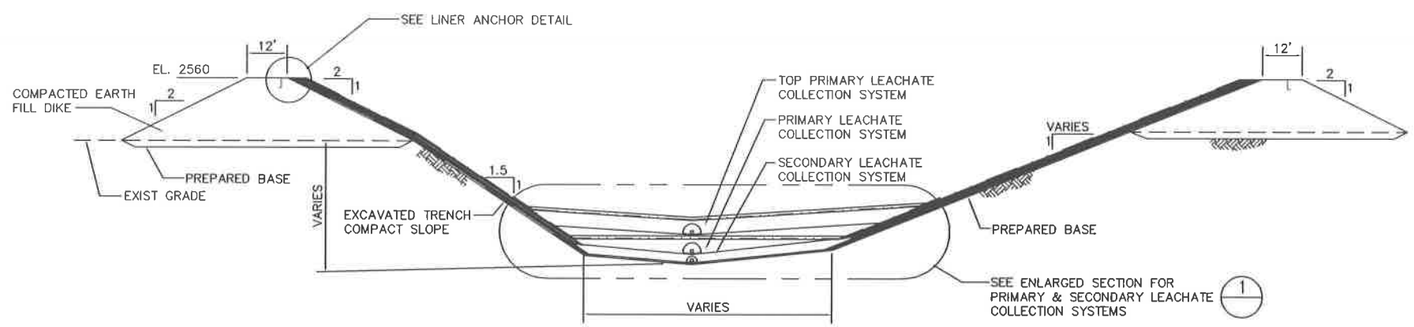

CELL 5 PHASE 1 – TYPICAL SECTION

SECTION A-A
SCALE: N.T.S. L12

REV.	BY / DATE	CHK'D / DATE	DESCRIPTION	PROJ ENGR / DATE	SUPV ENGR / DATE
B	RJM 4/23/03	- -	2003 PERMIT RENEWAL	- -	JH 4/23/03
A	MK 7/29/98	- -	ISSUED FOR PART B PERMIT RENEWAL APPLICATION	- -	- -

US Ecology Idaho
an American Ecology company

SITE B
GRAND VIEW, IDAHO
US EPA ID NO. IDD 073 114 654

TITLE:
CIVIL
CELL 5 – PHASE I
TYPICAL SECTIONS AND DETAILS

DRAWN BY: MK	DATE 6/10/98	SCALE:	FILE CODE PRMIL15B	REV. NO.
CHECKED	DATE	ENGINEER	DATE	DWG. NO. PRMI-L15	B
PROJ. MGR.	DATE	APPROVED	DATE	PROJ. NO. PRMI	

DWG. NO. PRMI-L15
PROJ. NO. PRMI

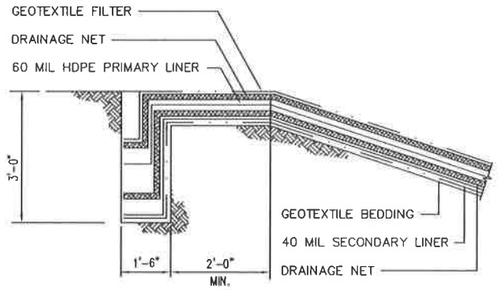

LINER ANCHOR TRENCH DETAIL

DETAIL 2/L15
SCALE: N.T.S.

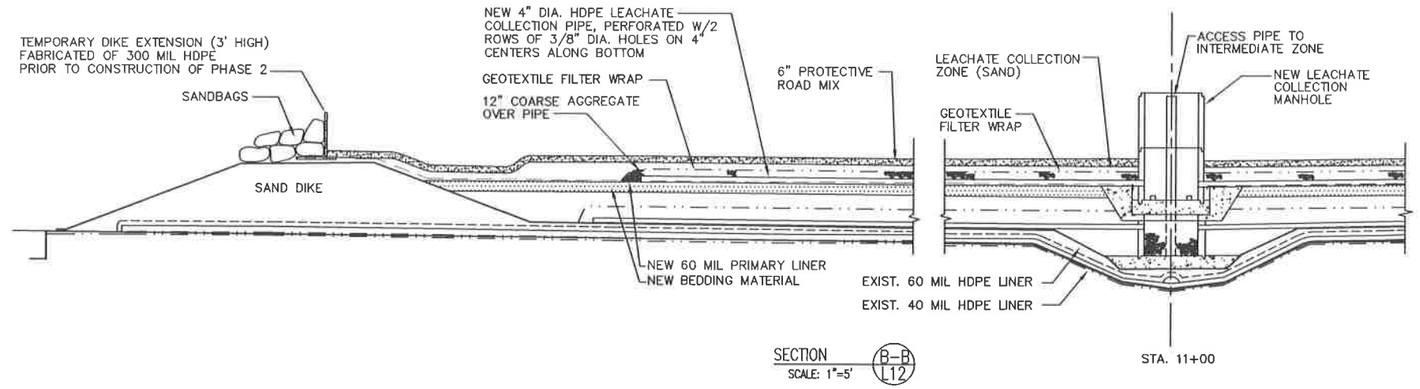

SECTION B-B/L12
SCALE: 1"=5'

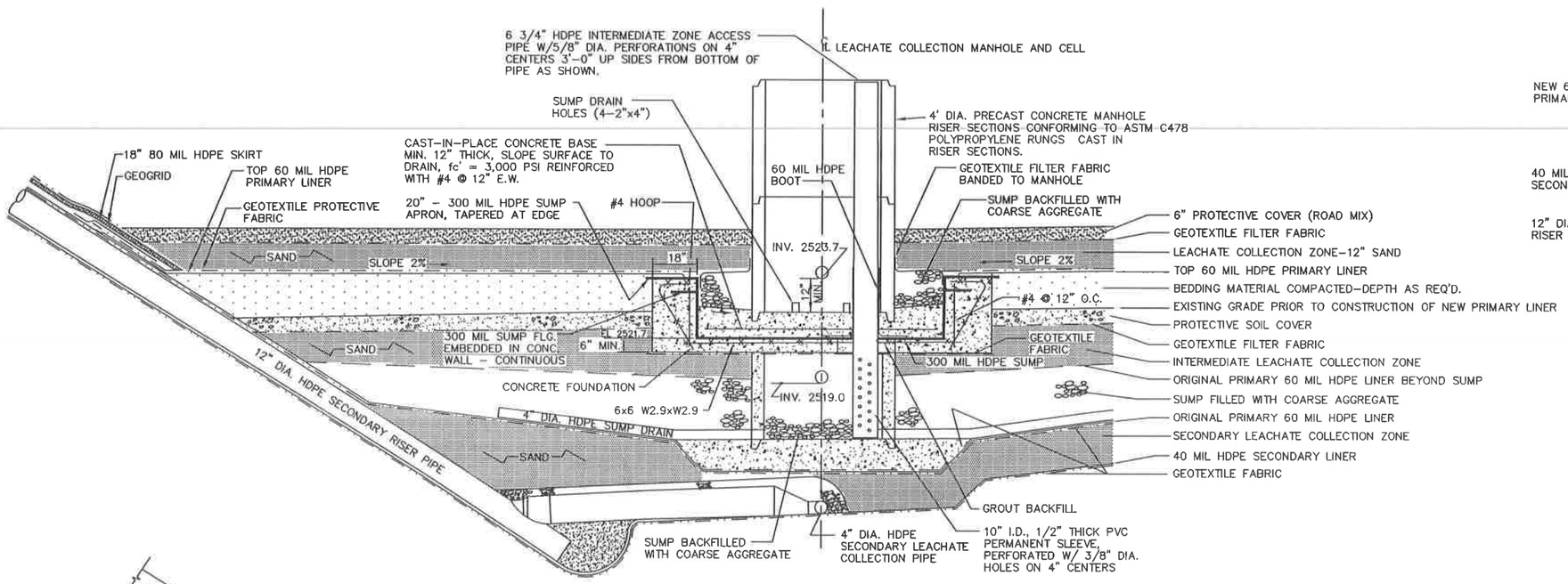

PHASE 1 SUMP DETAIL

SECTION C-C/L12
SCALE: 1"=2'

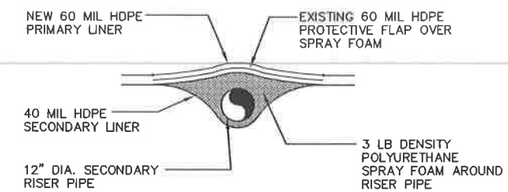

SECTION D-D/L12
SCALE: N.T.S.

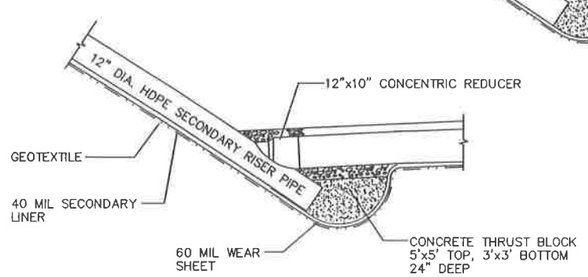

CONCRETE BASE FOR SECONDARY LEACHATE RISER

SCALE: N.T.S.

REV.	BY / DATE	CHK'D / DATE	DESCRIPTION	PROJ ENGR / DATE	SUPV ENGR / DATE
B	RJM 4/23/03	- -	2003 PERMIT RENEWAL	- -	JH 4/23/03
A	MK 7/28/98	- -	ISSUED FOR PART B PERMIT RENEWAL APPLICATION	- -	- -

USEcology Idaho
an American Ecology company

SITE 8
GRAND VIEW, IDAHO
US EPA ID NO. IDD 073 114 654

TITLE:
CIVIL
CELL 5 - PHASE I
TYPICAL SECTIONS AND DETAILS

DRAWN BY: MK	DATE 6/10/98	SCALE:	FILE CODE PRMIL16B	REV. NO.
CHECKED	DATE	ENGINEER DATE	DWG. NO. PRMI-L16	B
PROJ. MGR.	DATE	APPROVED DATE	PROJ. NO. PRMI	

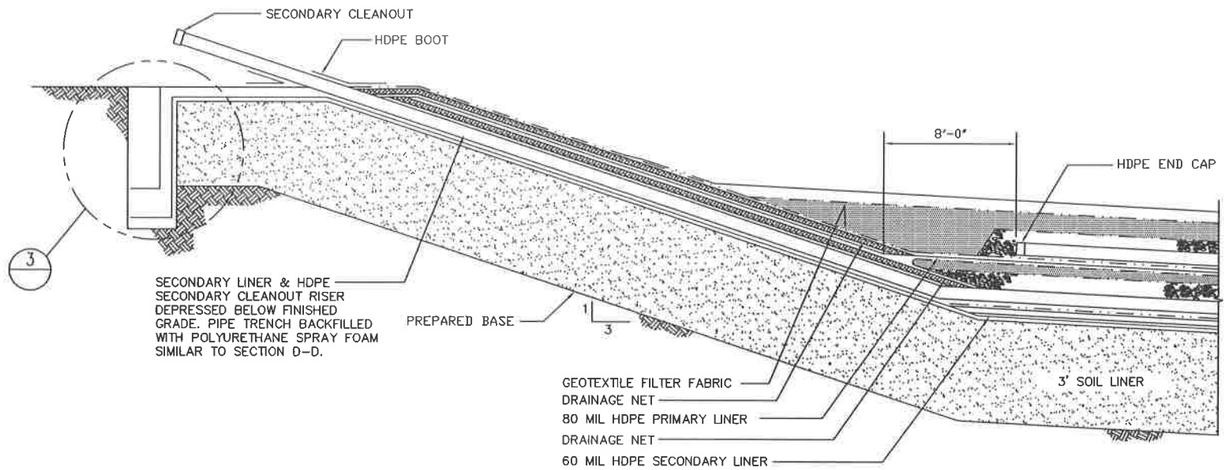

SECTION E-E L12
SCALE: N.T.S.

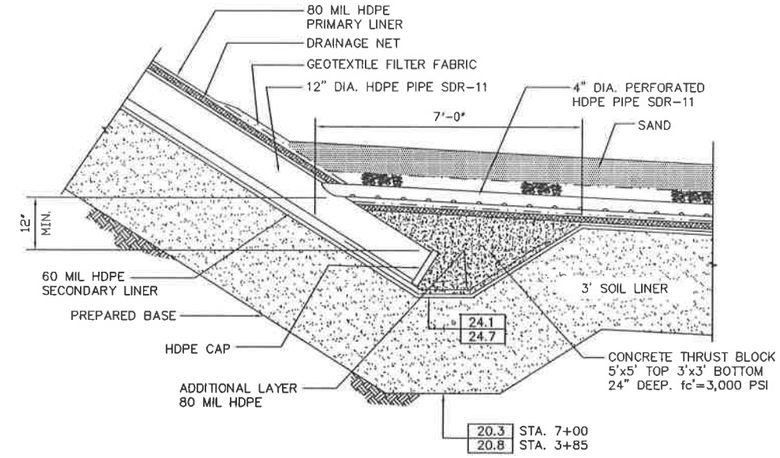

CONCRETE BASE FOR SECONDARY LEACHATE RISER

DETAIL 4 L18
SCALE: N.T.S.

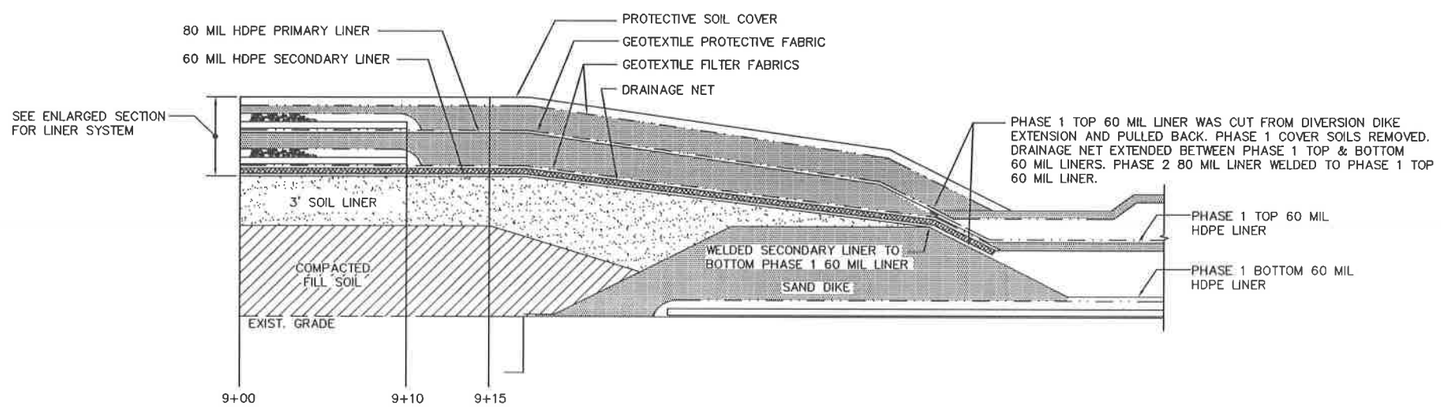

SECTION E-E L12
SCALE: N.T.S.

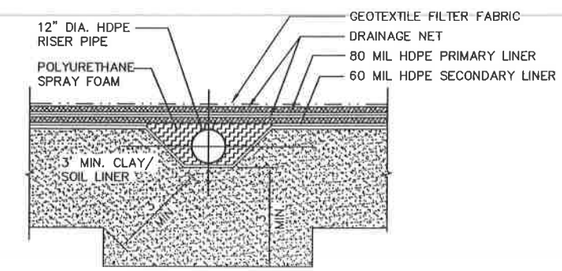

SECTION G-G L12
SCALE: N.T.S.

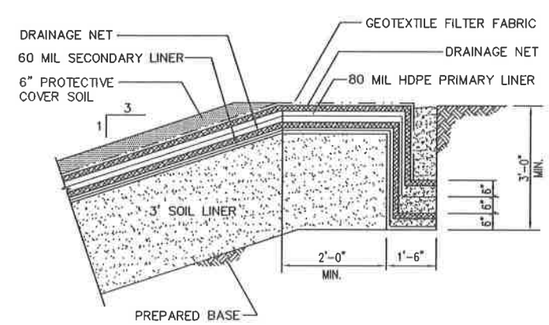

ANCHOR TRENCH DETAIL

DETAIL 3 L17/L18
SCALE: N.T.S.

REV.	BY / DATE	CHK'D / DATE	DESCRIPTION	PROJ. ENGR. / DATE	SUPV. ENGR. / DATE
B	RM / 4/23/03	- / -	2003 PERMIT RENEWAL	- / -	JH / 4/23/03
A	MK / 7/28/98	- / -	ISSUED FOR PART B PERMIT RENEWAL APPLICATION	- / -	- / -

USEcology Idaho
an American Ecology company

SITE B
GRAND VIEW, IDAHO
US EPA ID NO. IDD 073 114 654

TITLE:
CIVIL
CELL 5 – PHASE II
TYPICAL SECTIONS AND DETAILS

DRAWN BY: MK DATE 6/10/98	SCALE:	FILE CODE PRMIL17B	REV. NO.
CHECKED DATE	ENGINEER DATE	DWG. NO. PRMI-L17	B
PROJ. MGR. DATE	APPROVED DATE	PROJ. NO. PRMI	

DWG. NO. PRMI-L18
PROJ. NO. PRMI

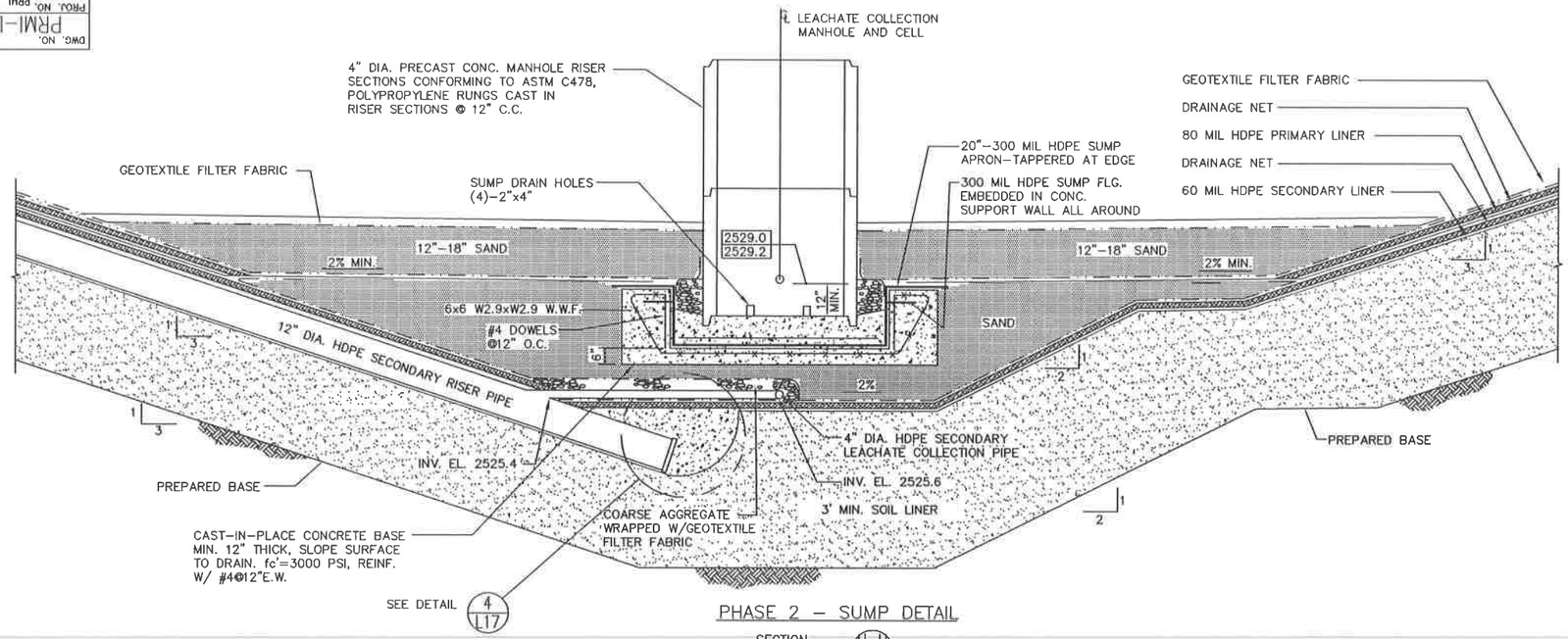

PHASE 2 – SUMP DETAIL

SECTION H-H/L12
SCALE: 3/8"=1'-0"

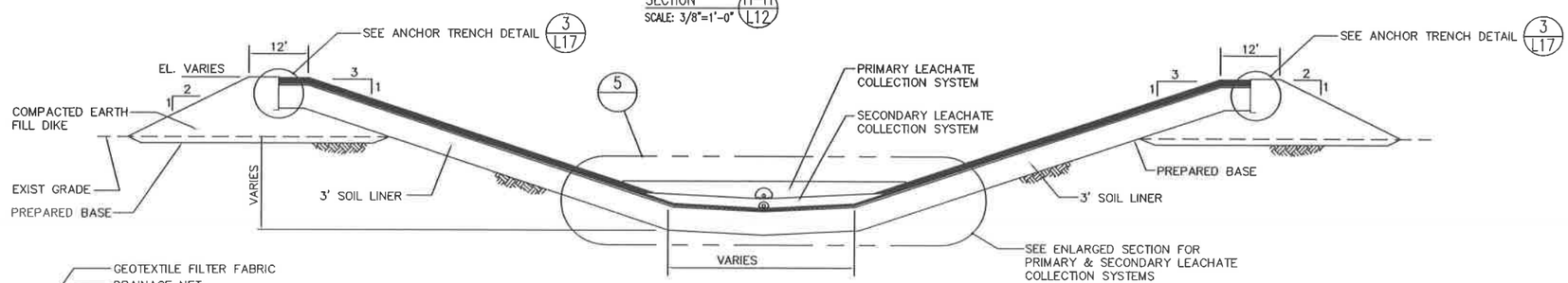

CELL 5 – PHASE 2 – TYPICAL SECTION

SECTION J-J/L12
SCALE: 3/8"=1'-0"

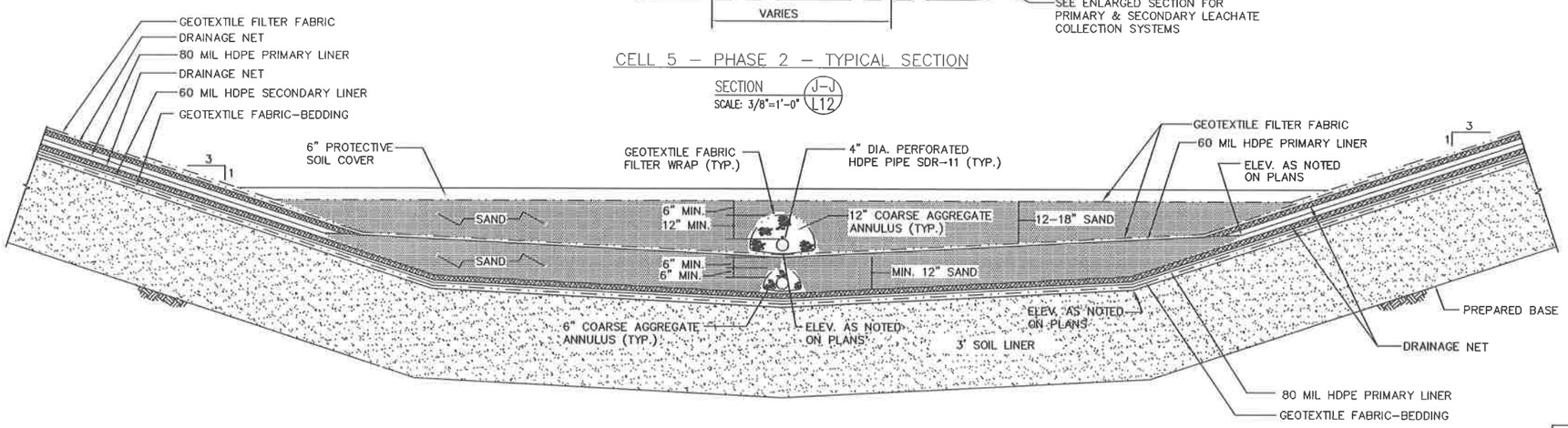

ENLARGED SECTION – PRIMARY & SECONDARY LEACHATE COLLECTION SYSTEMS

DETAIL 5
SCALE: 3/8"=1'-0"

REV.	BY / DATE	CHK'D / DATE	DESCRIPTION	PROJ. ENGR. / DATE	SUPV. ENGR. / DATE
B	BJH / 4/23/99	- / -	2003 PERMIT RENEWAL	- / -	JH / 4/23/99
A	MK / 7/29/98	- / -	ISSUED FOR PART B PERMIT RENEWAL APPLICATION	- / -	- / -

US Ecology Idaho
an American Ecology company

SITE B
GRAND VIEW, IDAHO
US EPA ID NO. IDD 073 114 654

TITLE:
CIVIL
CELL 5 – PHASE II
TYPICAL SECTIONS AND DETAILS

DRAWN BY: MK	DATE 6/10/98	SCALE:	FILE CODE PRMIL18B	REV. NO.
CHECKED	DATE	ENGINEER DATE	DWG. NO. PRMI-L18	B
PROJ. MGR.	DATE	APPROVED DATE	PROJ. NO. PRMI	

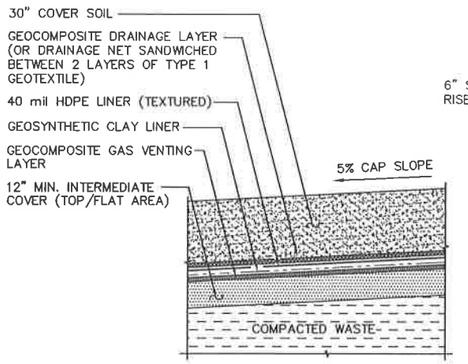

TYPICAL FINAL CLOSURE CAP SYSTEM DETAIL
(TOP/FLAT AREA)

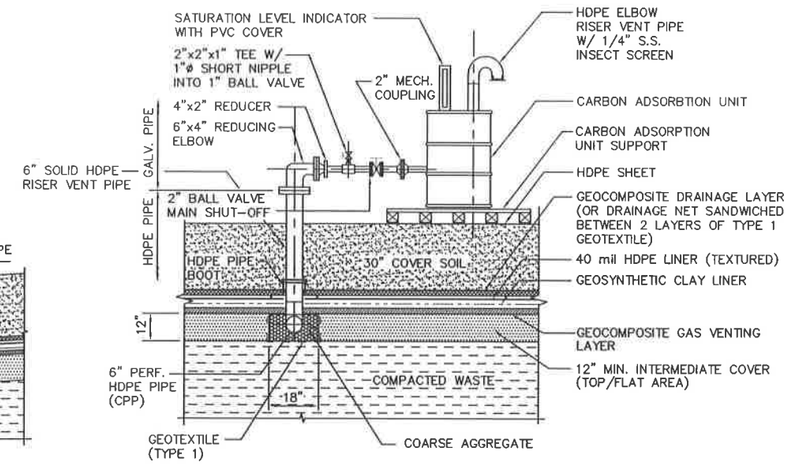

TYPICAL FINAL CLOSURE CAP SYSTEM
GAS VENTING SYSTEM DETAIL

DETAIL 6 L13 L14
SCALE: N.T.S.

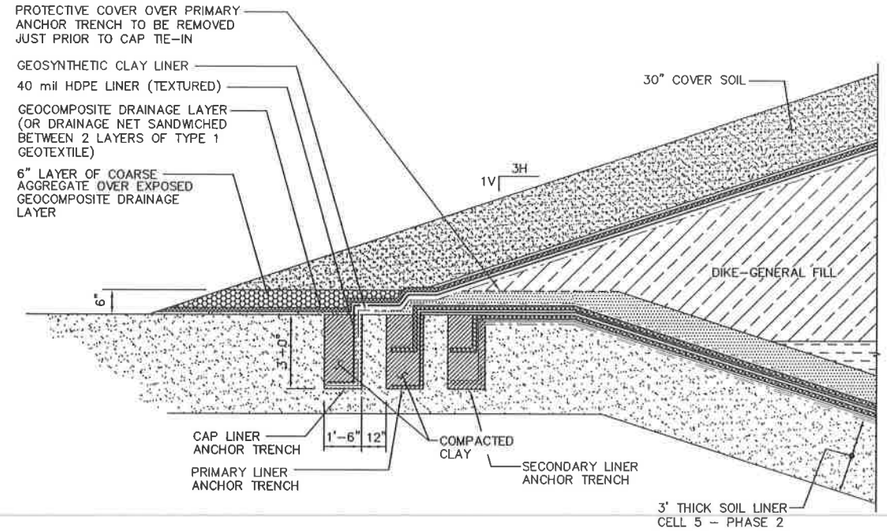

ANCHOR TRENCH AND
FINAL CLOSURE CAP INTERFACE DETAIL

SECTION K-K L14
SCALE: 3/8"=1'-0"

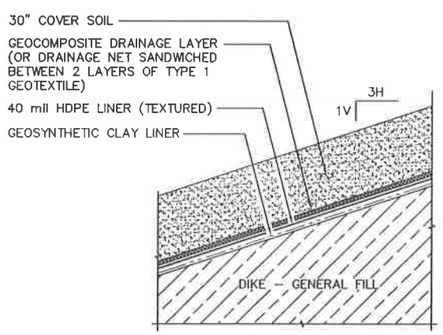

TYPICAL FINAL CLOSURE CAP SYSTEM DETAIL
(3H:1V SIDE SLOPES)

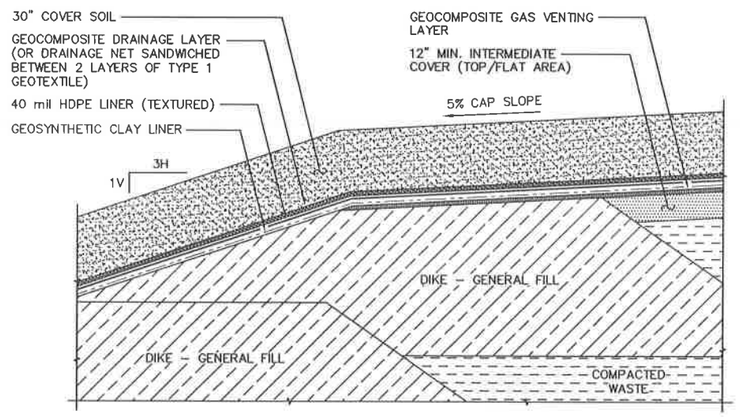

TYPICAL FINAL CLOSURE CAP SYSTEM
(TOP/SIDESLOPE INTERFACE DETAIL

REV.	BY / DATE	CHK'D / DATE	DESCRIPTION	PROJ ENGR / DATE	SUPV ENGR / DATE
B	BJM / 4/21/03	- / -	2003 PERMIT RENEWAL	- / -	JM / 4/21/03
A	MK / 7/29/98	- / -	ISSUED FOR PART B PERMIT RENEWAL APPLICATION	- / -	- / -

USEcology Idaho
an American Ecology company

SITE B
GRAND VIEW, IDAHO
US EPA ID NO. IDD 073 114 654

TITLE:
CIVIL
CELL 5 - FINAL CLOSURE
TYPICAL CAP SYSTEM SECTIONS AND DETAILS

DRAWN BY: MK DATE 7/9/98	SCALE:	FILE CODE PRMIL19B	REV. NO.
CHECKED DATE	ENGINEER DATE	DWG. NO. PRMI-L19	B
PROJ. MGR. DATE	APPROVED DATE	PROJ. NO. PRMI	

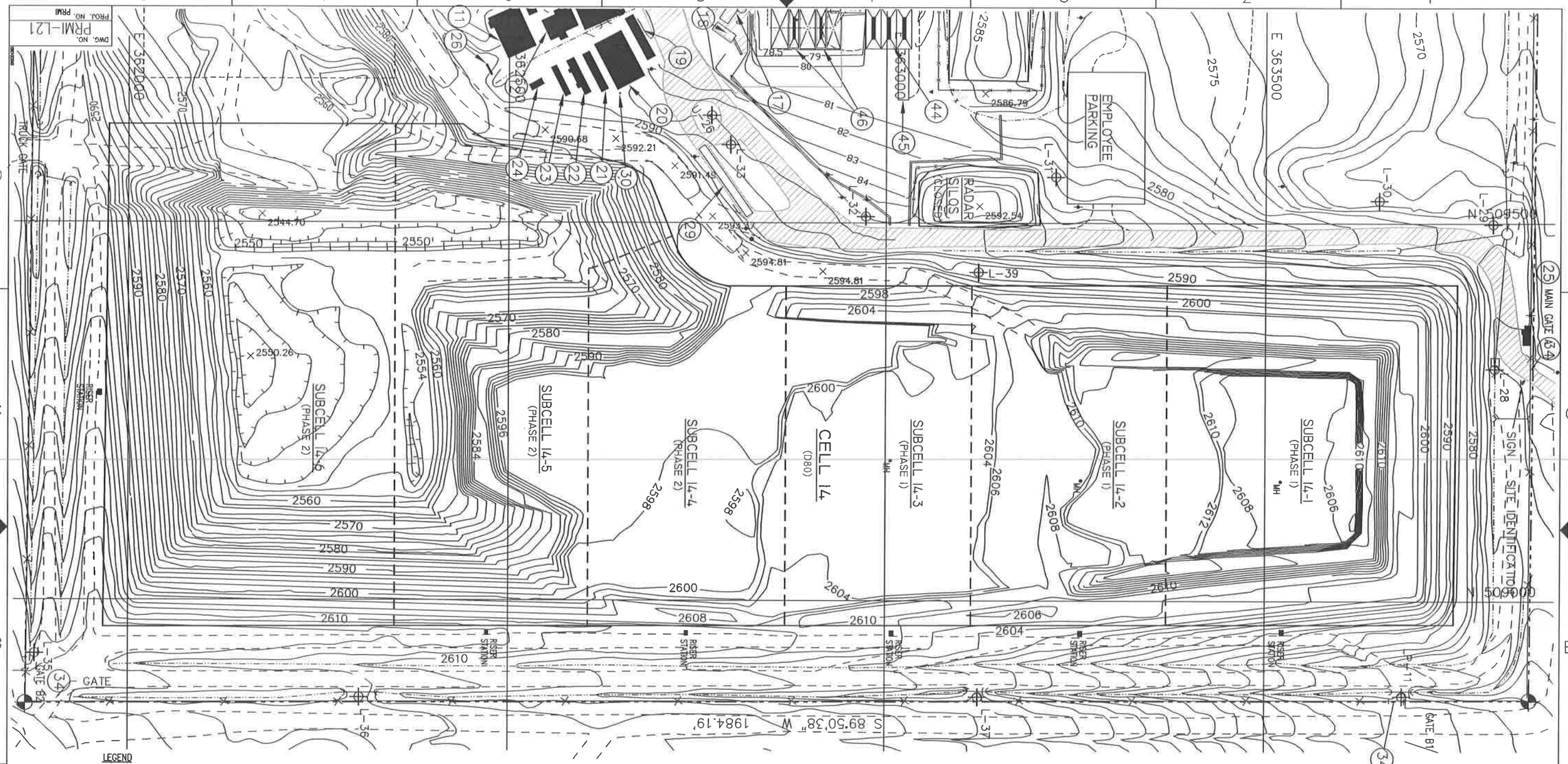

LEGEND

- 5/8" IRON PIN W/ ALUMINUM CAP
- POWER POLE
- 2544.70 — SPOT ELEVATION
- U-14 — WELL
- FENCE LINE
- PROPERTY BOUNDARY
- UNIMPROVED ROAD
- PAVED ROAD
- 2550 — EXISTING TOPOGRAPHY AS OF NOV. 4, 1995
- RCRA UNIT BOUNDARY
- CULVERT
- DRAINAGE
- (34) — FACILITY KEY NUMBER

FACILITY KEY

11	DECONTAMINATION BUILDING
12	LAB OFFICES
17	PUMP HOUSE/WATER STORAGE TANKS
18	COMPRESSED GAS STORAGE AREA
19	TRANSPORTATION BUILDING
20	ADMINISTRATION LUNCH ROOM
21	REGULATORY OFFICE
22	RECORDS STORAGE BUILDING
23	ADMINISTRATION OFFICE NO. 5
24	IDEQ TRAILER
25	SECURITY BUILDING
26	PROPANE TANK
29	TRUCK SCALE
34	EVACUATION GATES
44	CONTAINMENT BUILDING TRUCK UNLOADING APRONS 1,2 AND 3 (S01,T04,T21,T38,T39)
45	CONTAINMENT BUILDING TRUCK UNLOADING RAMP
46	STABILIZATION BUILDING TRUCK UNLOADING APRONS 1 AND 2 (S01,T04,T21,T38,T39)

GENERAL NOTES:

1. EXISTING SITE TOPOGRAPHY, PHYSICAL FEATURES AND DELINEATIONS OBTAINED FROM AERIAL PHOTOGRAPHY AND SURVEYED DATUM PROVIDED TO ENVIROSOURCE TECHNOLOGIES BY: J.J. HOWARD ENGINEERING-SURVEYING; 1675-A HILL ROAD; BOISE, IDAHO 83702. DATE OF ORIGINAL SURVEY - NOVEMBER 4, 1995.
2. ADDITIONALLY THE FOLLOWING AREAS OF THE SITE HAVE BEEN UPDATED AND INCORPORATED INTO THE EXISTING SITE PLAN AS FOLLOWS:
   - A. THE CURRENT TOP OF WASTE ELEVATIONS FOR CELL 5 AS OF JANUARY 2, 1996. SURVEY BY: J.J. HOWARD.
   - B. THE CURRENT TOP OF WASTE ELEVATIONS FOR CELL 14 AS OF DECEMBER 30, 1997. SURVEY BY: J.J. HOWARD.
   - C. UPDATE OF EXISTING SURFACE TOPOGRAPHY NORTH OF SUB-CELL 14-8 AS OF APRIL 27, 1998. SURVEY BY: J.J. HOWARD.
   - D. STABILIZATION AND CONTAINMENT BUILDING UPDATED AS OF JANUARY 14, 1997. SURVEY BY: J.J. HOWARD. DESIGN CONTOURS BY: ENVIROSOURCE TECHNOLOGIES.
   - E. PAD 4 PROCESS PLANT AREA UPDATED AS OF APRIL 15, 1998. SURVEY BY: J.J. HOWARD.
3. AN ADDITIONAL 1,000 FEET TO THE NORTH OF SECTION 19 HAS BEEN SURVEYED AND INCORPORATED INTO THE EXISTING TOPOGRAPHY. SURVEY BY: J.J. HOWARD DATED FEBRUARY 20, 1998.

N — 21.8° MAGNETIC NORTH

60' 40' 20' 0' 60' 120'

REV.	BY / DATE	CHK'D / DATE	DESCRIPTION	PROJ ENGR / DATE	SUPV ENGR / DATE
B	MM / 4/23/03	- / -	2003 PERMIT RENEWAL	- / -	JH / 4/23/03
A	RK / 1/28/98	- / -	ISSUED FOR PART B PERMIT RENEWAL APPLICATION	- / -	- / -

USEcology Idaho
an American Ecology company

SITE B
GRAND VIEW, IDAHO
US EPA ID NO. IDD 073 114 654

TITLE:
CIVIL
CELL 14
TYPICAL SITE PLAN

DRAWN BY: MK DATE 6/04/98	SCALE:	FILE CODE PRMIL21B	REV. NO. B
CHECKED DATE	ENGINEER DATE	DWG. NO. PRMI-L21	
PROJ. MGR. DATE	APPROVED DATE	PROJ. NO. PRMI	

DWG. NO. PRMI-L21
PROJ. NO. PRMI

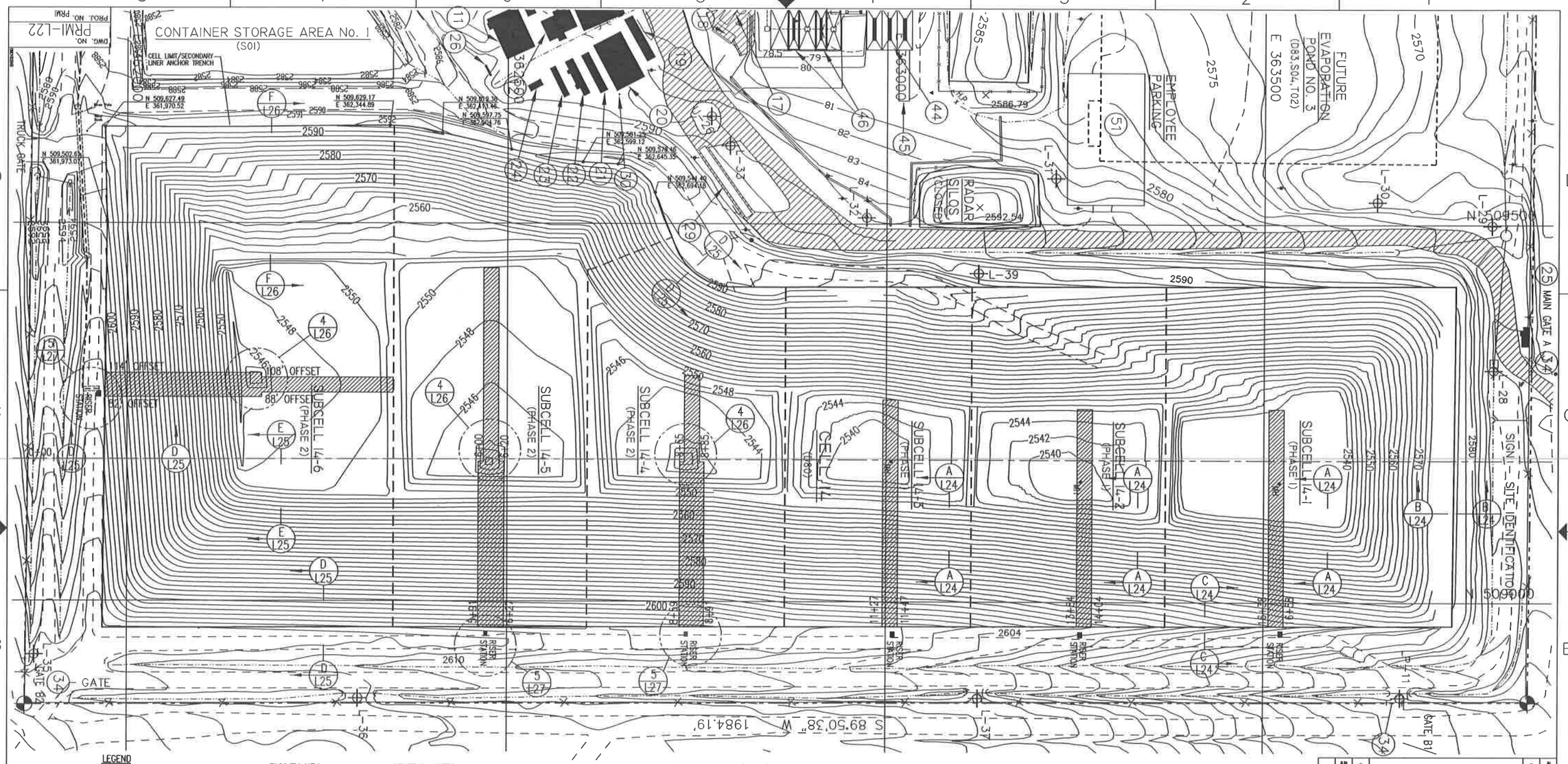

LEGEND

- 5/8" IRON PIN W/ ALUMINUM CAP
- POWER POLE
- 2544.70 SPOT ELEVATION
- U-14 WELL
- FENCE LINE
- PROPERTY BOUNDARY
- UNIMPROVED ROAD
- PAVED ROAD
- 2550 EXISTING TOPOGRAPHY
- RCRA UNIT BOUNDARY
- CULVERT
- DRAINAGE
- (34) FACILITY KEY NUMBER
- LEACHATE PIPE W/SLEEVE
- DENOTES AREA WHERE MACROENCAPSULATION IS RESTRICTED FROM PLACEMENT

FACILITY KEY

11	DECONTAMINATION BUILDING
12	LAB OFFICES
17	PUMP HOUSE/WATER STORAGE TANKS
18	COMPRESSED GAS STORAGE AREA
19	TRANSPORTATION BUILDING
20	ADMINISTRATION LUNCH ROOM
21	REGULATORY OFFICE
22	RECORDS STORAGE BUILDING
23	ADMINISTRATION OFFICE NO. 5
24	IDEQ TRAILER
25	SECURITY BUILDING
26	PROPANE TANK
29	TRUCK SCALE
34	EVACUATION GATES
44	CONTAINMENT BUILDING TRUCK UNLOADING APRONS 1,2 AND 3 (S01,T04,T21,T38,T39)
45	CONTAINMENT BUILDING TRUCK UNLOADING RAMP
46	STABILIZATION BUILDING TRUCK UNLOADING APRONS 1 AND 2 (S01,T04,T21,T38,T39)

GENERAL NOTES:

1. EXISTING SITE TOPOGRAPHY, PHYSICAL FEATURES AND DELINEATIONS OBTAINED FROM AERIAL PHOTOGRAPHY AND SURVEYED DATUM PROVIDED TO ENVIROSOURCE TECHNOLOGIES BY: J.J. HOWARD ENGINEERING-SURVEYING; 1675-A HILL ROAD; BOISE, IDAHO 83702. DATE OF ORIGINAL SURVEY – NOVEMBER 4, 1995.
2. ADDITIONALLY THE FOLLOWING AREAS OF THE SITE HAVE BEEN UPDATED AND INCORPORATED INTO THE EXISTING SITE PLAN AS FOLLOWS:
   - A. AN ADDITIONAL 1,000 FEET TO THE NORTH OF SECTION 19 HAS BEEN SURVEYED AND INCORPORATED INTO THE EXISTING TOPOGRAPHY. SURVEY BY: J.J. HOWARD DATED FEBRUARY 20, 1998.
   - B. STABILIZATION AND CONTAINMENT BUILDING UPDATED AS OF JANUARY 14, 1997. SURVEY BY: J.J. HOWARD. DESIGN CONTOURS BY: ENVIROSOURCE TECHNOLOGIES.
   - C. PAD 4 PROCESS PLANT AREA UPDATED AS OF APRIL 15, 1998. SURVEY BY: J.J. HOWARD.
   - D. LEACHATE FORCE MAIN AND SOIL STOCKPILE SURVEY UPDATED AS OF FEBRUARY 15, 1999. SURVEY BY: J.J. HOWARD.
   - E. THE CURRENT TOP OF WASTE ELEVATIONS FOR CELL 5 AS OF JANUARY 2, 1996. SURVEY BY: J.J. HOWARD.
   - F. THE CURRENT TOP OF WASTE ELEVATIONS FOR CELL 14 AS OF JANUARY 04, 2001. SURVEY BY: J.J. HOWARD.
   - G. TOPOGRAPHY OF TRENCHES 10 AND 11 UPDATED AS OF SEPTEMBER 12, 2000. SURVEY BY: J.J. HOWARD.
   - H. UPDATE OF CONTAINER STORAGE AREA NO. 1 TOPOGRAPHY AS OF JUNE 18, 1999. SURVEY BY: J.J. HOWARD.
   - I. BORROW AREA TOPOGRAPHY UPDATED AS OF DECEMBER 12, 2000. SURVEY BY: J.J. HOWARD.

GENERAL NOTES: (CONT.)

- J. WEST HAUL ROAD TOPOGRAPHY UPDATED AS OF DECEMBER 05, 2000. SURVEY BY: J.J. HOWARD.
- K. ET CAP TEST PAD TOPOGRAPHY UPDATED AS OF NOVEMBER 06, 2000. SURVEY BY: J.J. HOWARD.

N 21.0 MAGNETIC NORTH

60' 40' 20' 0' 60' 120'

REV.	BY / DATE	CHK'D / DATE	DESCRIPTION	PROJ ENGR / DATE	SUPV ENGR / DATE
C	RJM / 4/23/03	- / -	2003 PERMIT RENEWAL	- / -	AH / 4/23/03
B	MK / 4/2/01	- / -	ISSUED IN RESPONSE TO NOD LETTER DATED JUNE 30, 1999	- / -	MRB / 4/2/01
A	MK / 7/28/98		ISSUED FOR PART B PERMIT RENEWAL APPLICATION		

USEcology Idaho
an American Ecology company

SITE B
GRAND VIEW, IDAHO
US EPA ID NO. IDD 073 114 654

TITLE:
CIVIL
CELL 14
TYPICAL SECONDARY LINER PLAN

DRAWN BY: MK DATE 6/04/98	SCALE:	FILE CODE PRMIL22C	REV. NO. C
CHECKED DATE	ENGINEER DATE	DWG. NO. PRMI-L22	
PROJ. MGR. DATE	APPROVED DATE	PROJ. NO. PRMI	

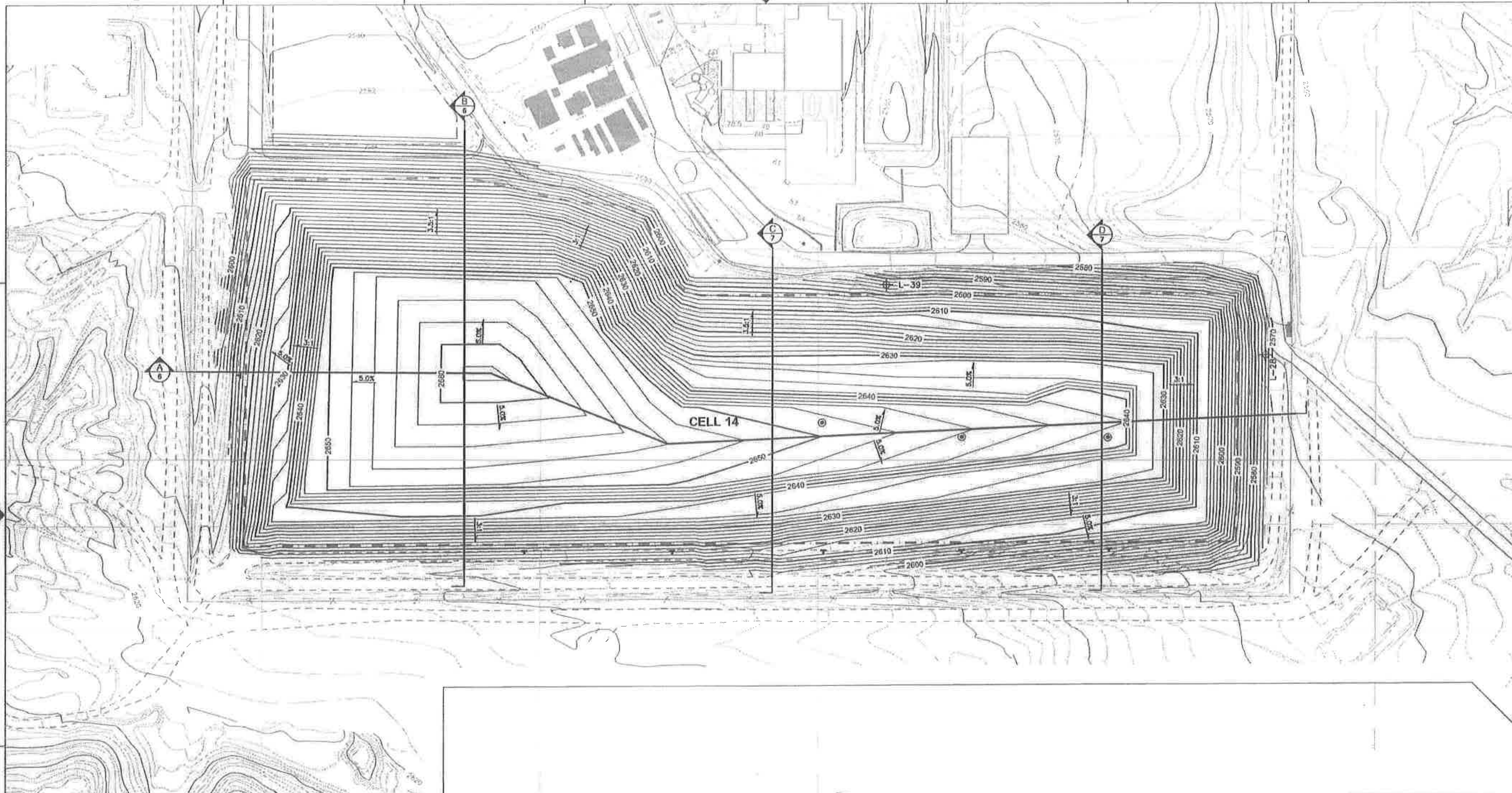

NOTES: CONTOUR INTERVAL 2-FEET

CONTOURS ARE FEET ABOVE MEAN SEA LEVEL

— · — LIMITS OF LINED CELL

Explanation

▼	Leachate riser and piping
◉	Leachate riser manhole

NOT FOR CONSTRUCTION

REV.	BY / DATE	CHK'D / DATE	DESCRIPTION	DATE	DATE

USEcology Idaho

an American Ecology company

Daniel B. Stephens & Associates, Inc.
ENVIRONMENTAL SCIENTISTS & ENGINEERS

SITE B
GRAND VIEW, IDAHO
US EPA ID NO. IDD 073 114 654

TITLE: CIVIL
CELL 14 – FINAL CLOSURE
FINAL COVER GRADING PLAN

DRAWN BY: KOB DATE 10/25/10	SCALE: AS NOTED	FILE CODE ES07_0130_070	REV. NO.
CHECKED M. Miller DATE 10/25/10	ENGINEER R.E.Pease DATE 10/25/10	DWG. NO. SHEET 5 of 9	3
PROJ. MGR. J. Kelsey DATE 10/25/10	APPROVED DATE	PROJ. NO. ES07.0130	

Ronald Eric Pease 10/25/2010

B	MK 4/2/01		ISSUED IN RESPONSE TO NOD LETTER DATED JUNE 30, 1999		MRS 4/2/01

ISSUED FOR PART B PERMIT RENEWAL APPLICATION

REV.	BY DATE	CHK'D DATE	DESCRIPTION	PROJ ENGR DATE	SUPV ENGR DATE

USEcology Idaho

an American Ecology company

SITE B
GRAND VIEW, IDAHO
US EPA ID NO. IDD 073 114 654

TITLE:
CIVIL
CELL 14
TYPICAL FINAL GRADING PLAN

DRAWN BY: MK DATE 6/04/98	SCALE: 1"=60'	FILE CODE PRMIL23B		REV. NO.
CHECKED DATE	ENGINEER DATE	DWG. NO. PRMI-L23		B
PROJ. MGR. DATE	APPROVED DATE	PROJ. NO. PRMI		

DWG. NO. PRMI-L23
PROJ. NO. PRMI

DWG. NO. PRMI-L24
PROJ. NO. PRMI

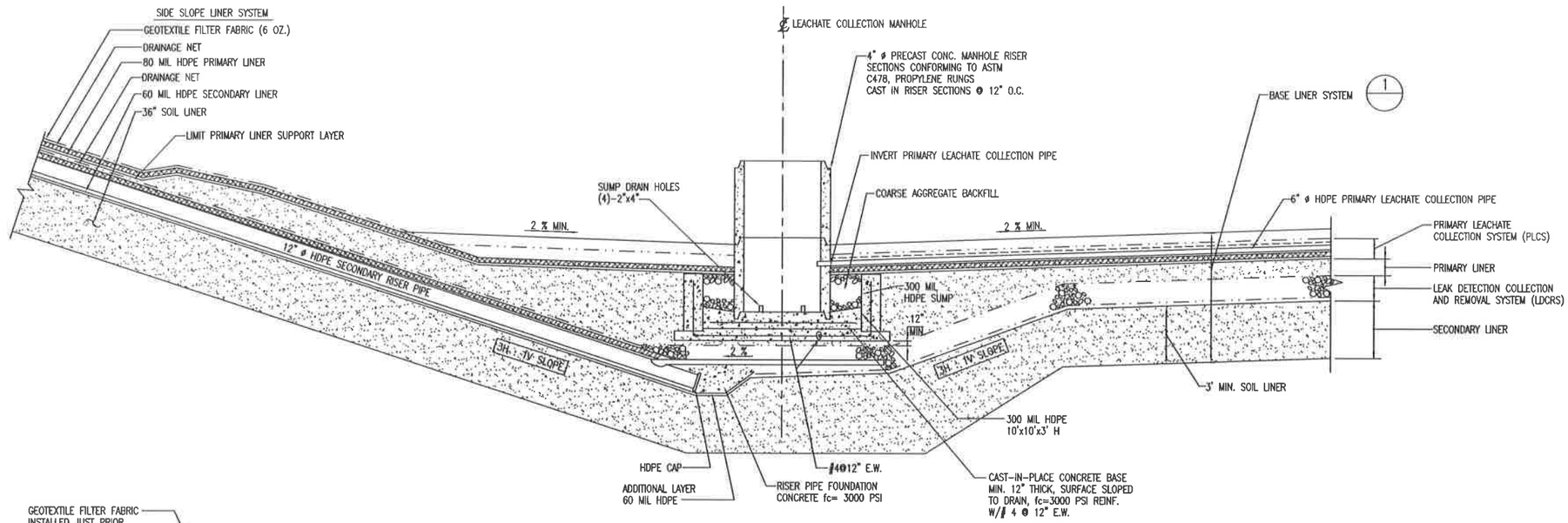

TYPICAL SECTION THROUGH SUMP

SECTION A–A / L22
SCALE: N.T.S.

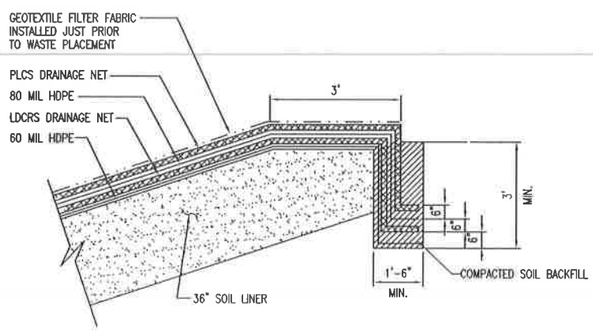

ANCHOR TRENCH DETAIL

SECTION B–B / L22
SCALE: N.T.S.

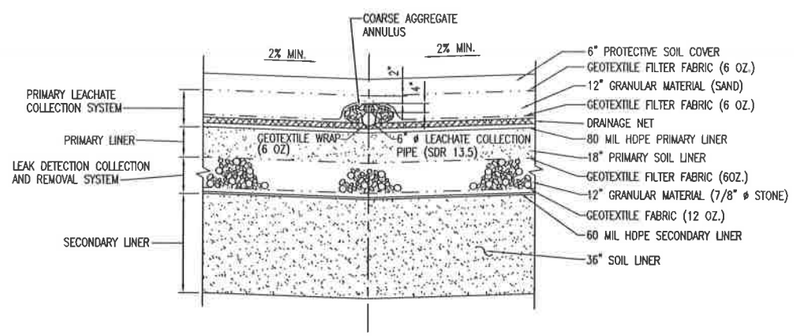

BASE LINER SYSTEM

DETAIL 1
SCALE: N.T.S.

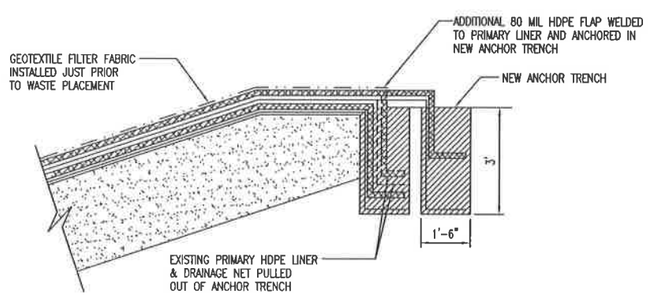

MODIFICATIONS TO SOUTH ANCHOR TRENCH

SECTION C–C / L22
SCALE: N.T.S.

REV.	BY / DATE	CHK'D / DATE	DESCRIPTION	PROJ. ENGR / DATE	SUPV. ENGR / DATE
B	RJM / 4/23/03	- / -	2003 PERMIT RENEWAL	- / -	JH / 4/23/03
A	GMH / 7/28/98	- / -	ISSUED FOR PART B PERMIT RENEWAL APPLICATION	- / -	- / -

USEcology Idaho
an American Ecology company

SITE B
GRAND VIEW, IDAHO
US EPA ID NO. IDD 073 114 654

TITLE:
CIVIL
CELL 14 – PHASE 1
TYPICAL SECTION AND DETAILS

DRAWN BY: GMH	DATE 4/22/98	SCALE:	FILE CODE PRMIL24B	REV. NO.
CHECKED	DATE	ENGINEER DATE	DWG. NO. PRMI–L24	B
PROJ. MGR.	DATE	APPROVED DATE	PROJ. NO. PRMI	

DWG. NO. PRMI-L25
PROJ. NO. PRMI

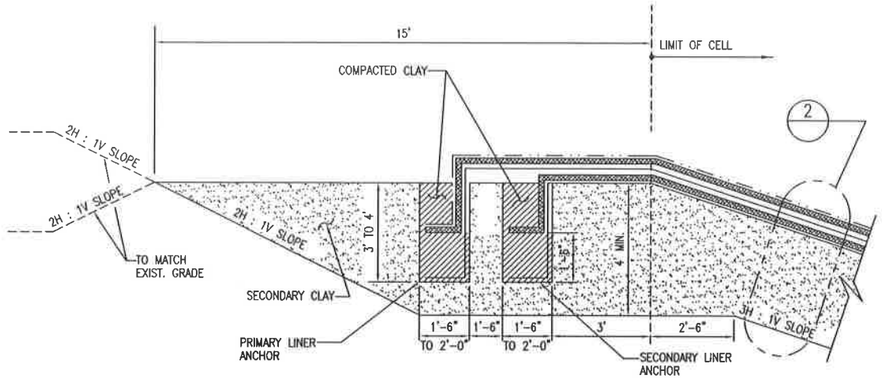

NOTE: WIDTH OF BOTH ANCHOR TRENCHES INCREASED TO 2'-0" 25' BEFORE AND AFTER RADIUS.

TYPICAL ANCHOR TRENCH DETAIL

SECTION D-D L22
SCALE: N.T.S.

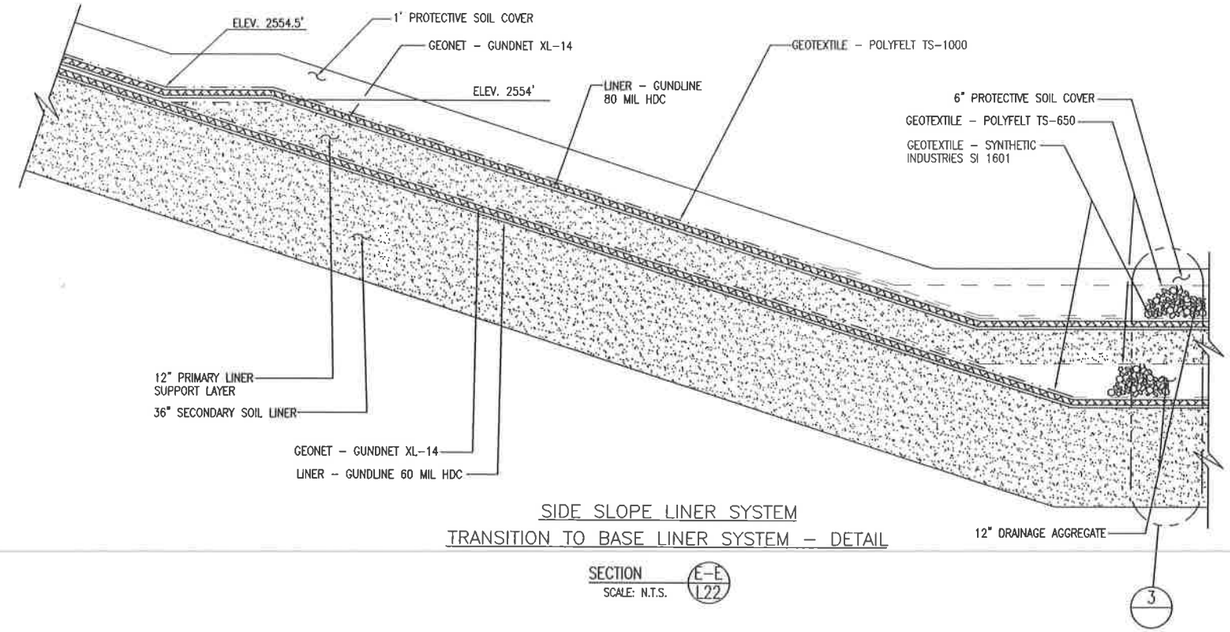

SIDE SLOPE LINER SYSTEM
TRANSITION TO BASE LINER SYSTEM - DETAIL

SECTION E-E L22
SCALE: N.T.S.

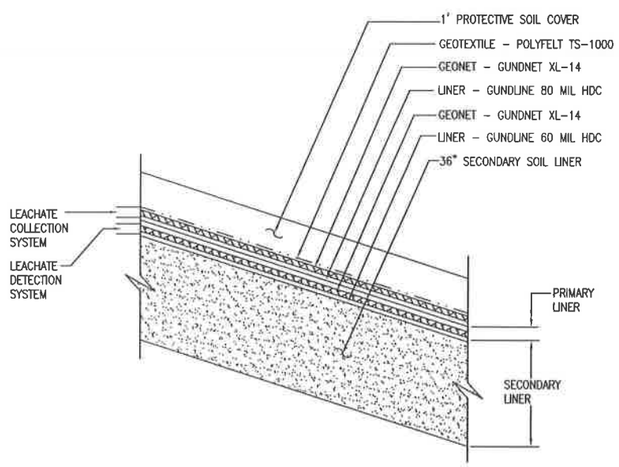

TYPICAL SIDE SLOPE LINER SYSTEM - DETAIL

DETAIL 2
SCALE: N.T.S.

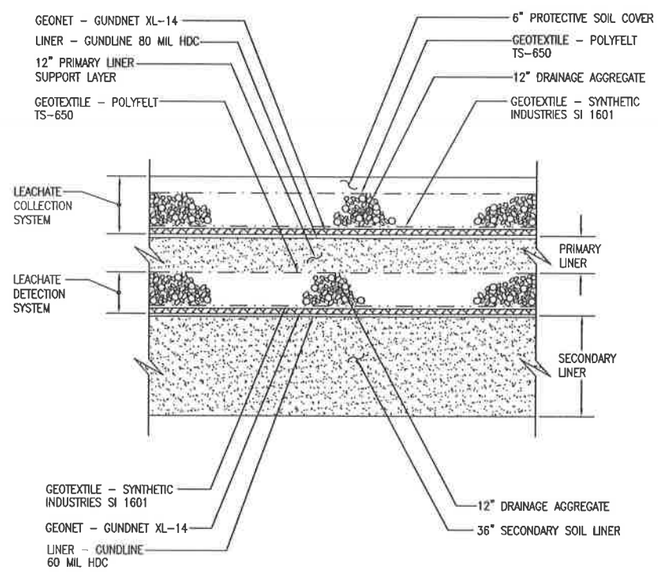

TYPICAL BASE LINER SYSTEM - DETAIL

DETAIL 3
SCALE: N.T.S.

REV.	BY / DATE	CHK'D / DATE	DESCRIPTION	PROJ. ENGR. / DATE	SUPV. ENGR. / DATE
B	RJM / 4/23/03	- / -		- / -	JH / 4/23/03
A	BJH / 7/28/98	- / -	ISSUED FOR PART B PERMIT RENEWAL APPLICATION	- / -	- / -

US Ecology Idaho
an American Ecology company

SITE B
GRAND VIEW, IDAHO
US EPA ID NO. IDD 073 114 654

TITLE:
CIVIL
CELL 14 - PHASE 2
TYPICAL SECTIONS AND DETAILS

DRAWN BY: EMH DATE 4/21/98	SCALE:	FILE CODE PRMIL25B	REV. NO.
CHECKED DATE	ENGINEER DATE	DWG. NO. PRMI-L25	B
PROJ. MGR. DATE	APPROVED DATE	PROJ. NO. PRMI	

DWG. NO. PRMI-L26
PROJ. NO. PRMI

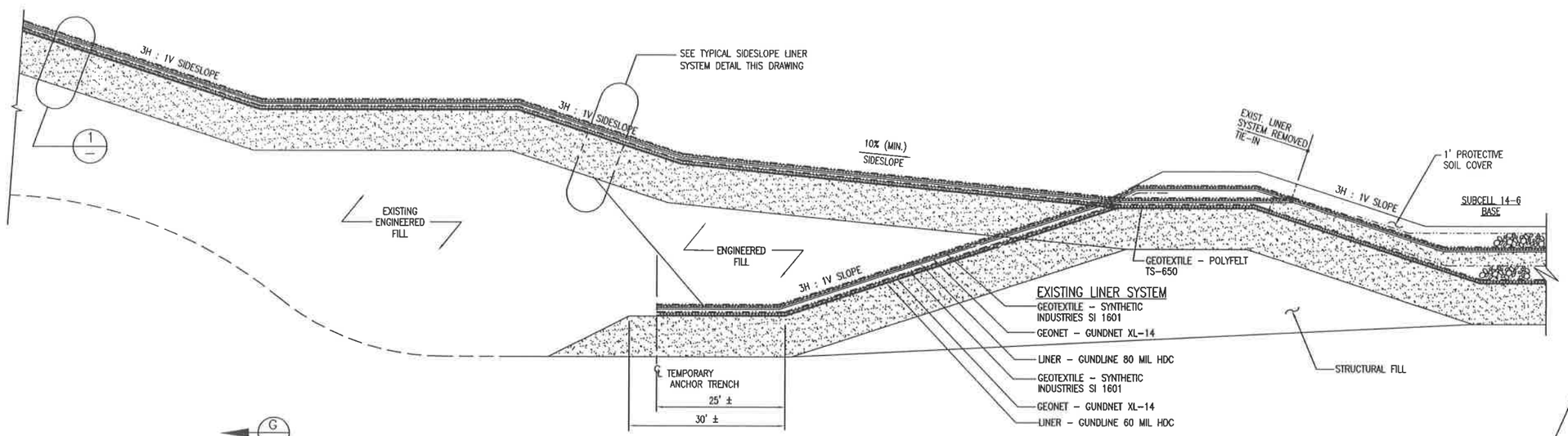

AS-BUILT TIE-IN AT NORTH WALL TERMINATION

SECTION F-F / L22
SCALE: N.T.S.

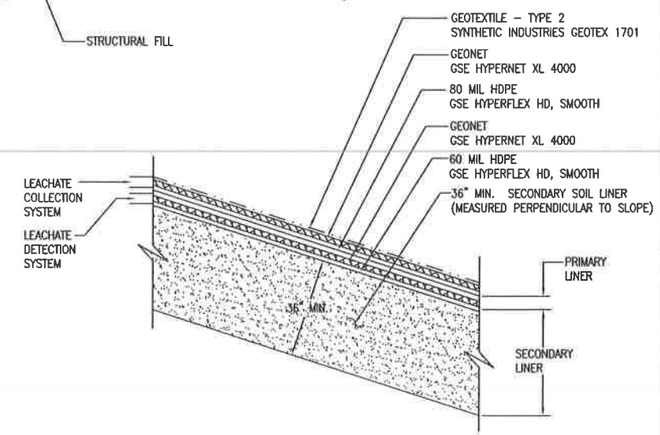

TYPICAL SIDESLOPE LINER SYSTEM DETAIL

SCALE: N.T.S.

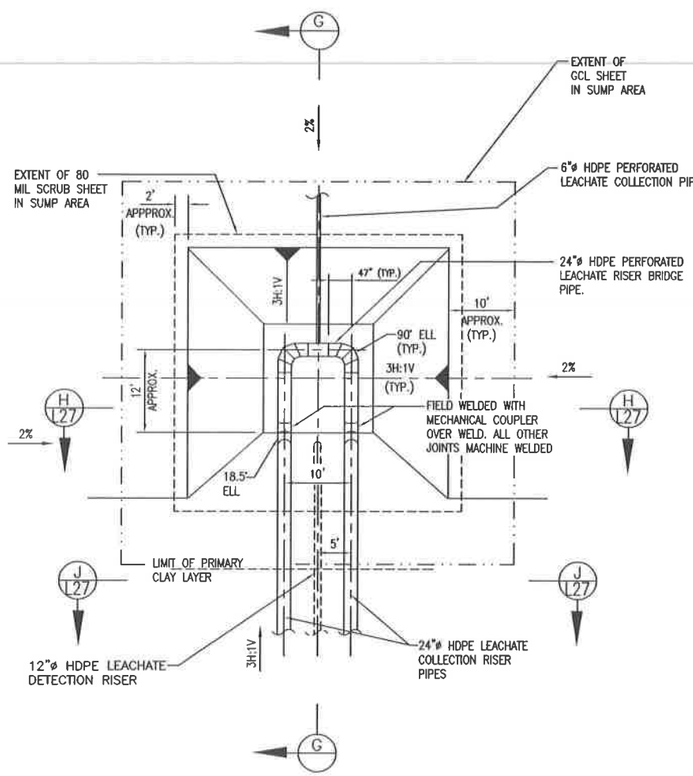

TYPICAL PRIMARY LEACHATE COLLECTION SUMP PLAN

DETAIL 4 / L22
SCALE: N.T.S.

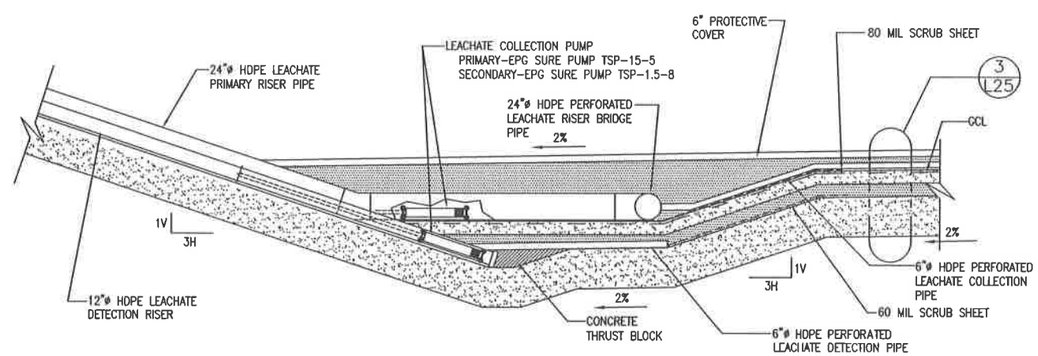

TYPICAL SUMP FOR SUBCELLS 14-4, 14-5 & 14-6

SECTION G-G
SCALE: N.T.S.

REV.	BY / DATE	CHK'D / DATE	DESCRIPTION	PROJ ENGR / DATE	SUPV ENGR / DATE
C	AM 4/23/03	- -	2003 PERMIT RENEWAL	- -	JH 4/23/03
B	MK 4/2/01	- -	ISSUED IN RESPONSE TO NOD LETTER DATED JUNE 30, 1999	- -	MRS 4/2/01
A	DIH 7/28/98	- -	ISSUED FOR PART B PERMIT RENEWAL APPLICATION	- -	- -

USEcology Idaho
an American Ecology company

SITE B
GRAND VIEW, IDAHO
US EPA ID NO. IDD 073 114 654

TITLE: CIVIL
CELL 14 - PHASE 2
TYPICAL SECTIONS AND DETAILS

DRAWN BY: EMH	DATE 4/21/98	SCALE:	FILE CODE PRMIL26C	REV. NO.
CHECKED	DATE	ENGINEER DATE	DWG. NO. PRMI-L26	C
PROJ. MGR.	DATE	APPROVED DATE	PROJ. NO. PRMI	

DWG. NO. PRMI-L27
PROJ. NO. PRMI

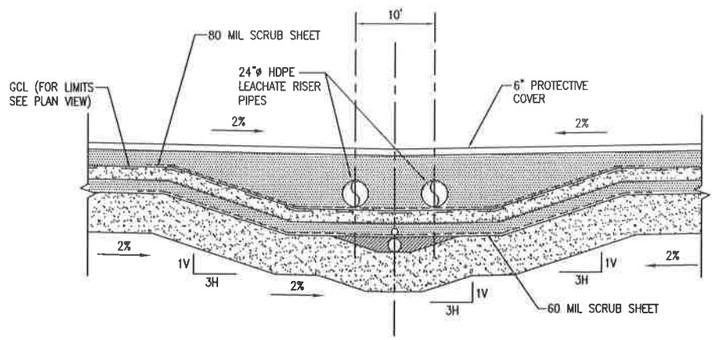

SECTION H-H L26
SCALE: N.T.S.

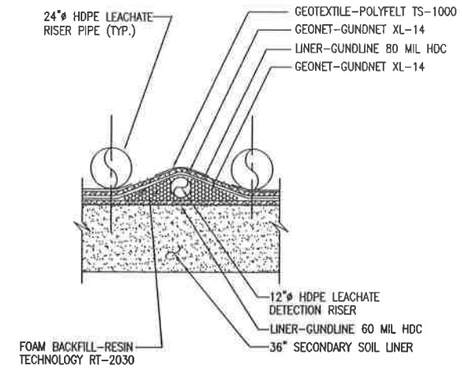

TYPICAL FOR SLOPE FROM
START OF PRIMARY SUPPORT LAYER TO BASE

SECTION J-J L26
SCALE: N.T.S.

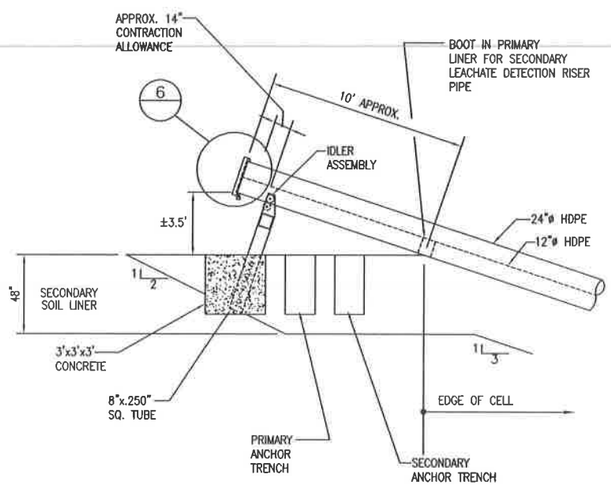

DETAIL 5 L22
SCALE: N.T.S.

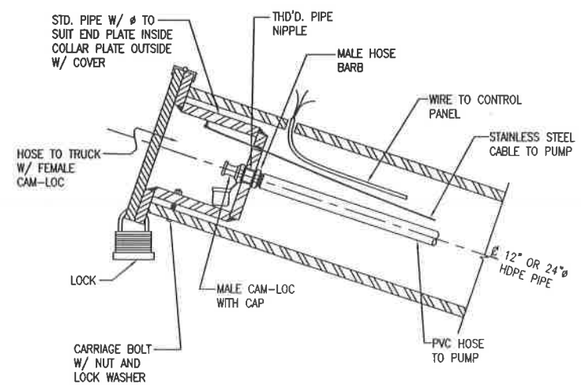

DETAIL 6
SCALE: N.T.S.

REV.	BY / DATE	CHK'D / DATE	DESCRIPTION	PROJ. ENGR. / DATE	SUPV. ENGR. / DATE
B	RJH / 4/23/03	- / -	2003 PERMIT RENEWAL	- / -	JH / 4/23/03
A	DIH / 7/28/98	- / -	ISSUED FOR PART B PERMIT RENEWAL APPLICATION	- / -	- / -

USEcology Idaho
an American Ecology company

SITE B
GRAND VIEW, IDAHO
US EPA ID NO. IDD 073 114 654

TITLE:
CIVIL
CELL 14 – PHASE 2
TYPICAL SECTIONS AND DETAILS

DRAWN BY: EMH DATE 4/21/03	SCALE:	FILE CODE PRMIL27B	REV. NO.
CHECKED DATE	ENGINEER DATE	DWG. NO. PRMI–L27	B
PROJ. MGR. DATE	APPROVED DATE	PROJ. NO. PRMI	

52-00-00

LIST OF DRAWINGS

DRAWING NUMBER	DRAWING TITLE
52-00-00	DRAWING INDEX AND PROJECT LOCATION MAP
52-01-01	SITE PLAN/CELL LAYOUT
52-01-02	CELL CONSTRUCTION PHASING AND WASTE LIMIT
52-01-03	SECTIONS AND DETAILS – SHEET 1
52-01-04	SECTIONS AND DETAILS – SHEET 2
52-01-05	SECTIONS AND DETAILS – SHEET 3
~~52-01-06~~	~~FINAL COVER GRADING PLAN~~
~~52-01-07~~	~~FINAL COVER SECTIONS AND DETAILS 1~~
~~52-01-08~~	~~FINAL COVER SECTIONS AND DETAILS 2~~
~~52-01-09~~	~~SITE DRAINAGE – EXISTING CONDITIONS AND INTERIM PHASE~~
~~52-01-10~~	~~SITE DRAINAGE – FINAL COVER~~

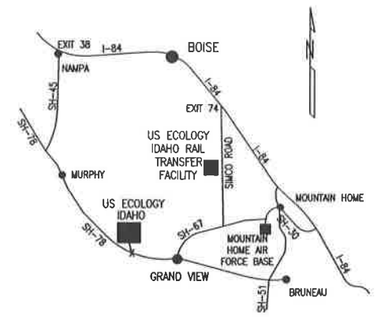

PROJECT LOCATION MAP

NOT TO SCALE

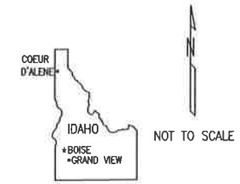

NOT TO SCALE

GENERAL NOTES:

1. EXISTING SITE TOPOGRAPHY, PHYSICAL FEATURES AND DELINEATIONS OBTAINED FROM AERIAL PHOTOGRAPHY AND SURVEYED DATUM PROVIDED TO ENVIROSOURCE TECHNOLOGIES BY: J.J. HOWARD ENGINEERING–SURVEYING; 1675–A HILL ROAD; BOISE, IDAHO 83702. DATE OF ORIGINAL SURVEY – NOVEMBER 4, 1995. SURVEY ELEVATIONS AND COORDINATES ARE SITE SPECIFIC AND ARE WITHOUT A STANDARD OFFSET DATUM.

2. ADDITIONALLY THE FOLLOWING AREAS OF THE SITE HAVE BEEN UPDATED AND INCORPORATED INTO THE EXISTING SITE PLAN AS FOLLOWS:

A. AN ADDITIONAL 1,000 FEET TO THE NORTH OF SECTION 19 HAS BEEN SURVEYED AND INCORPORATED INTO THE EXISTING TOPOGRAPHY. SURVEY BY: J.J. HOWARD DATED FEBRUARY 20, 1998.

B. CONTAINMENT BUILDING UPDATED AS OF JANUARY 14, 1997. SURVEY BY: J.J. HOWARD. DESIGN CONTOURS BY: ENVIROSOURCE TECHNOLOGIES.

C. PAD 4 PROCESS PLANT AREA UPDATED AS OF APRIL 15, 1998. SURVEY BY: J.J. HOWARD.

D. LEACHATE FORCE MAIN AND SOIL STOCKPILE SURVEY UPDATED AS OF FEBRUARY 15, 1999. SURVEY BY: J.J. HOWARD.

E. TOP OF WASTE ELEVATIONS FOR CELL 5 AS OF JANUARY 2, 1996. SURVEY BY: J.J. HOWARD.

F. TOP OF WASTE ELEVATIONS FOR CELL 14 AS OF DECEMBER 30, 1997. SURVEY BY: J.J. HOWARD.

G. TOPOGRAPHY OF TRENCHES 10 AND 11 UPDATED AS OF SEPTEMBER 12, 2000. SURVEY BY: J.J. HOWARD.

H. CONTAINER STORAGE AREA NO. 1 TOPOGRAPHY UPDATED AS OF JUNE 18, 1999. SURVEY BY: J.J. HOWARD.

I. BORROW AREA TOPOGRAPHY UPDATED AS OF DECEMBER 12, 2000. SURVEY BY: J.J. HOWARD.

J. WEST HAUL ROAD TOPOGRAPHY UPDATED AS OF DECEMBER 5, 2000. SURVEY BY: J.J. HOWARD.

K. ET CAP TEST PAD TOPOGRAPHY UPDATED AS OF NOVEMBER 6, 2000. SURVEY BY: J.J. HOWARD.

LEGEND

	CUT
	FILL
	5/8" IRON PIN W/ ALUMINUM CAP
	POWER POLE
U–14	WELL
	FENCE LINE
	PROPERTY BOUNDARY
	UNIMPROVED ROAD
2550	EXISTING TOPOGRAPHY WITH EXCEPTIONS AS SHOWN IN GENERAL NOTES
	CULVERT
	DRAINAGE CHANNEL
	DOUBLE CONTAINED PIPE
2544.70	SPOT ELEVATION
	WASTE LIMIT BOUNDARY
	~~GAS VENTING SYSTEM~~

REV	DATE	DESCRIPTION	PE	DEPT MGR
0		ISSUE FOR CONSTRUCTION		

NOTES

REFERENCE DRAWINGS

DRAWING NO.	DRAWING TITLE

US Ecology Idaho

an American Ecology company

GRAND VIEW FACILITY
LANDFILL CELL 15

DRAWING INDEX AND PROJECT LOCATION MAP

Washington

DRAWN BY	CHECKED BY	WORK ORDER NUMBER	
L. HAYS		25124	
DESIGNED BY	ENG MGR APPR	DRAWING NUMBER	REV
R. HANSEN		52–00–00	0

FILE NAME: W025124\52000D.DWG

PLOT DATE: 11/15/02

WASHINGTON GROUP INTERNATIONAL

52-01-01

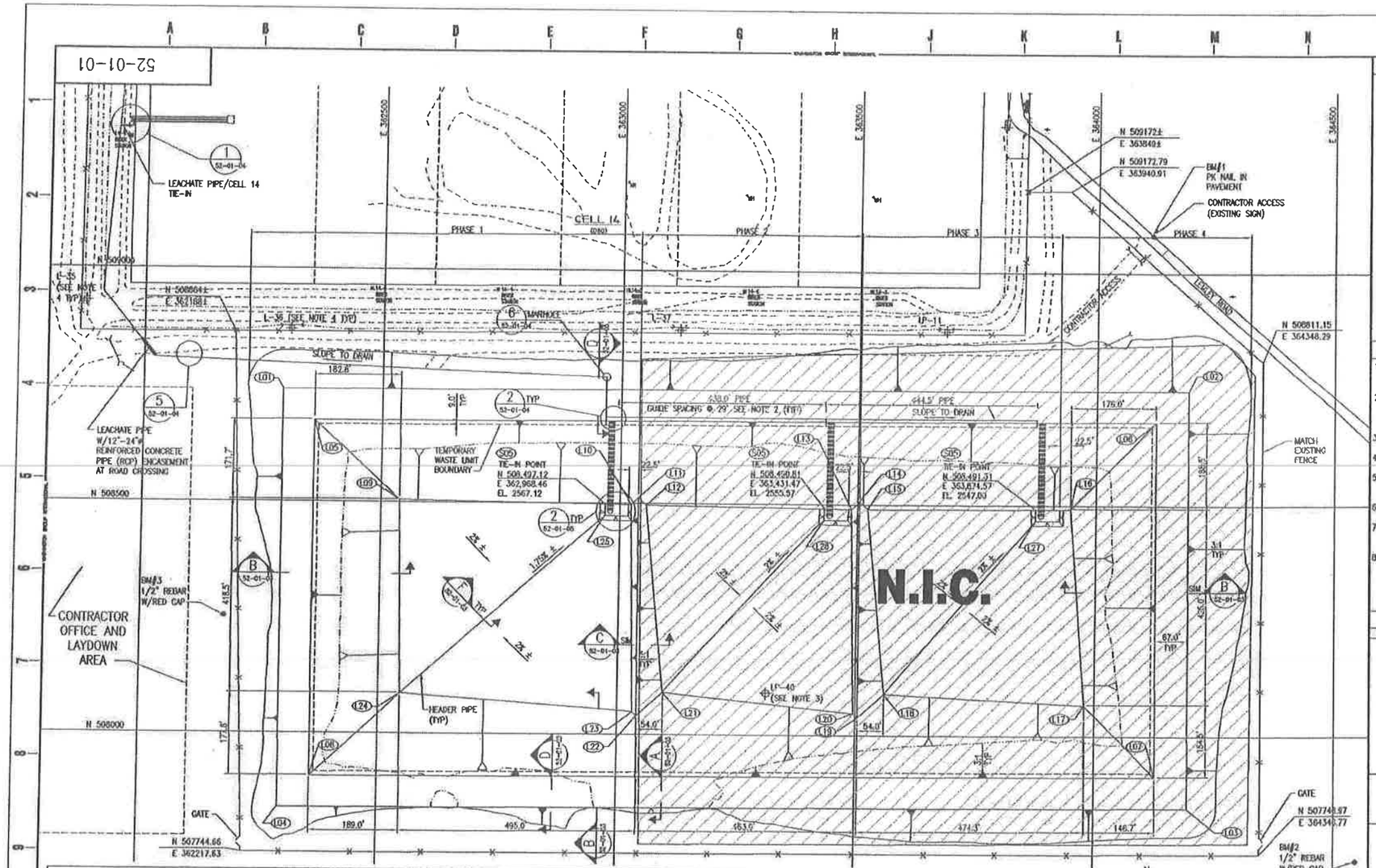

REV	DATE	DESCRIPTION	PE	DEPT USE
0		ISSUE FOR CONSTRUCTION		

NOTES

1. CELL 15 ELEVATIONS SHOWN ARE TOP OF LCRS GEOMEMBRANE AS SHOWN IN SECTION B, DRAWING 52-01-03, EXCEPT AS NOTED IN TABLE 1.
2. CONTRACTOR TO ADD 3" (NOMINAL) SLACK IN THE PIPE BETWEEN GUIDES TO ALLOW FOR EXPANSION AND CONTRACTION. SEE GUIDE DETAIL 4 ON DWG 52-01-04.
3. WELL LP-40 TO BE ABANDONED PRIOR TO EXCAVATION BY OTHERS.
4. RETAIN AND PROTECT WELLS L-35, L-36, L-37 AND LP-11.
5. FENCING LOCATION IS THE APPROXIMATE LOCATION. FENCE LOCATION AND THE TYPE TO BE FINALIZED BY U.S. ECOLOGY.
6. CONSTRUCTION PHASING AND WASTE LIMITS ARE SHOWN ON DRAWING 52-01-02.
7. CONTRACTOR TO CONSTRUCT A LOW-PERMEABILITY TEST STRIP IN THE BOTTOM OF PHASE 1 PER SPECIFICATION 02218.
8. CONTRACTOR TO RETAIN AND PROTECT BENCHMARKS ESTABLISHED BY J.J. HOWARD OCTOBER 2002.
   BM#1 N509079.64 E364114.83 EL 2564.83
   BM#2 N507733.60 E364546.38 EL 2577.31
   BM#3 N508251.83 E362173.24 EL 2653.77

REFERENCE DRAWINGS

DRAWING NO.	DRAWING TITLE

TABLE 1 LCRS COORDINATES (SEE NOTE 1)

POINT ID	NORTHING	EASTING	ELEVATION	COMMENTS	POINT ID	NORTHING	EASTING	ELEVATION	POINT ID	NORTHING	EASTING	ELEVATION
L01	508742.48	362289.26	2640.00	EDGE OF BERM	L10	508496.16	363024.78	2566.33	L19	508038.48	363505.23	2575.32
L02	508747.78	364191.25	2605.00	EDGE OF BERM	L11	508512.37	363040.91	2570.96	L20	508047.45	363498.20	2572.01
L03	507845.78	364193.74	2605.00	EDGE OF BERM	L12	508495.66	363057.45	2565.49	L21	508099.93	363099.08	2565.00
L04	507840.49	362291.75	2640.00	EDGE OF BERM	L13	508490.08	363487.73	2554.38	L22	508039.98	363042.22	2583.44
L05	508675.67	362358.45	2640.00	GEOMEMBRANE CREST	L14	508506.35	363503.92	2559.23	L23	508048.93	363033.20	2580.20
L06	508660.59	364124.44	2605.00	GEOMEMBRANE CREST	L15	508489.93	363520.47	2553.98	L24	508085.90	362547.09	2577.00
L07	507912.60	364126.55	2605.00	GEOMEMBRANE CREST	L16	508491.60	363947.07	2545.70	L25	508472.13	362968.03	2567.39
L08	507907.67	362358.56	2640.00	GEOMEMBRANE CREST	L17	508066.59	363979.45	2556.10	L26	508465.81	363431.15	2555.84
L09	508504.48	362539.63	2579.10		L18	508089.67	363950.08	2556.70	L27	508466.31	363874.67	2547.27

LEGEND

N.I.C. NOT IN CONTRACT

SCALE

US Ecology Idaho
an American Ecology company

GRAND VIEW FACILITY
LANDFILL CELL 15

SITE PLAN/CELL LAYOUT

Washington

DRAWN BY	CHECKED BY	WORK ORDER NUMBER
L. HAYS		25124
DESIGNED BY	ENG. MGR. APPR.	DRAWING NUMBER / REV
R. HANSEN		52-01-01 / 0

52-01-02

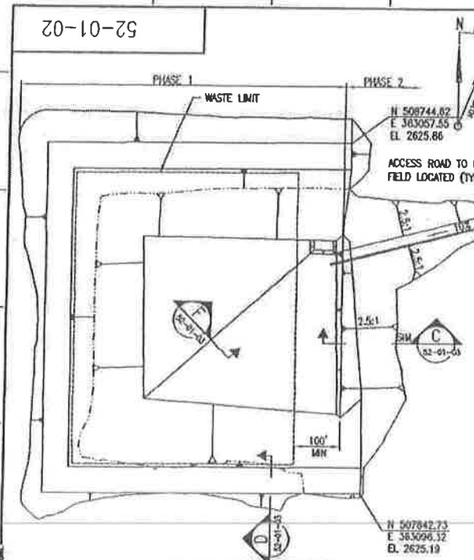

PHASE 1 CONSTRUCTION

DETAIL 1 (52-01-01) 1" = 150'

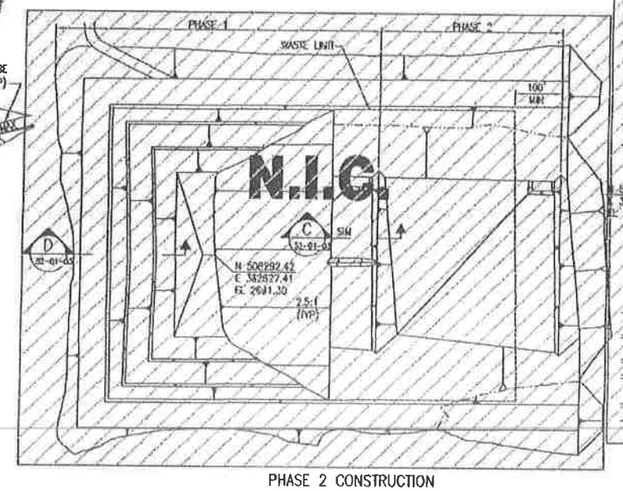

PHASE 2 CONSTRUCTION

DETAIL 2 (52-01-01) 1" = 150'

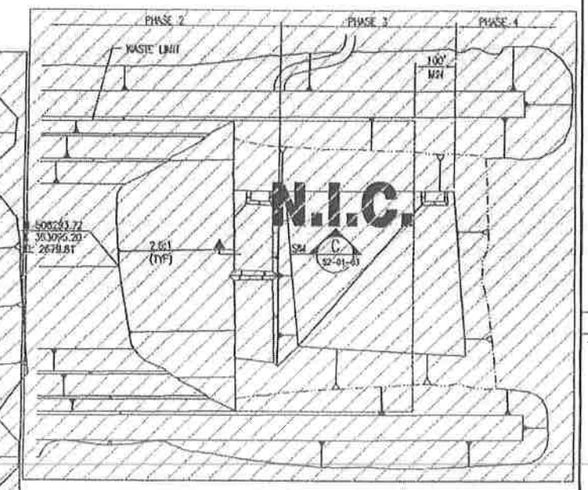

PHASE 3 CONSTRUCTION

DETAIL 3 (52-01-01) 1" = 150'

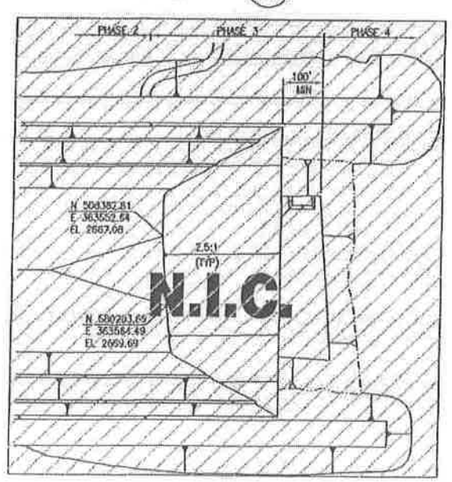

PHASE 3 WASTE PLACEMENT

DETAIL 4 (52-01-01) 1" = 150'

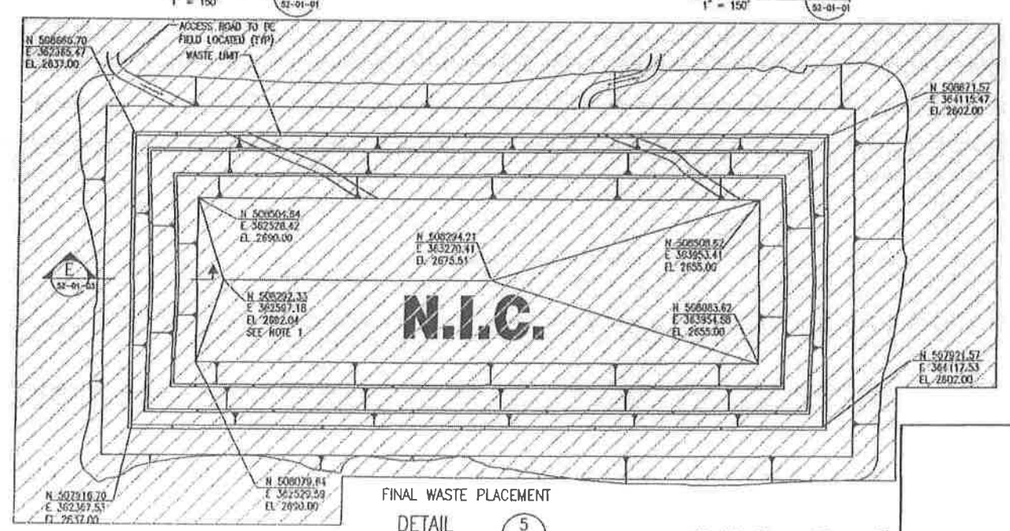

FINAL WASTE PLACEMENT

DETAIL 5 (52-01-01) 1" = 150'

REV	DATE	DESCRIPTION	BY	REV BY
0		ISSUE FOR CONSTRUCTION		

NOTES

1. COORDINATES SHOWN FOR WASTE LIMITS ARE THE MAXIMUM LIMITS WASTE MAY BE PLACED.

LEGEND

N.I.C. NOT IN CONTRACT

REFERENCE DRAWINGS

DRAWING NO.	DRAWING TITLE

US Ecology Idaho

an American Ecology company

GRAND VIEW FACILITY
LANDFILL CELL 15

CELL CONSTRUCTION PHASING AND WASTE LIMITS

Washington

DRAWN BY	CHECKED BY	WORK ORDER NUMBER	
L. HAYS		25124	
DESIGNED BY	ENG. MGR. APPR.	DRAWING NUMBER	REV
R. HANSEN		52-01-02	0

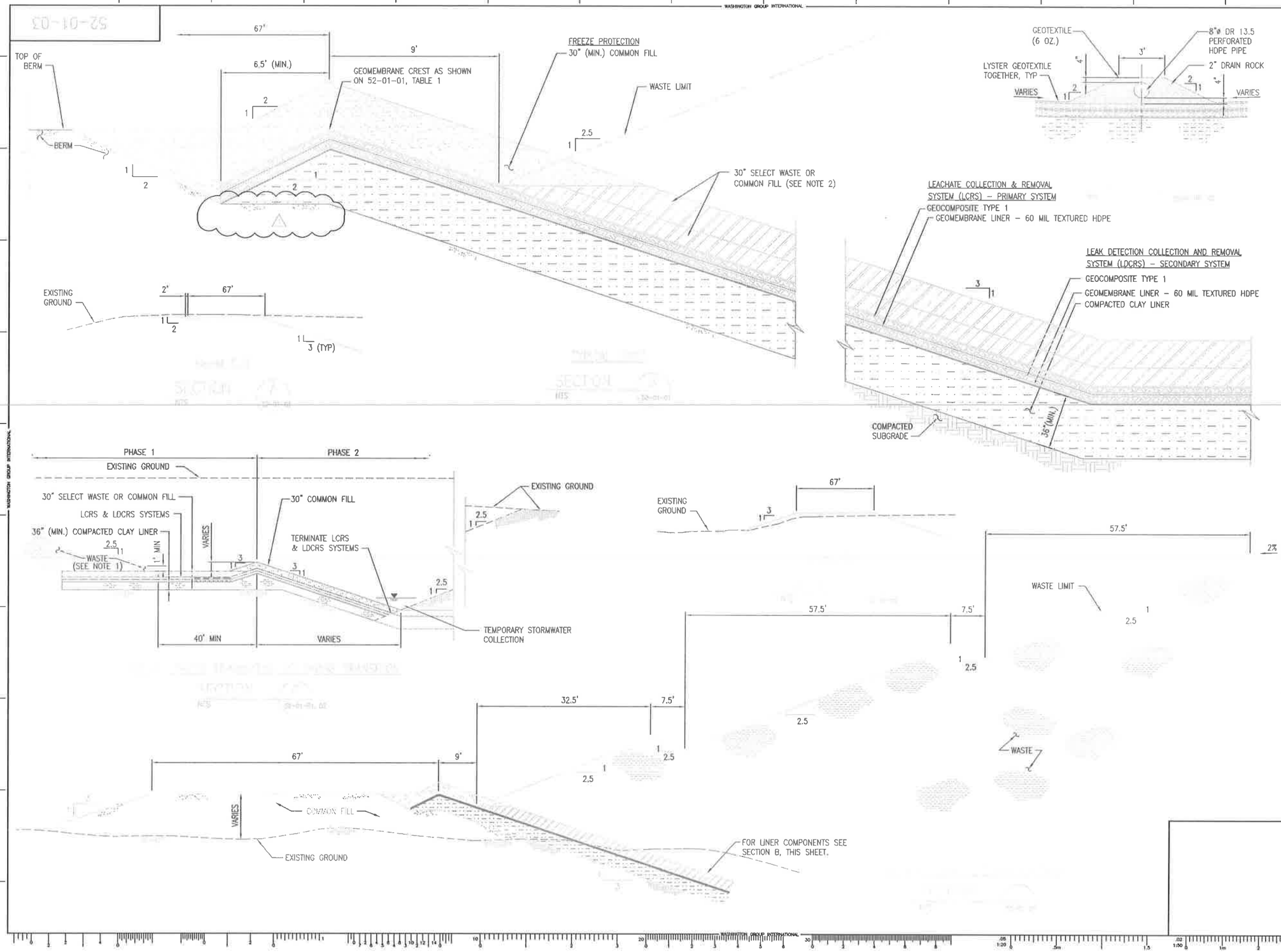

REV	DATE	DESCRIPTION	PE	DEPT MGR
0		ISSUE FOR TRANSMISSION		
1	6/14/05	NOTE CORRECTION		

NOTES

1. DURING OPERATIONS WASTE SHALL BE GRADED IN ACCORDANCE WITH THE STORM WATER MANAGEMENT PLAN. TEMPORARY BERMS MAY BE USED TO DIVERT STORM WATER TO STORAGE LOCATIONS.
2. SEE SPECIFICATION 00220 FOR LAYER REQUIREMENTS.

REFERENCE DRAWINGS

DRAWING NO.	DRAWING TITLE

US Ecology Idaho

an American Ecology company

GRAND VIEW FACILITY
LANDFILL CELL 15

SECTIONS AND DETAILS
SHEET 1

Washington

DRAWN BY	CHECKED BY	WORK ORDER NUMBER	
L. HAYS		25124	
DESIGNED BY	ENG MGR APPR	DRAWING NUMBER	REV
R. HANSEN		52-01-03	1

52-01-04

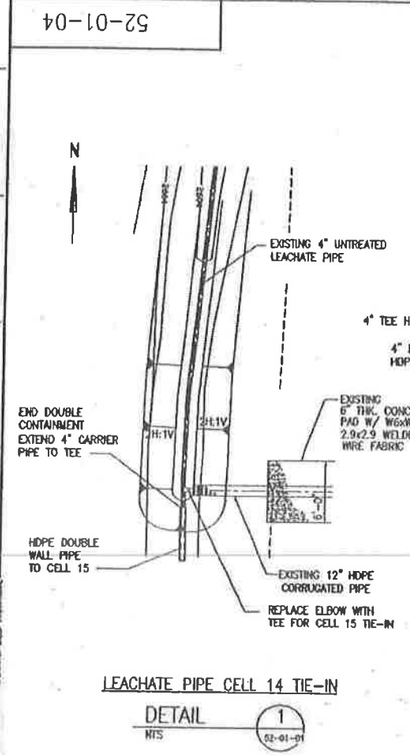

LEACHATE PIPE CELL 14 TIE-IN

DETAIL 1 (NTS, 52-01-01)

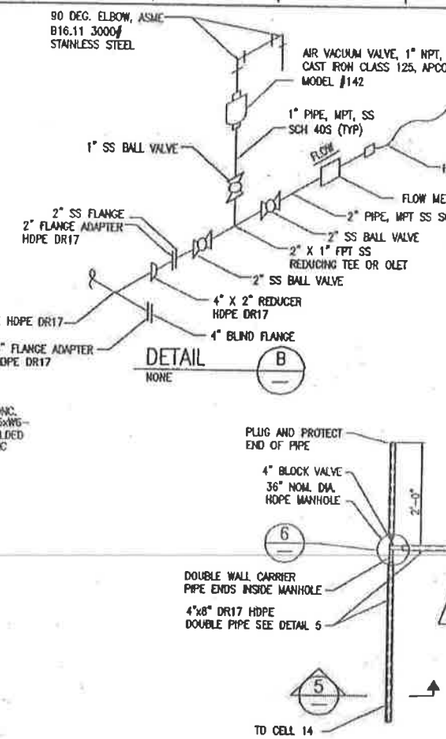

DETAIL B (NONE)

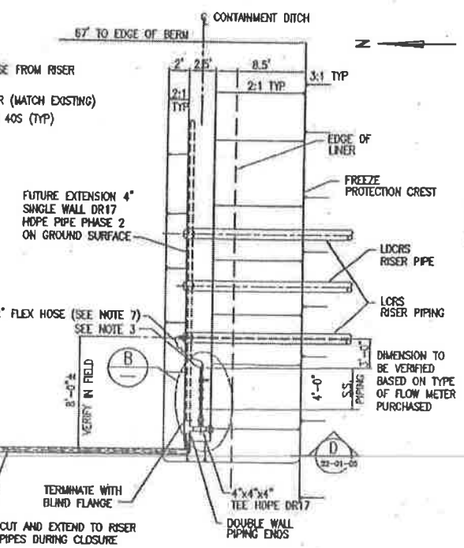

PHASE 1 – LEACHATE PIPING

DETAIL 2 (NTS, 52-01-01)

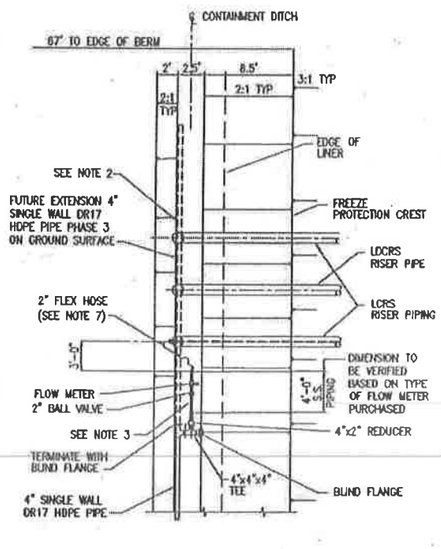

PHASE 2 & 3 – LEACHATE PIPING

DETAIL 3 (NTS, 52-01-01)

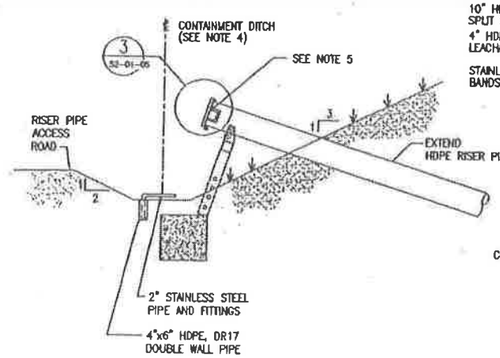

FINAL COVER TYPICAL LEACHATE/RISER PIPE DETAIL

SECTION A (NTS, 52-01-06)

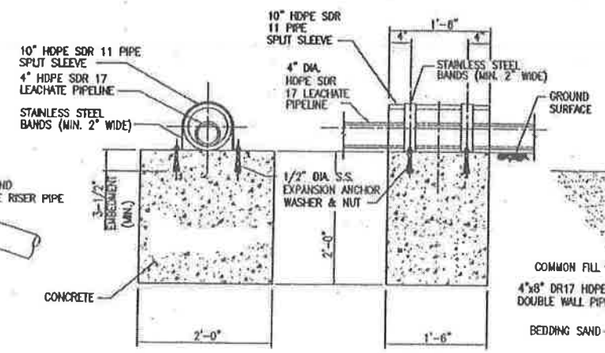

TYPICAL GUIDE DETAIL

DETAIL 4 (NTS, 52-01-01)

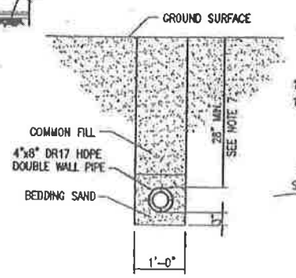

TYPICAL BURIED PIPE TRENCH

DETAIL 5 (NTS, 52-01-01)

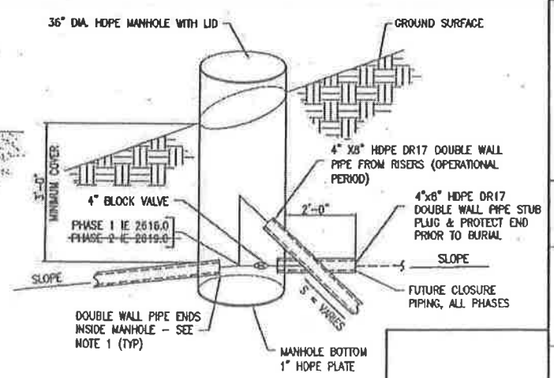

DETAIL 6 (NTS, 52-02-01)

REV	DATE	DESCRIPTION	BY	REVIEW
0		ISSUE FOR CONSTRUCTION		

NOTES

1. HDPE MANHOLE SERVES AS SECONDARY CONTAINMENT. ALL PIPE PENETRATIONS MUST BE WATERTIGHT.
2. REMOVE 4" SINGLE WALL LEACHATE PIPES PRIOR TO COVER INSTALLATION.
3. REINSTALL 2" STAINLESS STEEL PIPE AND FITTINGS AT NEW LOCATION UPON CONSTRUCTION OF THE COVER.
4. LENGTH OF CONTAINMENT DITCH IS LIMITED TO LENGTH OF 2" STAINESS STEEL PIPE AND FITTINGS.
5. FLEX HOSE COUPLING NOT SHOWN FOR CLARITY.
6. CONCRETE TO HAVE A MINIMUM COMPRESSIVE STRENGTH OF 3,000 PSI AT 28 DAYS.
7. DOUBLE WALL PIPE EMBEDMENT DEPTH SHALL BE 36" MINIMUM BENEATH ROADWAYS.

LEGEND

NOT IN CONTRACT

REFERENCE DRAWINGS

DRAWING NO.	DRAWING TITLE

US Ecology Idaho
an American Ecology company

GRAND VIEW FACILITY
LANDFILL CELL 15

SECTIONS AND DETAILS
SHEET 2

Washington

DRAWN BY	CHECKED BY	WORK ORDER NUMBER	
L. HAYS		25124	
DESIGNED BY	ENG MGR APPR	DRAWING NUMBER	REV
R. RAGER		52-01-04	0

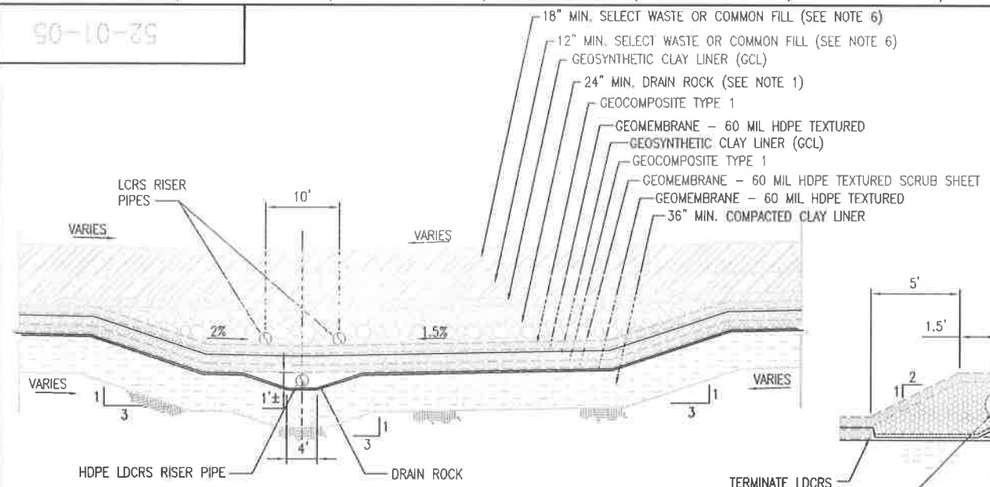

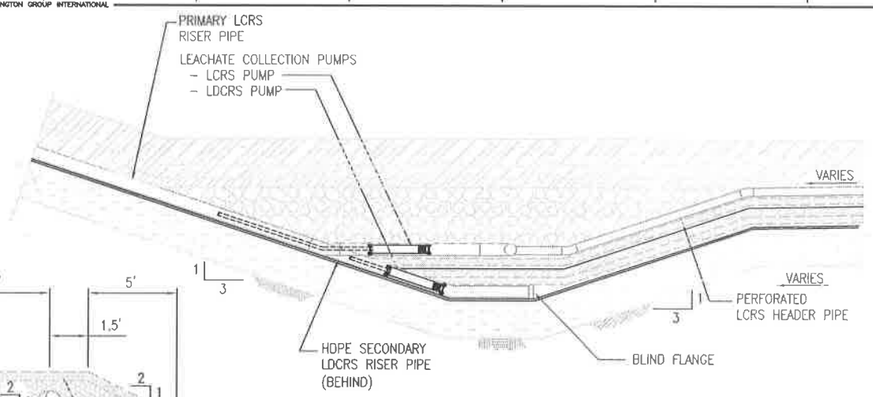

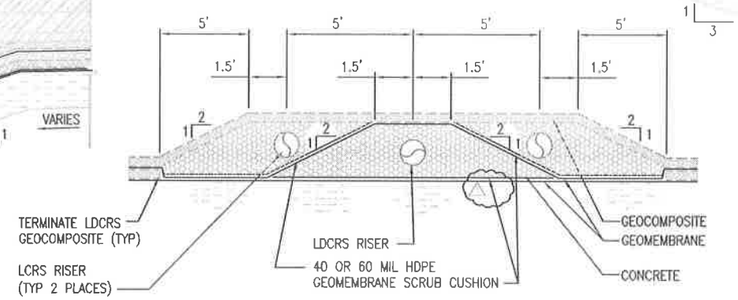

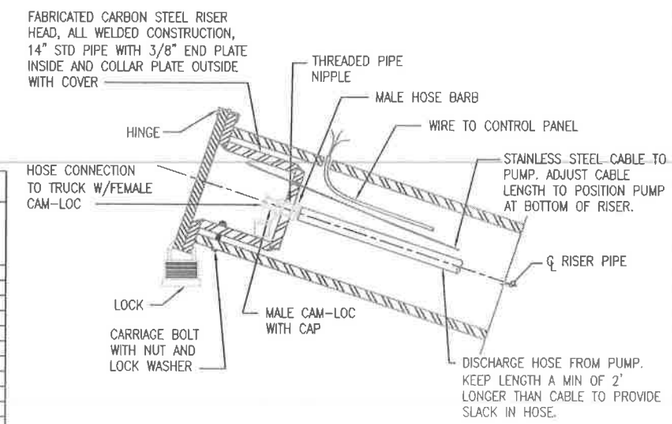

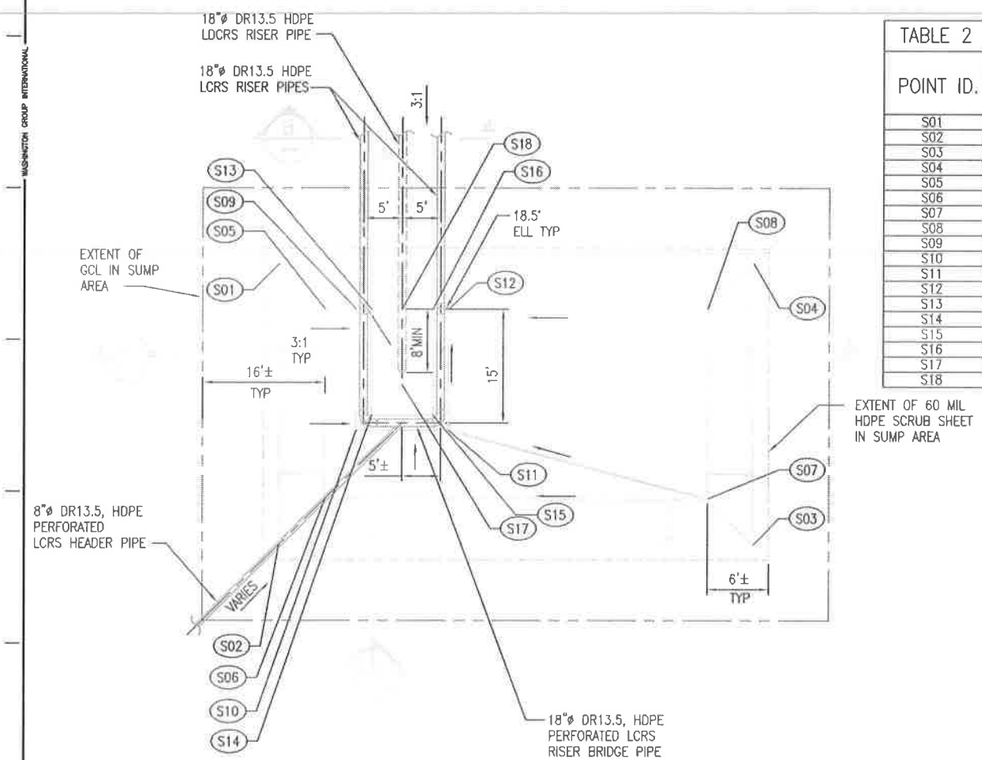

TABLE 2 SUMP GEOMETRY				
POINT ID.	RELATIVE X (FT) (SEE NOTE 2)	RELATIVE Y (FT) (SEE NOTE 2)	RELATIVE ELEVATION (SEE NOTE 2)	COMMENT
S01	VARIES	VARIES	VARIES	UNIQUE TO EACH SUBCELL
S02	VARIES	VARIES	VARIES	UNIQUE TO EACH SUBCELL
S03	VARIES	VARIES	VARIES	UNIQUE TO EACH SUBCELL
S04	VARIES	VARIES	VARIES	UNIQUE TO EACH SUBCELL
S05	0	0	100.10	TIE-IN POINT SEE NOTE 2
S06	0	-25	100.37	
S07	50	-25	100.69	
S08	50	0	100.53	
S09	4	0	100.00	
S10	4	-16	100.15	
S11	16	-16	100.15	
S12	16	0	100.00	
S13	6	0	100.00	
S14	6	-14	100.15	
S15	14	-14	100.15	
S16	14	0	100.00	
S17	10	-10	100.25	
S18	10	0	100.15	

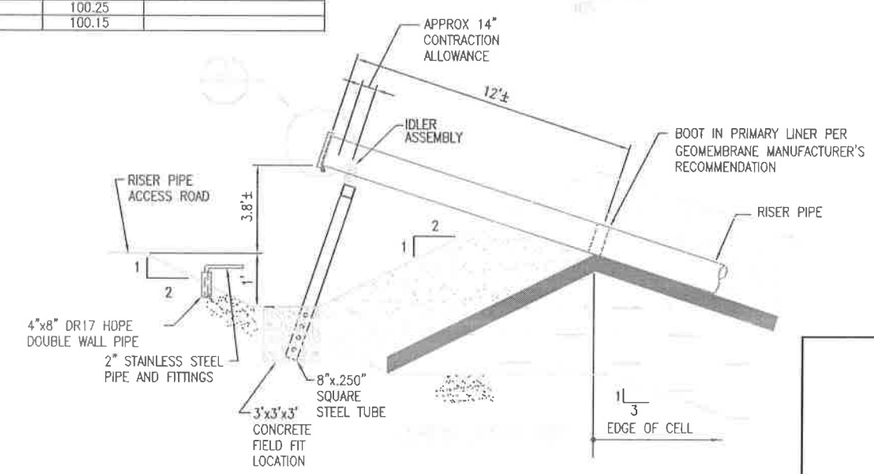

REV	DATE	DESCRIPTION	PE	DEPT MGR
0	12/14/05	FOR 90% SUBMITTAL INITIAL SUBMITTAL (FOR CDR)		

NOTES

1. FOR BEDDING AND HAUNCHING OF LCRS AND LDCRS SEE SPECIFICATION 02220.
2. SUMP X, Y AND ELEVATIONS SHOWN IN TABLE 2 ARE DISTANCES RELATIVE TO POINT S05 (TIE-IN POINT). ACTUAL SUMP NORTHINGS, EASTINGS AND ELEVATIONS FOR POINT S05 ARE SHOWN ON DRAWING 52-01-01 FOR EACH PHASE. SUMP ELEVATIONS ARE TOP OF LCRS GEOMEMBRANE.

   Y, –X, X, N, –Y

   NOTE: S05 IS AT X=0, Y=0, EL=100.10
3. LDCRS RISER PIPE DETAIL IS SIMILAR TO THE LCRS PIPE.
4. PIPES SHOWN ARE DRISCO 1000 SERIES OR EQUAL.
5. ALL PERFORATED PIPE SHALL BE WRAPPED WITH DRAIN ROCK AND 6 OZ. NONWOVEN GEOTEXTILE AS SHOWN IN SECTION F ON DRAWING 52-01-03.
6. SEE SPECIFICATION 02200 FOR PLACEMENT REQUIREMENTS.

REFERENCE DRAWINGS

DRAWING NO.	DRAWING TITLE

US Ecology Idaho

an American Ecology company

GRAND VIEW FACILITY
LANDFILL CELL 15

SECTIONS AND DETAILS
SHEET 3

Washington

DRAWN BY	CHECKED BY	WORK ORDER NUMBER	
L. HAYS		25124	
DESIGNED BY	ENG MGR APPR	DRAWING NUMBER	REV
R. HANSEN		52-01-05	1

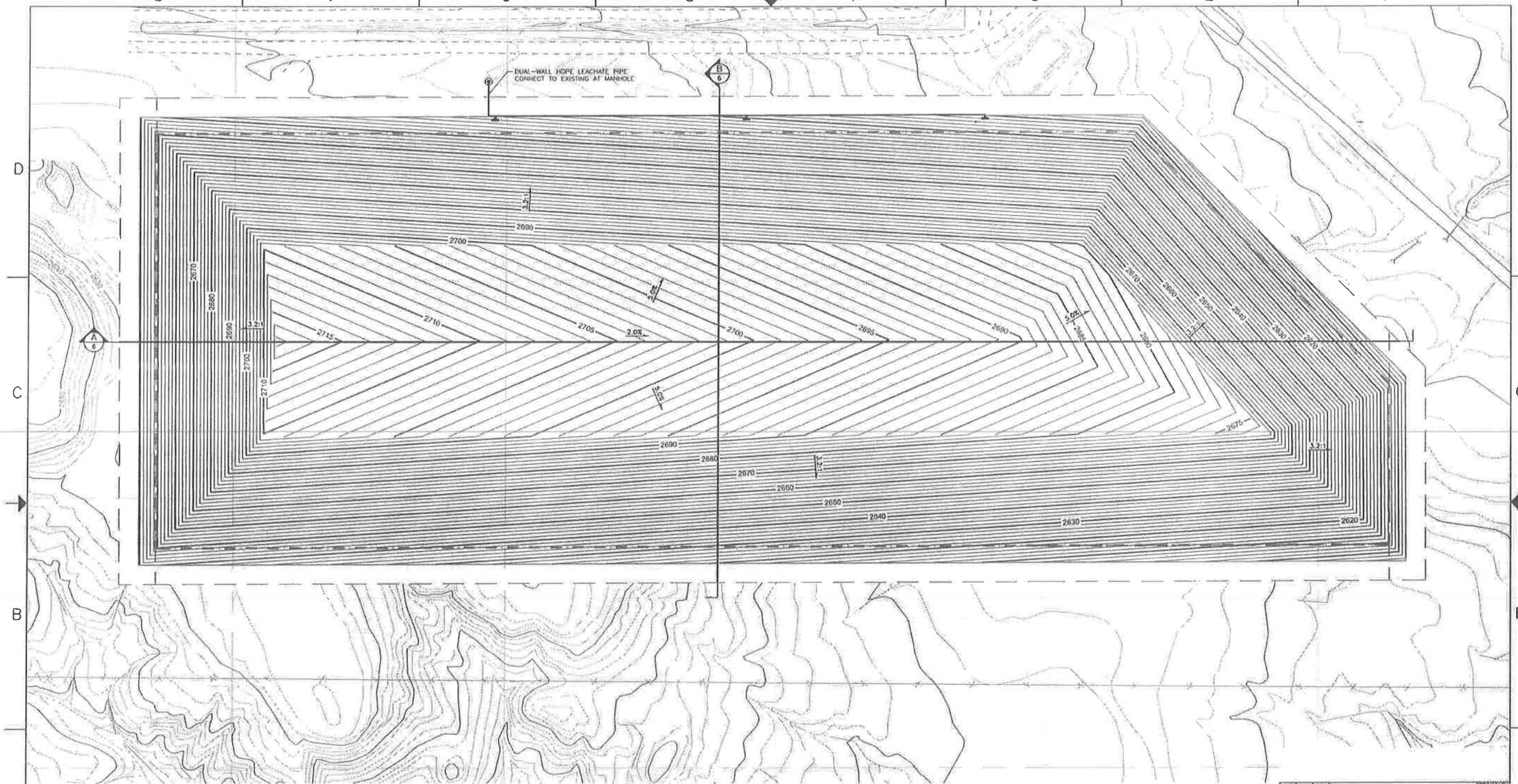

NOTES:
1. CONTOUR INTERVAL 2-FEET ON SIDE SLOPES AND 1-FOOT ON TOP DECK. CONTOURS ARE FEET ABOVE MEAN SEA LEVEL.
2. REMOVE 4-INCH SINGLE WALL LEACHATE PIPES PRIOR TO COVER INSTALLATION.
3. RE-INSTALL 2-INCH STAINLESS STEEL PIPE AND 4"x8" HDPE DOUBLE WALL PIPE AT NEW LOCATION UPON CONSTRUCTION OF THE COVER - SEE DETAIL 1 SHEET 8.

Explanation

- Limits of lined cell
- Leachate riser manhole
- Existing leachate pipe 4-inch single wall HDPE
- New leachate pipe
- New leachate riser and piping

NORTH

0 80 FT

NOT FOR CONSTRUCTION

REV.	BY / DATE	CHK'D / DATE	DESCRIPTION	PROJ. ENGR. / DATE	SUPV. ENGR. / DATE

USEcology Idaho

an American Ecology company

Daniel B. Stephens & Associates, Inc.
ENVIRONMENTAL SCIENTISTS & ENGINEERS
6020 ACADEMY NE, SUITE 100, ALBUQUERQUE, NM 87109, (505) 822-9400

SITE B
GRAND VIEW, IDAHO
US EPA ID NO. IDD 073 114 654

TITLE:
CIVIL
CELL 15 - FINAL CLOSURE
FINAL COVER GRADING PLAN

DRAWN BY: K.DB 10/25/10	SCALE: AS NOTED	FILE CODE ES07_0130_020	REV. NO. 3
CHECKED: M. Miller 10/25/10	ENGINEER: R.E.Peters 10/25/10	DWG. NO. SHEET 5 of 8	
PROJ. MGR.: J. Kelsey 10/25/10	APPROVED:	PROJ. NO. ES07.0130	

Robert Eric Peters 10/25/2010

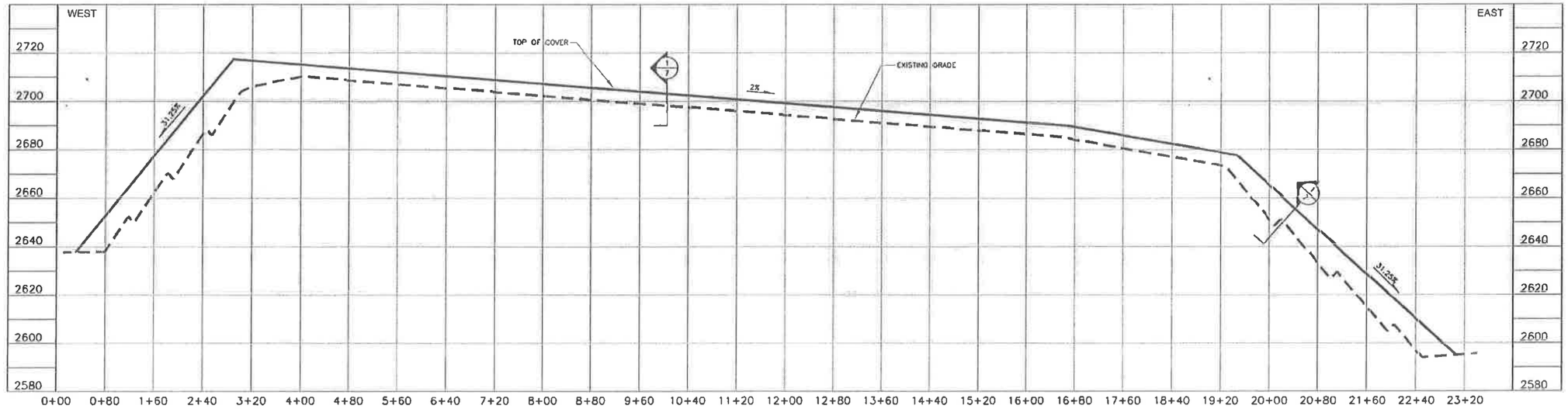

NOTE: VERTICAL EXAGGERATION x4

CROSS SECTION A/5
HORIZONTAL SCALE: 1"=80'
VERTICAL SCALE: 1"=20'

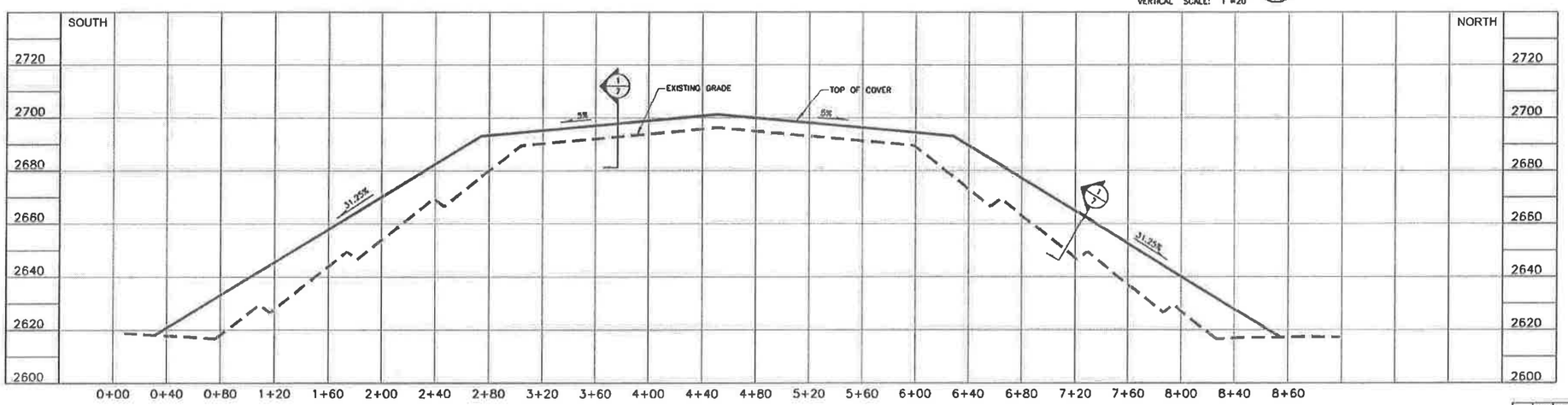

NOTE: VERTICAL EXAGGERATION x2

CROSS SECTION B/5
HORIZONTAL SCALE: 1"=40'
VERTICAL SCALE: 1"=20'

REV.	BY DATE	CHK'D DATE	DESCRIPTION	PROJ ENGR DATE	CONST ENGR DATE

USEcology Idaho
an American Ecology company

Daniel B. Stephens & Associates, Inc.
ENVIRONMENTAL SCIENTISTS & ENGINEERS
6020 ACADEMY NE, SUITE 100, ALBUQUERQUE, NM 87109, (505) 822-9400

SITE B
GRAND VIEW, IDAHO
US EPA ID NO. IDD 073 114 654

TITLE:
CIVIL
CELL 15 - FINAL CLOSURE
TYPICAL CROSS SECTIONS

DRAWN BY: CDB DATE 10/25/10	SCALE: AS NOTED	FILE CODE ES07_0130_078	REV. NO.
CHECKED M. Maley DATE 10/25/10	ENGINEER R.E.Pease DATE 10/25/10	DWG. NO. SHEET 6 of 8	3
PROJ. MGR. J. Kelsey DATE 10/25/10	APPROVED DATE	PROJ. NO. ES07.0130	

PROFESSIONAL ENGINEER REGISTERED ERIC PEASE 10/25/2010

NOT FOR CONSTRUCTION

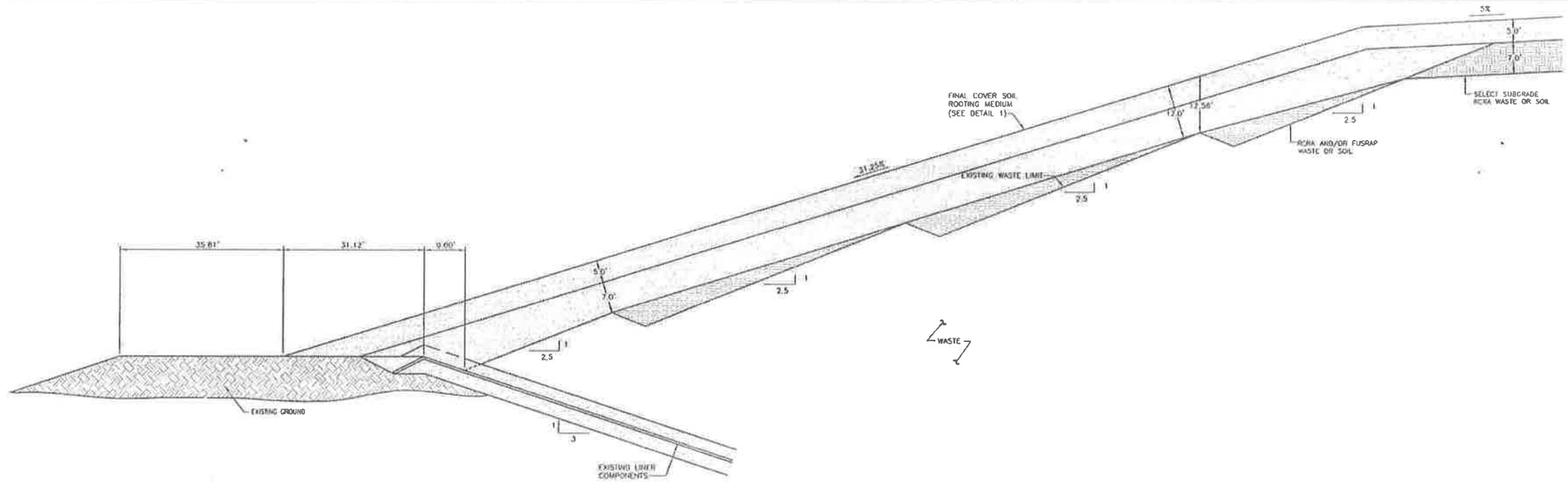

TYPICAL FINAL COVER CROSS-SECTION
N.T.S.

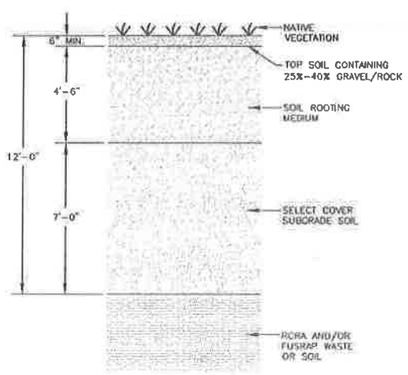

SIDE SLOPE

NOTES:
1. BONDED FIBER MATRIX OR EROSION CONTROL BLANKET APPLIED TO SURFACE FOR TEMPORARY (1-YEAR) STABILIZATION TO PROMOTE ESTABLISHING VEGETATION.
2. SIDE SLOPE: MINIMUM SOIL THICKNESS COVER OF 11.81-FOOT (3.6 METER) NEEDED TO MEET RADON BARRIER REQUIREMENT.
3. TOP DECK: SELECT RCRA WASTE OR SOIL TO BE PLACED AT MINIMUM 7.0-FOOT THICKNESS OVER FUSRAP WASTE. MINIMUM SOIL COVER THICKNESS OF 4.81 FEET NEEDED TO MEET 11.81-FOOT (3.6 METER) RADON BARRIER REQUIREMENT AND 5.0 FEET FOR EVAPOTRANSPIRATION COVER PERFORMANCE.

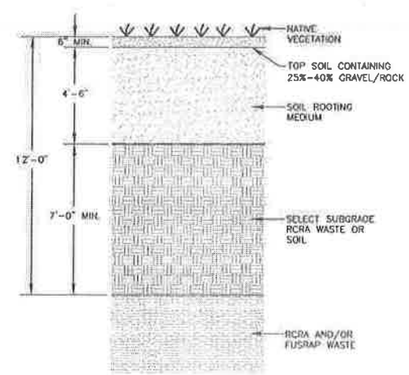

TOP DECK

CELL 15 EVAPOTRANSPIRATION FINAL COVER SCHEMATIC (1)
N.T.S. (-)

NOT FOR CONSTRUCTION

REV.	BY DATE	CHK'D DATE	DESCRIPTION	PROJ ENGR DATE	FUNT MGR DATE

USEcology Idaho
an American Ecology company

Daniel B. Stephens & Associates, Inc.
ENVIRONMENTAL SCIENTISTS & ENGINEERS
6020 ACADEMY NE, SUITE 100, ALBUQUERQUE, NM 87109, (505) 822-9400

SITE B
GRAND VIEW, IDAHO
US EPA ID NO. IDD 073 114 654

TITLE:
CIVIL
CELL 15 – FINAL CLOSURE
TYPICAL FINAL COVER SECTION AND DETAILS

DRAWN BY: DATE	SCALE:	FILE CODE: PRWL35A	REV. NO.
10/25/10	N.T.S.	DWG. NO.	
CHECKED DATE	ENGINEER DATE	SHEET 7 of 8	3
M. Miller 10/25/10	R.E. Pease 10/25/10		
PROJ. MGR. DATE	APPROVED DATE	PROJ. NO. PRWL	
J. Kelley 10/25/10			

Robert Eric Pease 10/25/2010

52-01-06

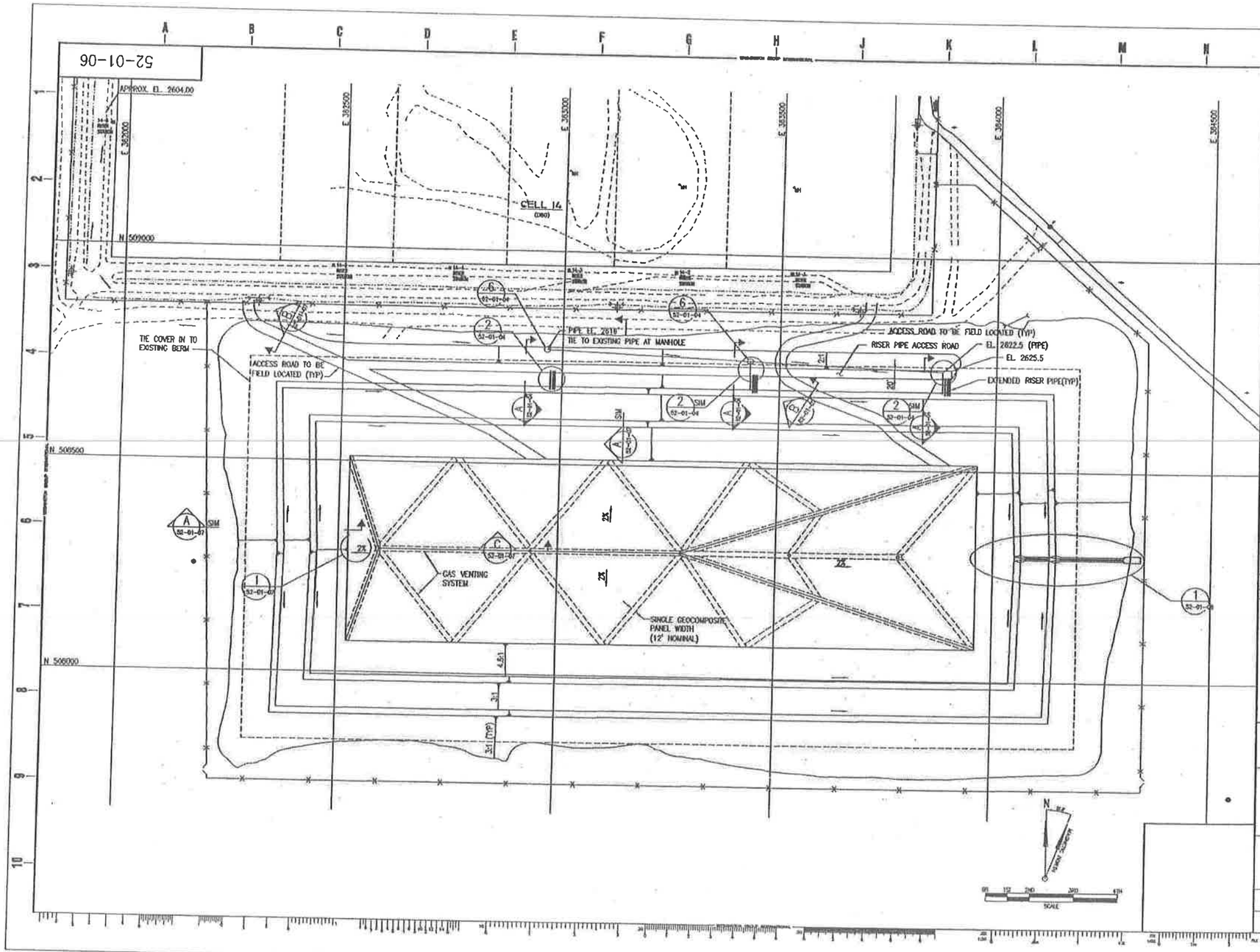

NO	DATE	DESCRIPTION	BY	DATE APPR

NOTES

1. ACCESS ROADS SHOWN ARE ARBITRARY AND SHALL BE LOCATED BY U.S. ECOLOGY.
2. MINOR ADJUSTMENTS TO CONTROL POINTS SHOWN WILL BE ACCEPTABLE IN ORDER TO MAKE THE CONTOUR LINES SMOOTH AND CONTINUOUS AND TO ELIMINATE SHARP CORNERS.
3. GAS VENT AND SURFACE CONTROL POINT.

REFERENCE DRAWINGS

DRAWING NO.	DRAWING TITLE

US Ecology Idaho
an American Ecology company

GRAND VIEW FACILITY
LANDFILL CELL 15

FINAL COVER
GRADING PLAN

Washington

DRAWN BY	CHECKED BY	WORK ORDER NUMBER	
L. HAYS		25124	
DESIGNED BY	ENG. MGR. APPR.	DRAWING NUMBER	REV
R. HANSEN		52-01-06	A

52-01-07

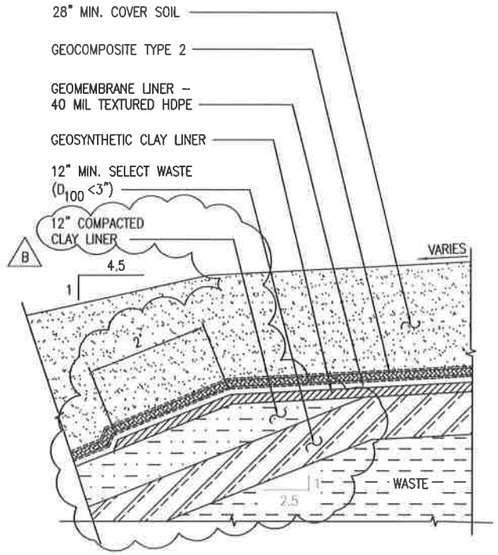

TYPICAL FINAL CLOSURE COVER SYSTEM

DETAIL 1 / 52-01-06

NTS

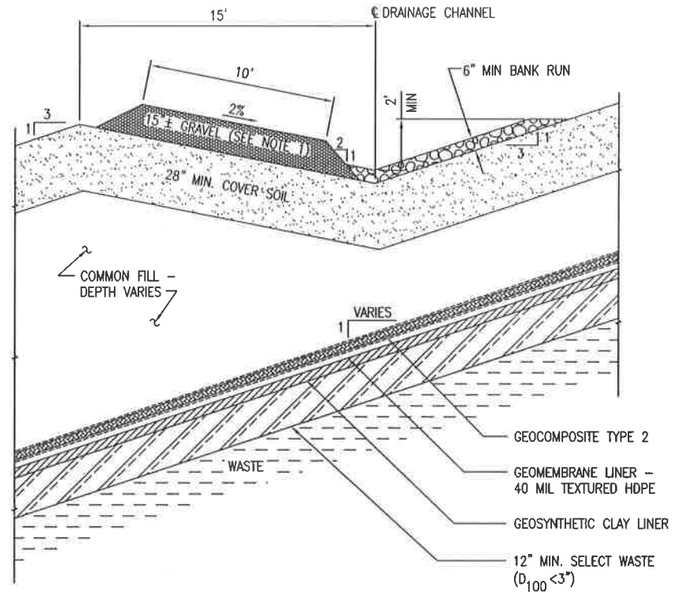

TYPICAL ACCESS ROAD CROSS SECTION

SECTION B / 52-01-06

NTS

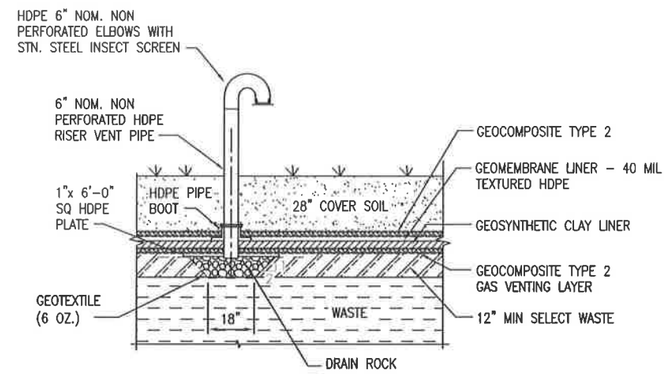

GAS VENTING SYSTEM

SECTION C / 52-01-06

NTS

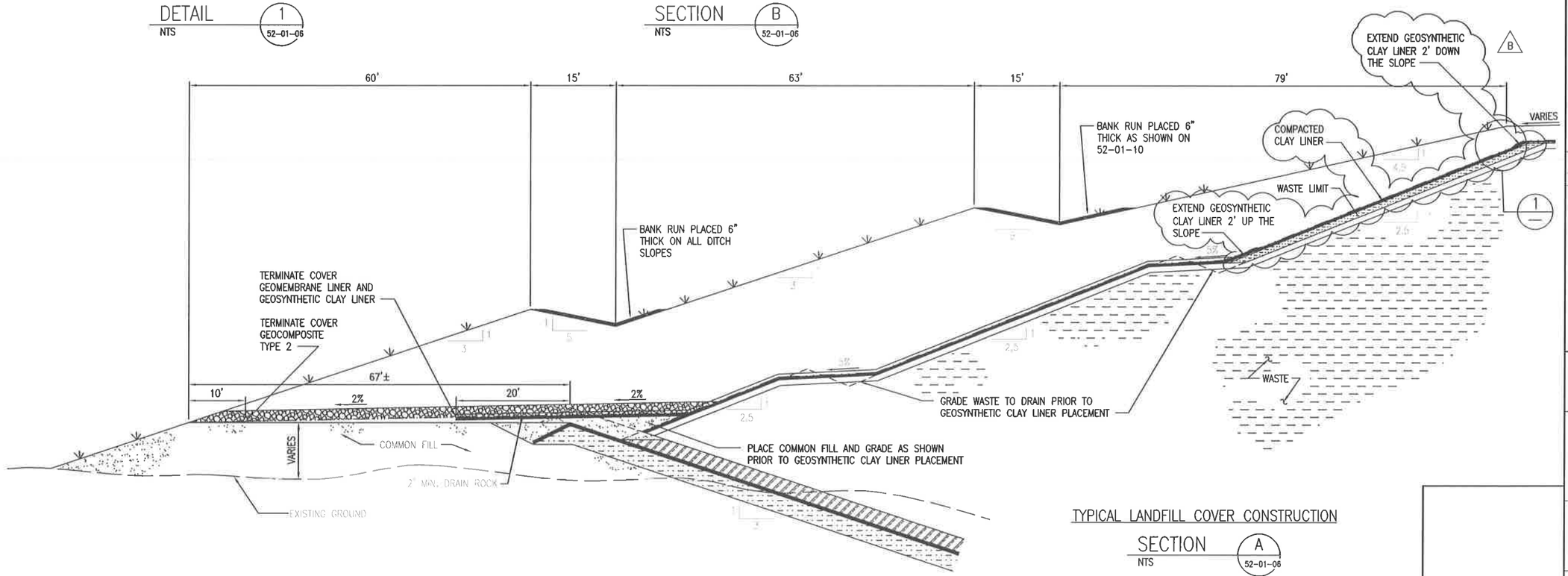

TYPICAL LANDFILL COVER CONSTRUCTION

SECTION A / 52-01-06

NTS

REV	DATE	DESCRIPTION	PE	DEPT MGR

NOTES

1. GRAVEL SURFACING TO BE PROVIDED BY OWNER.

REFERENCE DRAWINGS

DRAWING NO.	DRAWING TITLE

US Ecology Idaho

an American Ecology company

GRAND VIEW FACILITY
LANDFILL CELL 15

FINAL COVER SECTIONS AND DETAILS 1

Washington

DRAWN BY	CHECKED BY	WORK ORDER NUMBER	
L. HAYS		25124	
DESIGNED BY	ENG MGR APPR	DRAWING NUMBER	REV
R. HANSEN		52-01-07	B

FILE NAME: W025124\52010T.DWG

PLOT DATE: 6/4/02

WASHINGTON GROUP INTERNATIONAL

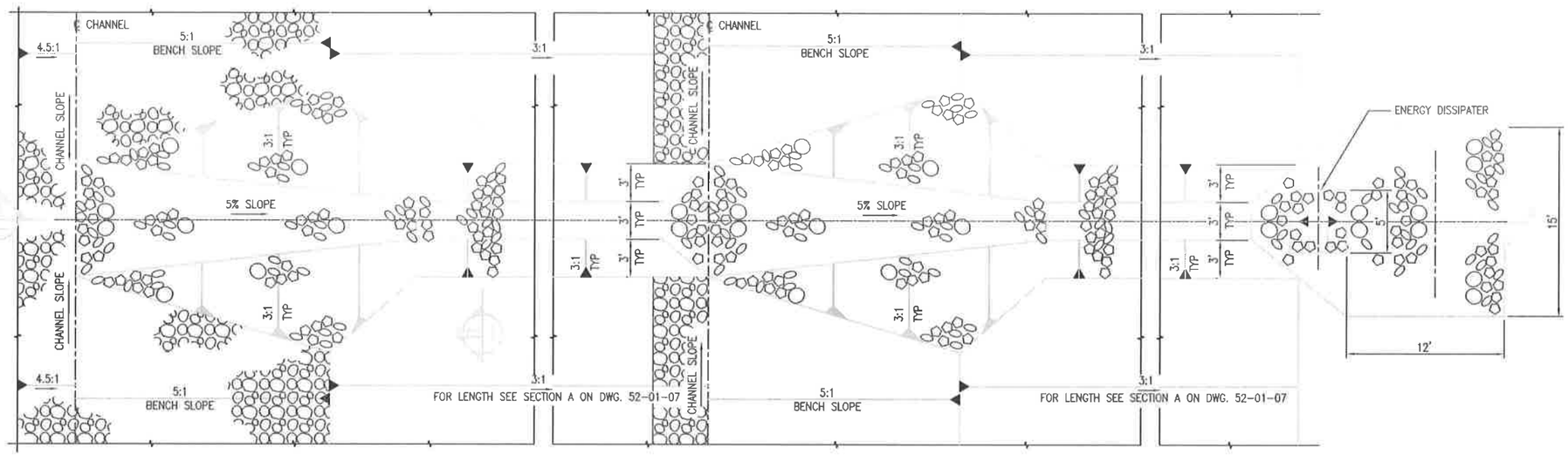

PLAN AT CAP

PLAN AT BENCH

PLAN AT BASE

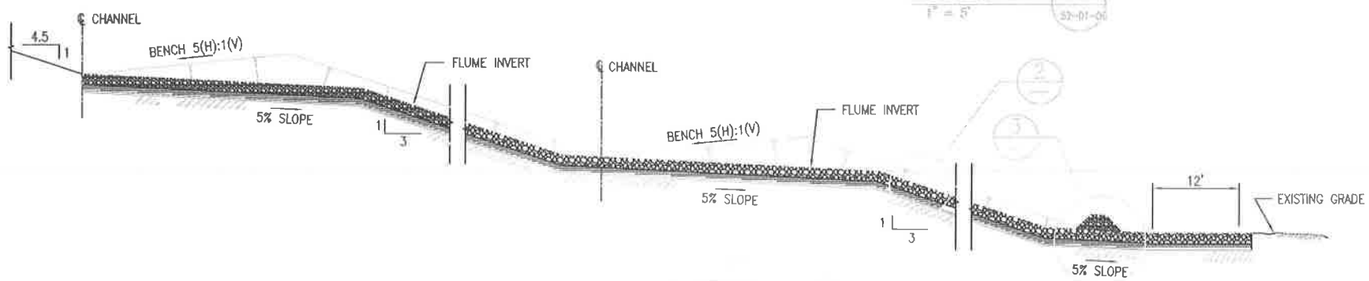

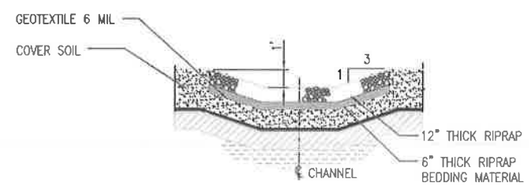

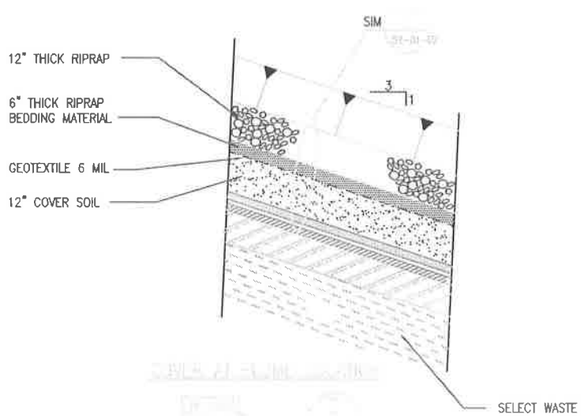

(SEE SECTION A
DWG. 52-01-07)

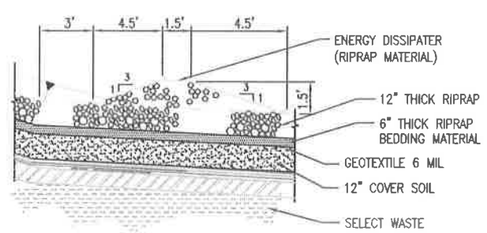

REV	DATE	DESCRIPTION	PE	DEPT MGR

NOTES

REFERENCE DRAWINGS

DRAWING NO.	DRAWING TITLE

US Ecology Idaho

an American Ecology company

GRAND VIEW FACILITY
LANDFILL CELL 15
FINAL COVER
SECTIONS AND DETAILS
SHEET 2

Washington

DRAWN BY	CHECKED BY	WORK ORDER NUMBER	
L. HAYS		25124	
DESIGNED BY	ENG MGR APPR	DRAWING NUMBER	REV
J.BESSAW		52-01-08	A

SHEET #	DRAWING DESCRIPTION	REVISION
15-08-00	DRAWING INDEX / COVER SHEET	0
15-08-01	PHASE IV LINER LAYOUT / PLAN VIEW	0
15-08-02	CELL LINER SECTIONS	0
15-08-03	INTERIM WASTE PLACEMENT	0
15-08-04	FINAL WASTE PLACEMENT	0
15-08-05	FINAL COVER GRADING PLAN	0
15-08-06	FINAL COVER SECTIONS AND DETAILS	0
15-08-07	FLUME SECTIONS AND DETAILS	0

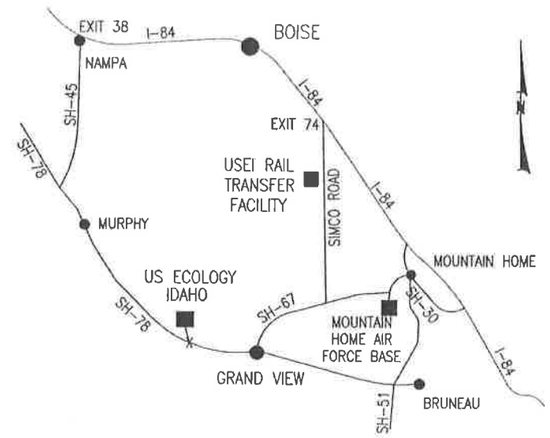

PROJECT VICINITY MAP

NOT TO SCALE

GENERAL NOTES

1. REFERENCE THE ORIGINAL CELL 15 DESIGN DRAWINGS, PREPARED BY WASHINGTON GROUP INTERNATIONAL (2001), FOR COORDINATES AND ELEVATIONS OF EXISTING CELL FEATURES.
2. DIMENSION LABELS HAVE PRECEDENCE OVER SCALED DIMENSIONS.
3. ANY DISCREPANCIES SHALL BE BROUGHT TO THE ATTENTION OF THE ENGINEER.
4. INTERNAL REFERENCES TO DRAWING NUMBERS WITHIN THIS SET HAVE BEEN ABBREVIATED FOR SIMPLICITY (E.G. DRAWING 15-08-02 IS REFERENCED AS DRAWING 02).

LEGEND

- FENCE LINE
- PROPERTY BOUNDARY
- UNIMPROVED ROAD
- 2550 — TOPOGRAPHIC CONTOURS
- CULVERT
- DRAINAGE CHANNEL
- WASTE LIMIT
- EDGE OF PAVEMENT
- EXISTING TELEPHONE LINE
- LEACHATE PIPE
- SURVEY COORDINATE GRID LINE
- CUT
- FILL
- SURVEY MONUMENT
- POWER POLE
- MONITOR WELL
- FENCE GATE

REV	DATE	BY	DESCRIPTION
0	3/16/09	VJT	FOR CONSTRUCTION

PROFESSIONAL ENGINEER REGISTERED 3/16/09 11632 STATE OF IDAHO AUGUSTIN THURGOOD

US Ecology Idaho

an American Ecology company

PREPARED BY

AMERICAN GEO TECHNICS

5260 Chinden Blvd · Boise, Idaho 83714
Phone (208) 658-8700 · Fax (208) 658-8703

DRAWN BY	CHECKED BY	PROJECT NUMBER
VJT	RWH	07B-G1653

PROJECT NAME

CELL 15 – PHASE IV MODIFICATION
GRANDVIEW, IDAHO

DRAWING INDEX / COVER SHEET

DRAWING NUMBER 15-08-00 REV 0

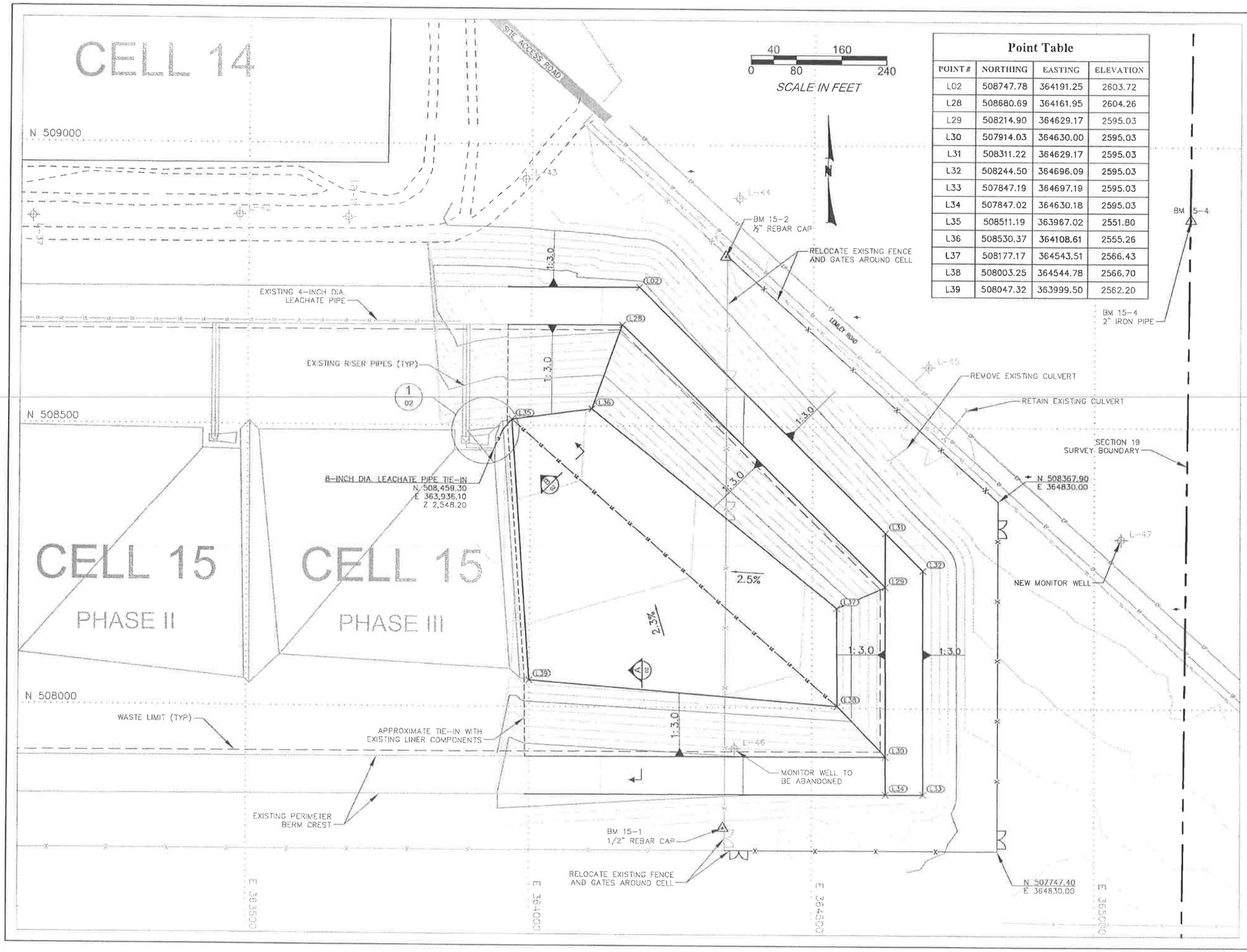

Point Table			
POINT #	NORTHING	EASTING	ELEVATION
L02	508747.78	364191.25	2603.72
L28	508680.69	364161.95	2604.26
L29	508214.90	364629.17	2595.03
L30	507914.03	364630.00	2595.03
L31	508311.22	364629.17	2595.03
L32	508244.50	364696.09	2595.03
L33	507847.19	364697.19	2595.03
L34	507847.02	364630.18	2595.03
L35	508511.19	363967.02	2551.80
L36	508530.37	364108.61	2555.26
L37	508177.17	364543.51	2566.43
L38	508003.25	364544.78	2566.70
L39	508047.32	363999.50	2562.20

NOTES:

1. REFERENCE THE ORIGINAL CELL 15 DESIGN DRAWINGS (2001, WGI) FOR COORDINATES AND ELEVATIONS OF EXISING CELL FEATURES.
2. EXISTING TOPOGRAPHIC SURVEY PERFORMED BY ARROW LAND SURVEY IN MARCH 2008.
3. RETAIN AND PROTECT EXISTING SURVEY BENCHMARK LOCATIONS:

   BM 15-1 N 507,786.56 E 364,343.17 EL 2,582.01
   BM 15-2 N 508,802.45 E 364,344.72 EL 2,559.76
   BM 15-3 N 507,551.45 E 365,157.81 EL 2,570.09
   BM 15-4 N 508,870.87 E 365,170.73 EL 2,539.09

4. ELEVATIONS FOR INTERIOR CELL COORDINATES ARE TOP OF LCRS GEOMEMBRANE, AS SHOWN ON SECTION A, DRAWING 02.

REV	DATE	BY	DESCRIPTION
0	3/16/09	VJT	FOR CONSTRUCTION

PROFESSIONAL ENGINEER REGISTERED 3/16/09 11632 STATE OF IDAHO VAUGHN THURGOOD

US Ecology Idaho

an American Ecology company

PREPARED BY

AMERICAN GEO TECHNICS

5260 Chinden Blvd · Boise, Idaho 83714
Phone (208) 658-8700 · Fax (208) 658-8703

DRAWN BY	CHECKED BY	PROJECT NUMBER
VJT	RWH	07B-G1653

PROJECT NAME

CELL 15 – PHASE IV MODIFICATION
GRANDVIEW, IDAHO

PHASE IV LINER LAYOUT / PLAN VIEW

DRAWING NUMBER	REV
15-08-01	0

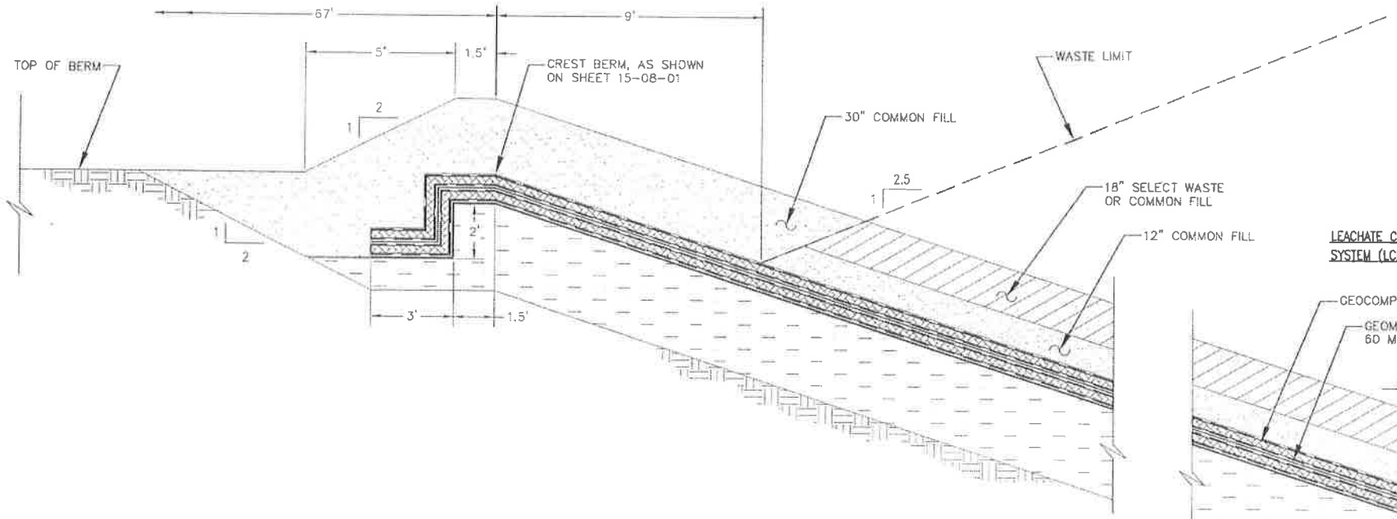

TYPICAL LINER SECTION (A / 01)

N.T.S.

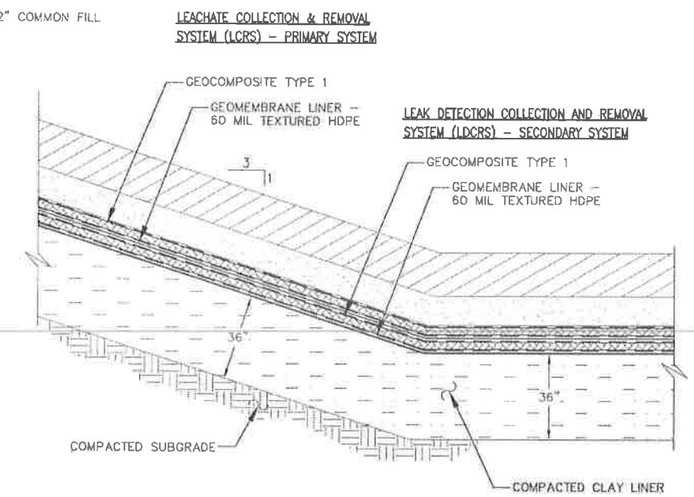

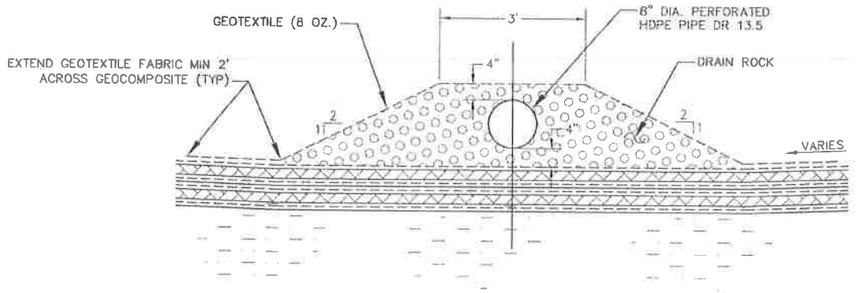

LCRS HEADER PIPE (B / 01)

N.T.S.

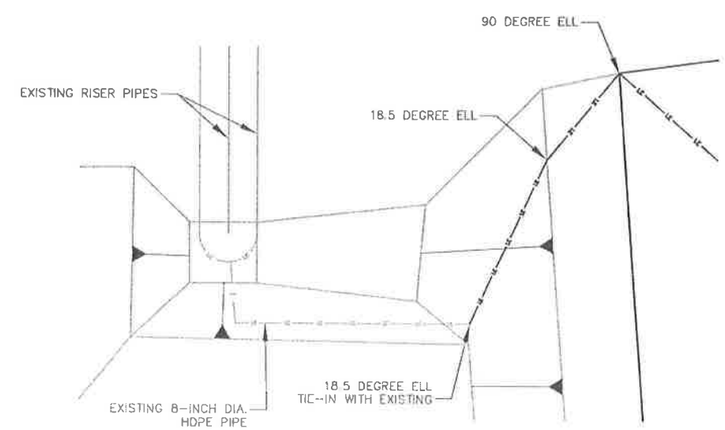

LEACHATE PIPE TIE-IN (1 / 01)

1" = 30'

REV	DATE	BY	DESCRIPTION
0	3/16/09	VJT	FOR CONSTRUCTION

PROFESSIONAL ENGINEER REGISTERED 11632 STATE OF IDAHO VAUGHN THURGOOD 3/16/09

US Ecology Idaho

an American Ecology company

PREPARED BY

AMERICAN GEO TECHNICS

5260 Chinden Blvd · Boise, Idaho 83714
Phone (208) 658-8700 · Fax (208) 658-8703

DRAWN BY	CHECKED BY	PROJECT NUMBER
VJT	RWH	07B-G1653

PROJECT NAME

CELL 15 – PHASE IV MODIFICATION
GRAND VIEW, IDAHO

CELL LINER SECTIONS

DRAWING NUMBER	REV
15-08-02	0

NOTES:

1. REFERENCE THE ORIGINAL CELL 15 DESIGN DRAWINGS (2001, WGI) FOR COORDINATES AND ELEVATIONS OF EXISING CELL FEATURES.

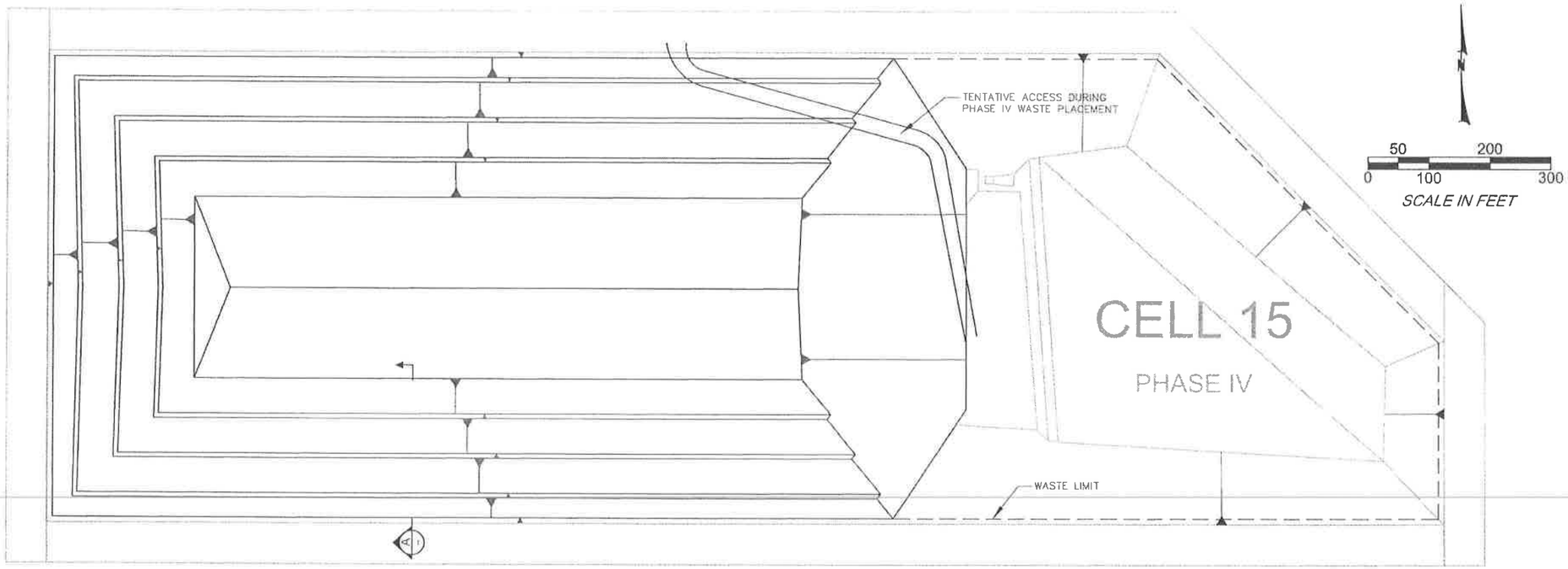

PHASE IV INTERIM

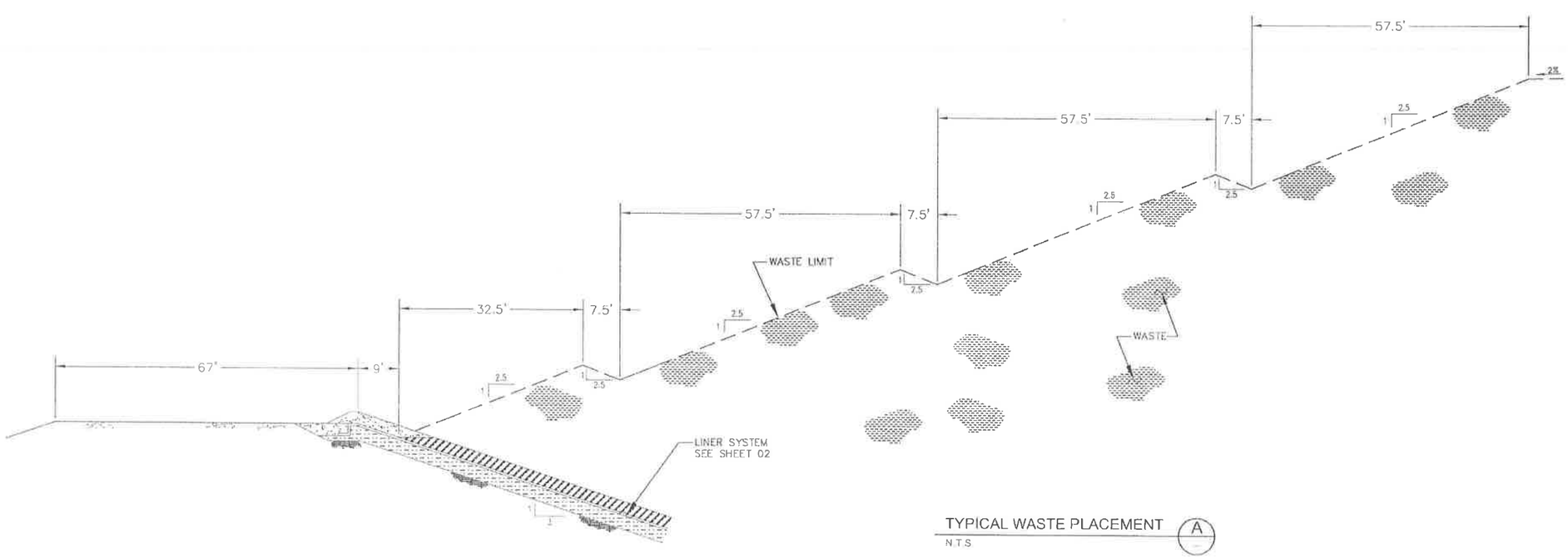

TYPICAL WASTE PLACEMENT (A)

N.T.S

REV	DATE	BY	DESCRIPTION
0	3/16/09	VJT	FOR CONSTRUCTION

PROFESSIONAL ENGINEER REGISTERED 3/16/09 11632 STATE OF IDAHO VAUGHN THURGOOD

US Ecology Idaho

an American Ecology company

PREPARED BY

AMERICAN GEO TECHNICS

5260 Chinden Blvd · Boise, Idaho 83714
Phone (208) 658-8700 · Fax (208) 658-8703

DRAWN BY	CHECKED BY	PROJECT NUMBER
VJT	RWH	07B-G1653

PROJECT NAME

CELL 15 – PHASE IV MODIFICATION
GRAND VIEW, IDAHO

INTERIM WASTE PLACEMENT

DRAWING NUMBER	REV
15-08-03	0

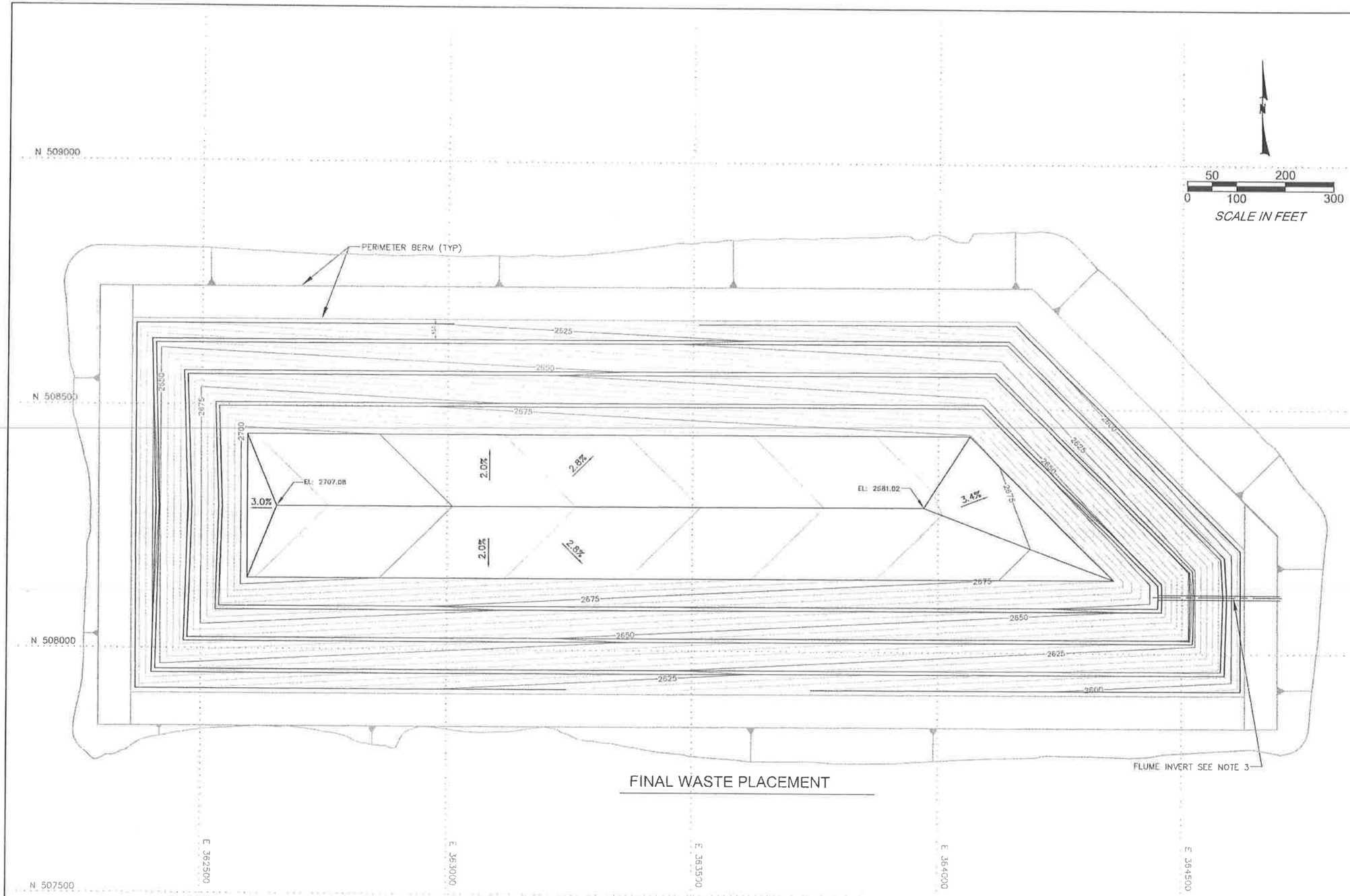

FINAL WASTE PLACEMENT

NOTES:

1. UPPER 12 INCHES OF WASTE MATERIAL TO BE SELECT 3" MINUS, FREE OF SHARP OBJECTS.
2. GRADE BENCHES TO DRAIN AT 5 PERECENT PRIOR TO PLACEMENT OF GEOSYTHETIC COVER MATERIALS. SEE SHEET 06.
3. RECESS WASTE ELEVATIONS IN THE VICINTY OF THE FLUME, AS NECESSARY, TO PROVIDE VERTICAL CLEARANCE WITH THE GEOSYNTHETIC COVER MATERIALS. SEE SECTION B ON SHEET 07.
4. WASTE CONTOUR ELEVATIONS ARE SHOWN IN 5 FOOT INTERVALS.

REV	DATE	BY	DESCRIPTION
0	3/16/09	VJT	FOR CONSTRUCTION

PROFESSIONAL ENGINEER REGISTERED 11632 STATE OF IDAHO RAUGH HUMGOOD 3/16/09

US Ecology Idaho

an American Ecology company

PREPARED BY

AMERICAN GEO TECHNICS

5260 Chinden Blvd · Boise, Idaho 83714
Phone (208) 658-8700 · Fax (208) 658-8703

DRAWN BY	CHECKED BY	PROJECT NUMBER
VJT	RWH	07B-G1653

PROJECT NAME

CELL 15 – PHASE IV MODIFICATION
GRAND VIEW, IDAHO

FINAL WASTE PLACEMENT

DRAWING NUMBER	REV
15-08-04	0

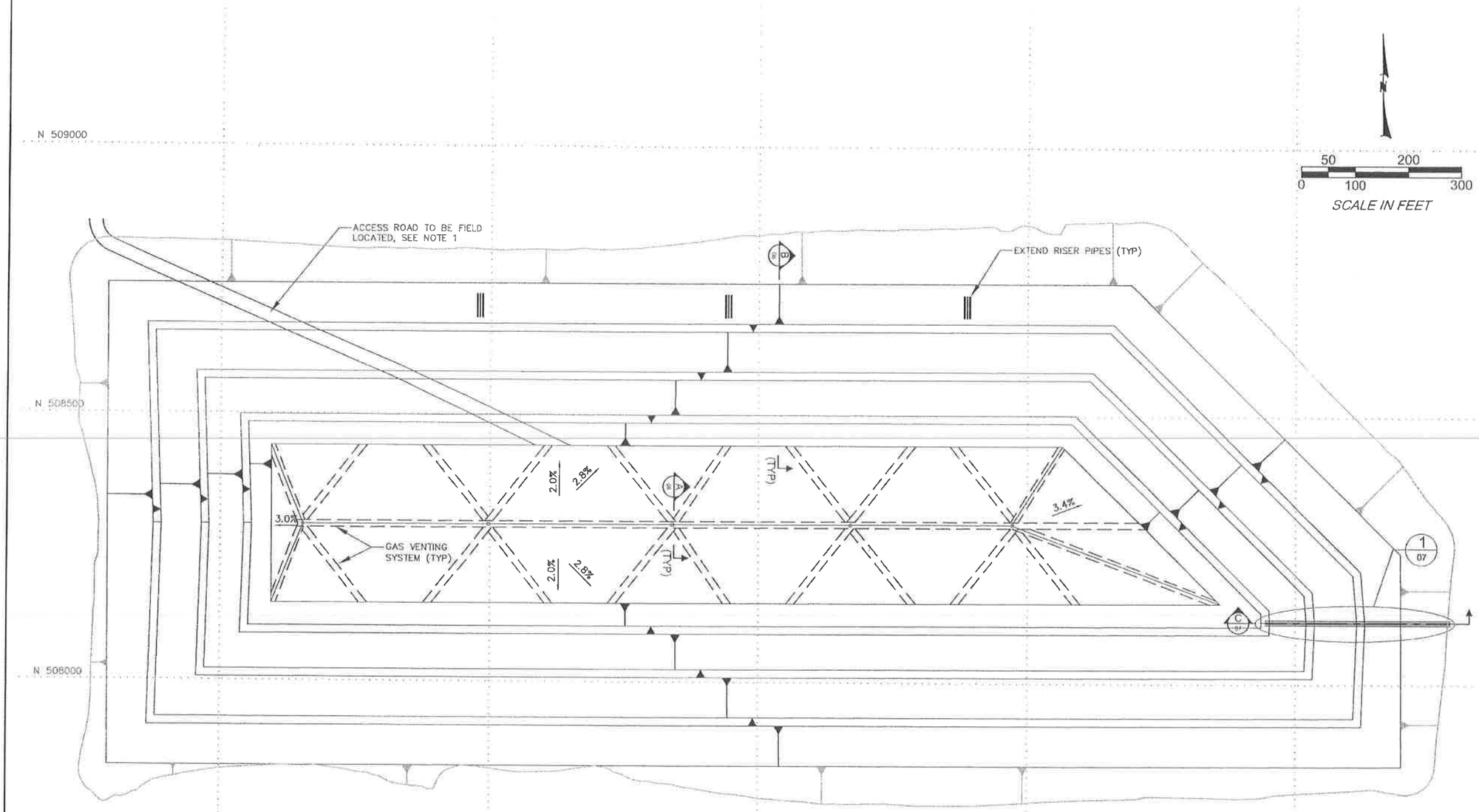

FINAL COVER GRADING PLAN

NOTES:

1. INSTALL 18" DIAMETER CORRUGATED CULVERTS AT EACH DRAIN CHANNEL CROSSING DURING CONSTRUCTION OF ACCESS ROAD.
2. MINOR ADJUSTMENTS TO CONTROL POINTS SHOWN WILL BE ACCEPTABLE IN ORDER TO MAKE CONTOUR LINES SMOOTH AND CONTINUOUS AND TO ELIMINATE SHARP CORNERS, AS APPROVED BY THE FIELD ENGINEER.
3. GAS VENTING SYSTEM CONSISTS OF 12' WIDE, TYPE 2, GEOCOMPOSITE PANELS. OVERLAP ADJOINING PANELS AT LEAST 2 FEET.

REV	DATE	BY	DESCRIPTION
0	3/16/09	VJT	FOR CONSTRUCTION

PROFESSIONAL ENGINEER REGISTERED 11632 STATE OF IDAHO VAUGHN THURGOOD 3/16/09

US Ecology Idaho

an American Ecology company

PREPARED BY:

AMERICAN GEO TECHNICS

5260 Chinden Blvd · Boise, Idaho 83714
Phone (208) 658-8700 · Fax (208) 658-8703

DRAWN BY	CHECKED BY	PROJECT NUMBER
VJT	RWH	07B-G1653

PROJECT NAME

CELL 15 – PHASE IV MODIFICATION
GRAND VIEW, IDAHO

FINAL COVER GRADING PLAN

DRAWING NUMBER	REV
15-08-05	0

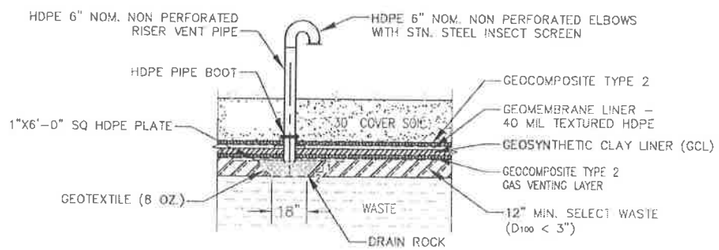

GAS VENTING SYSTEM (A / 05)
N.T.S.

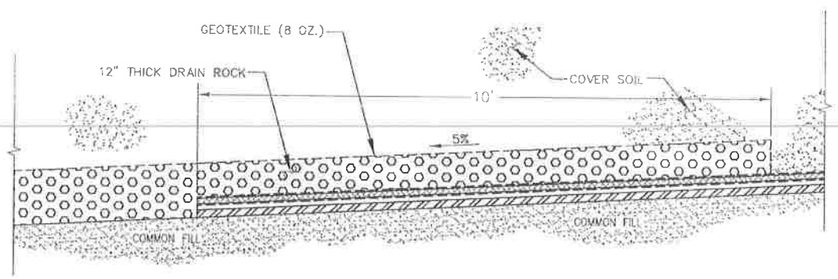

GEOSYNTHETIC COVER TERMINATION (1 / --)
N.T.S.

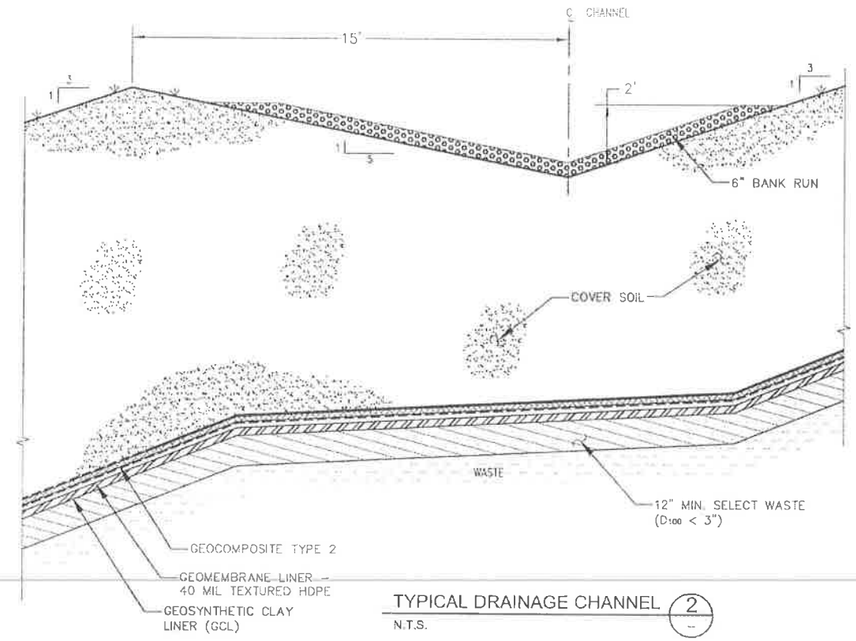

TYPICAL DRAINAGE CHANNEL (2 / --)
N.T.S.

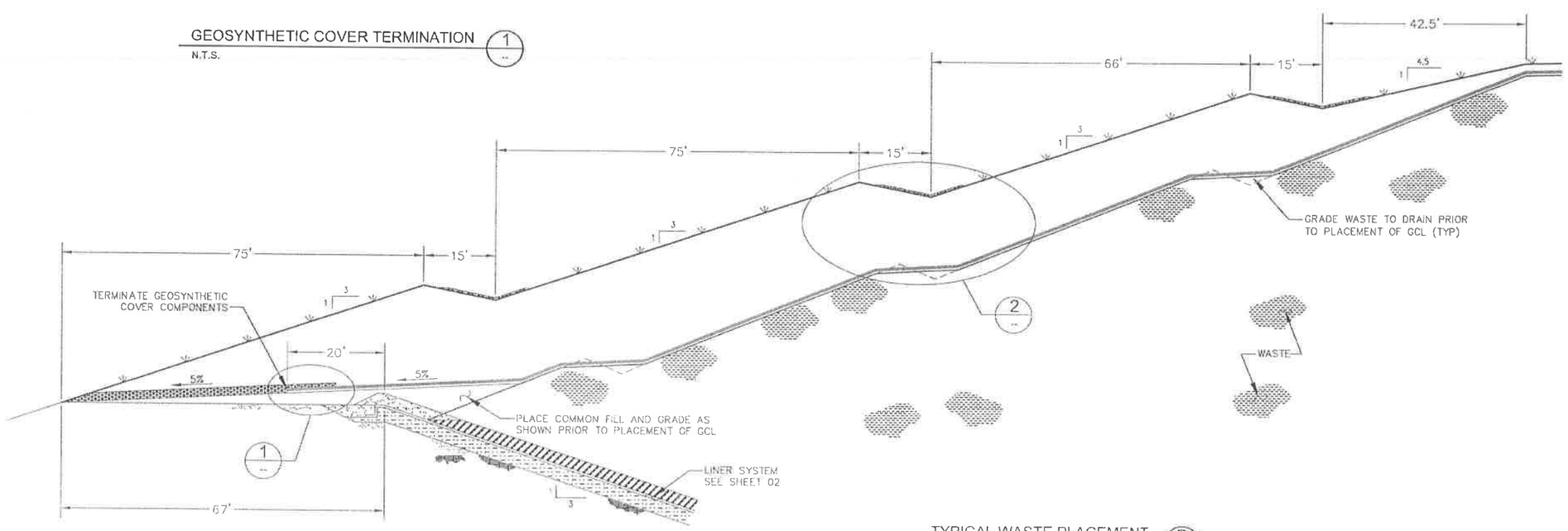

TYPICAL WASTE PLACEMENT (B / 05)
N.T.S.

REV	DATE	BY	DESCRIPTION
0	3/16/09	VJT	FOR CONSTRUCTION

PROFESSIONAL ENGINEER REGISTERED 3/16/09 14632 STATE OF IDAHO VAUGHN THURGOOD

US Ecology Idaho
an American Ecology company

PREPARED BY
AMERICAN GEO TECHNICS
5260 Chinden Blvd · Boise, Idaho 83714
Phone (208) 658-8700 · Fax (208) 658-8703

DRAWN BY	CHECKED BY	PROJECT NUMBER
VJT	RWH	07B-G1653

PROJECT NAME
CELL 15 – PHASE IV MODIFICATION
GRAND VIEW, IDAHO

FINAL COVER SECTIONS AND DETAILS

DRAWING NUMBER 15-08-06
REV 0

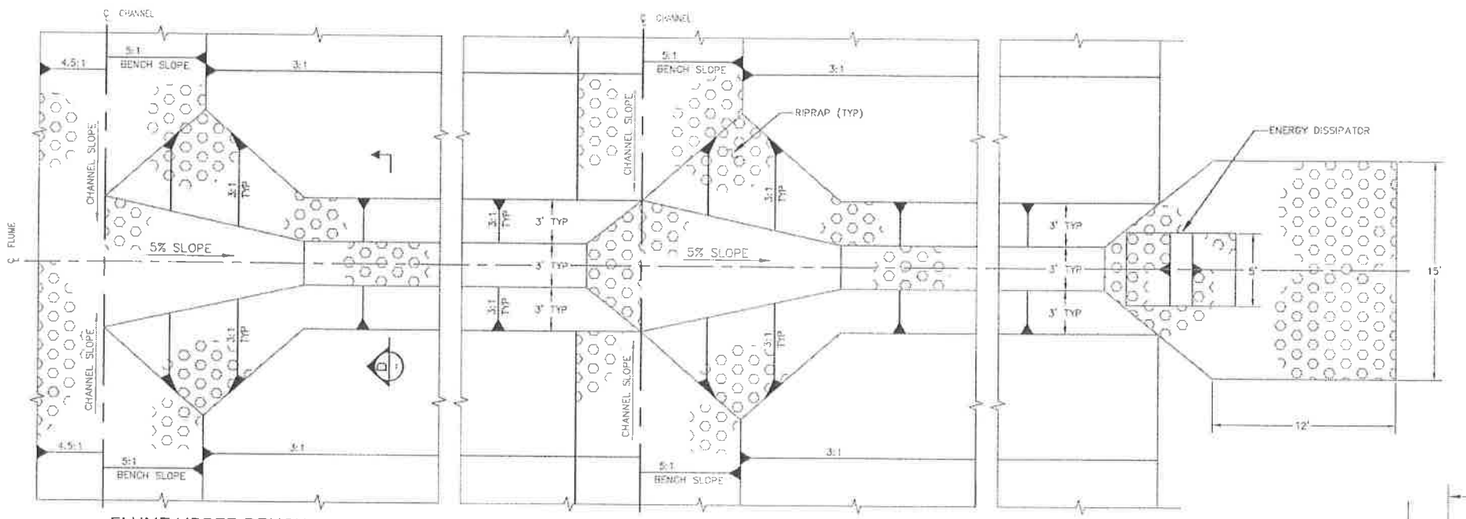

FLUME UPPER BENCH

FLUME INTERMEDIATE BENCH (TYP)

FLUME BASE

FLUME DETAIL 1/05
N.T.S.

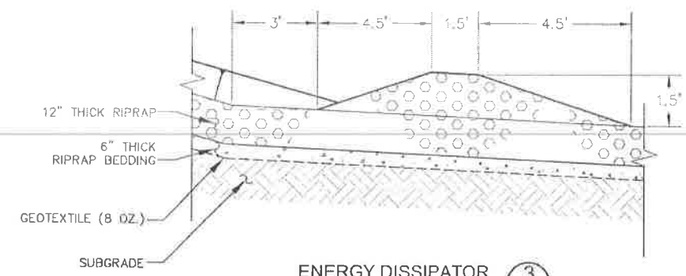

ENERGY DISSIPATOR 3/--
N.T.S.

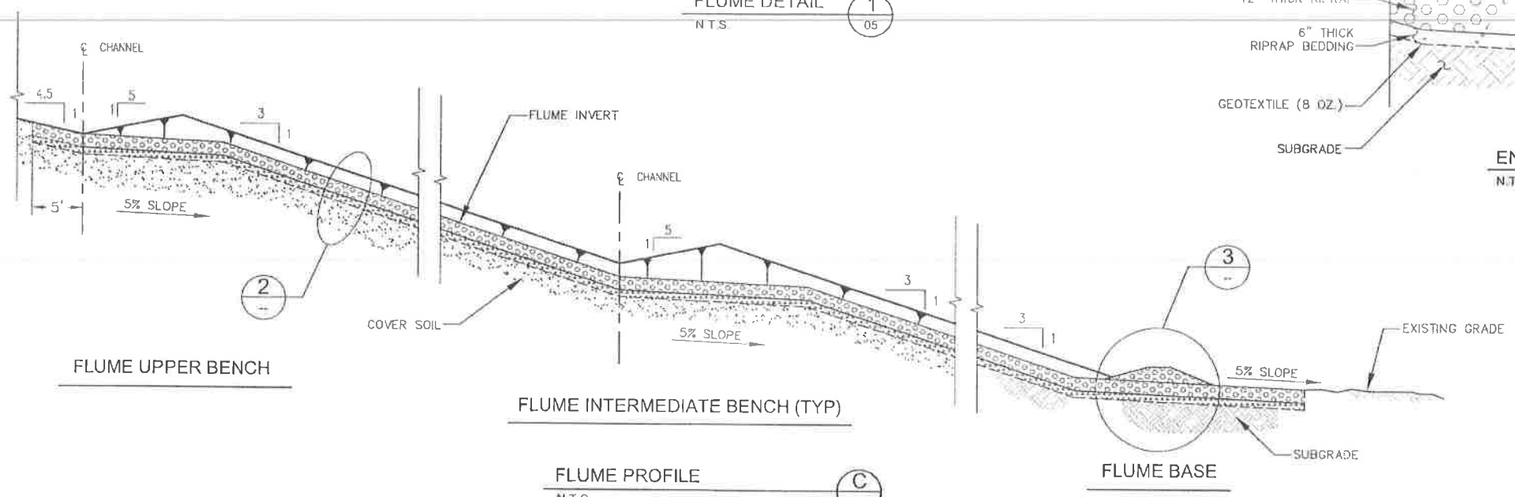

FLUME UPPER BENCH

FLUME INTERMEDIATE BENCH (TYP)

FLUME BASE

FLUME PROFILE C/05
N.T.S.

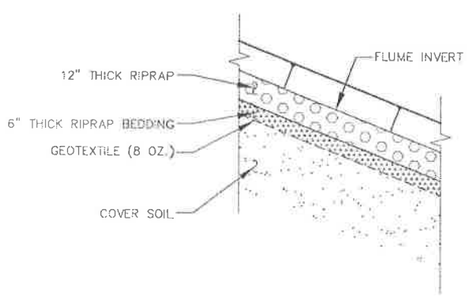

COVER AT FLUME LOCATION 2/--
N.T.S.

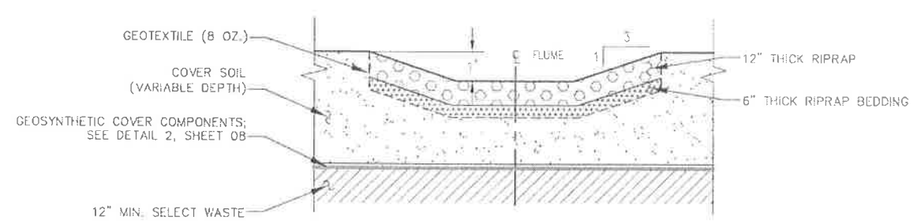

FLUME SECTION D/--
N.T.S.

REV	DATE	BY	DESCRIPTION
0	3/16/09	VJT	FOR CONSTRUCTION

PROFESSIONAL ENGINEER REGISTERED 11632 STATE OF IDAHO VAUGHN THURGOOD 3/16/09

US Ecology Idaho
an American Ecology company

PREPARED BY
AMERICAN GEO TECHNICS
5260 Chinden Blvd · Boise, Idaho 83714
Phone (208) 658-8700 · Fax (208) 658-8703

DRAWN BY	CHECKED BY	PROJECT NUMBER
VJT	RWH	07B-G1653

PROJECT NAME
CELL 15 – PHASE IV MODIFICATION
GRAND VIEW, IDAHO

FLUME SECTIONS AND DETAILS

DRAWING NUMBER	REV
15-08-07	0

SHEET #	DRAWING DESCRIPTION
16-11-00	DRAWING INDEX / COVER SHEET
16-11-01	CELL LINER LAYOUT / PLAN VIEW 1
16-11-02	CELL LINER LAYOUT / PLAN VIEW 2
16-11-03	CELL LINER / SECTIONS AND DETAILS
16-11-04	CONSTRUCTION PHASING AND WASTE PLACEMENT
16-11-05	INTERIM STORM WATER CONTROL DETAILS
16-11-06	SUMPS AND RISERS / SECTIONS AND DETAILS
16-11-07	LEACHATE PIPE / SECTIONS AND DETAILS
16-11-08	WASTE PLACEMENT / SECTIONS AND DETAILS

GENERAL NOTES

1. DIMENSION LABELS HAVE PRECEDENCE OVER SCALED DIMENSIONS.
2. ANY DISCREPANCIES SHALL BE BROUGHT TO THE ATTENTION OF THE ENGINEER.
3. INTERNAL REFERENCES TO DRAWING NUMBERS WITHIN THIS SET HAVE BEEN ABBREVIATED FOR SIMPLICITY (E.G. DRAWING 16-11-06 IS REFERENCED AS DRAWING 06).
4. SURVEY OF EXISTING TOPOGRAPHY WITHIN CELL 16 FOOTPRINT PERFORMED BY ARROW SURVEY IN MARCH 2008.
5. CONTRACTOR SHALL COMPLY WITH THE CLEAN WATER ACT NATIONAL POLLUTION DISCHARGE ELIMINATION SYSTEM (NPDES). THE CONTRACTOR MUST FILE A NOTICE OF INTENT (NOI) WITH THE EPA AND IMPLEMENT AN APPROVED STORM WATER POLLUTION PREVENTION (SWPP) PLAN FOR THE INTERIM CONSTRUCTION CONDITIONS. THE OWNER'S SURFACE WATER MANAGEMENT PLAN WILL ADDRESS LONG-TERM CONSIDERATIONS FOR SEDIMENTATION CONTROL.

CELL 16 SURVEY CONTROL POINTS

BM ID.	EASTING (FT)	NORTHING (FT)	ELEVATION (FT)	NOTES
16-1	362,173.35	508,251.75	2,652.86	5/8" ROD
16-2	361,964.15	509,451.56	2,601.21	5/8" ROD
16-3	360,020.25	508,858.37	2,590.88	BRASS CAP
16-4	360,078.90	511,490.94	2,582.46	BRASS CAP
16-5	361,893.38	511,499.82	2,527.44	ALUM CAP

LEGEND

- CUT
- FILL
- 3.5% GRADE & DIRECTION OF DRAINAGE
- SURVEY CONTROL POINT
- POWER POLE
- U-2 WELL
- FENCE LINE
- LEACHATE PIPE
- PROPERTY BOUNDARY
- UNIMPROVED ROAD
- 2550 EXISTING TOPOGRAPHY
- CULVERT
- CUT/FILL INTERFACE
- DRAINAGE CHANNEL

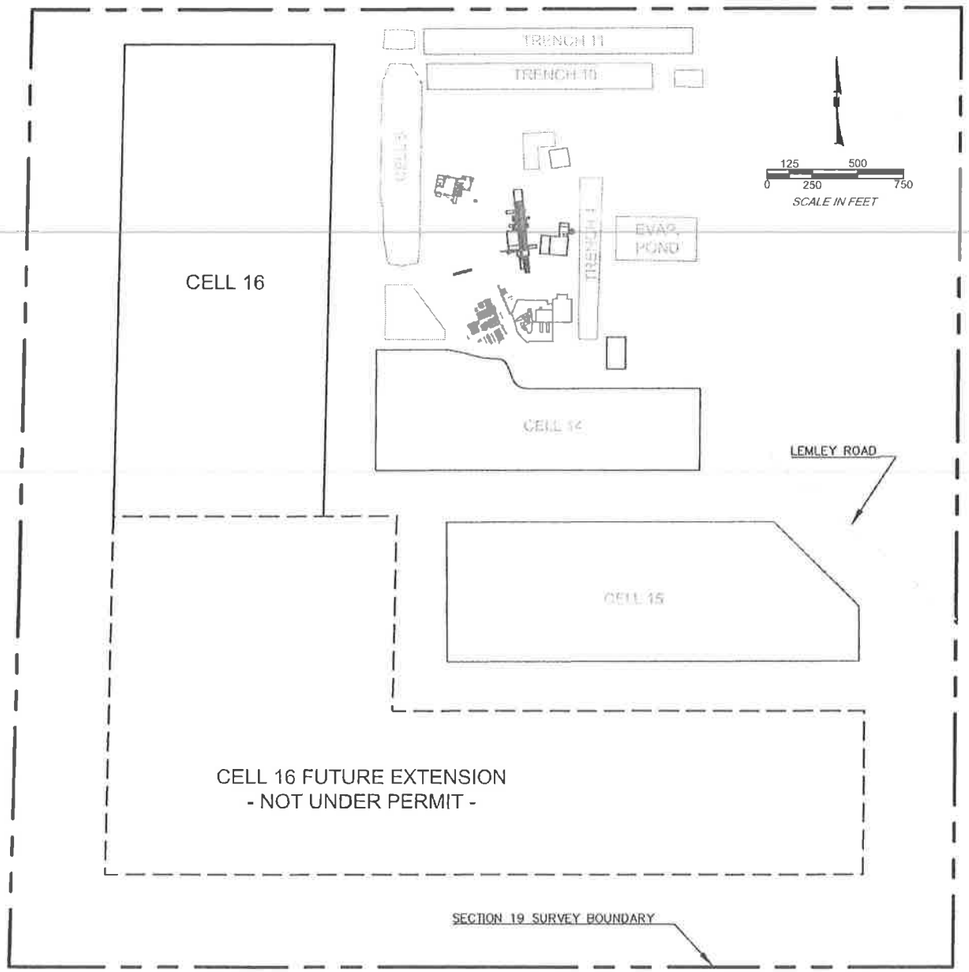

FACILITY SITE MAP

REV	DATE	BY	DESCRIPTION
0	2/8/12	VJT	ISSUED FOR CONSTRUCTION

PROFESSIONAL ENGINEER REGISTERED 2/10/12 11632 STATE OF IDAHO VAUGHN THURGOOD

Vaughn Thurgood

US Ecology Idaho
an American Ecology company

PREPARED BY
AMERICAN GEO TECHNICS
5260 Chinden Blvd · Boise, Idaho 83714
Phone (208) 658-8700 · Fax (208) 658-8703

DRAWN BY	CHECKED BY	PROJECT NUMBER
VJT	RWH	07B-G1654

PROJECT NAME
CELL 16 LANDFILL UNIT
GRANDVIEW, IDAHO

DRAWING INDEX
COVER SHEET

DRAWING NUMBER 16-11-00 REV 0

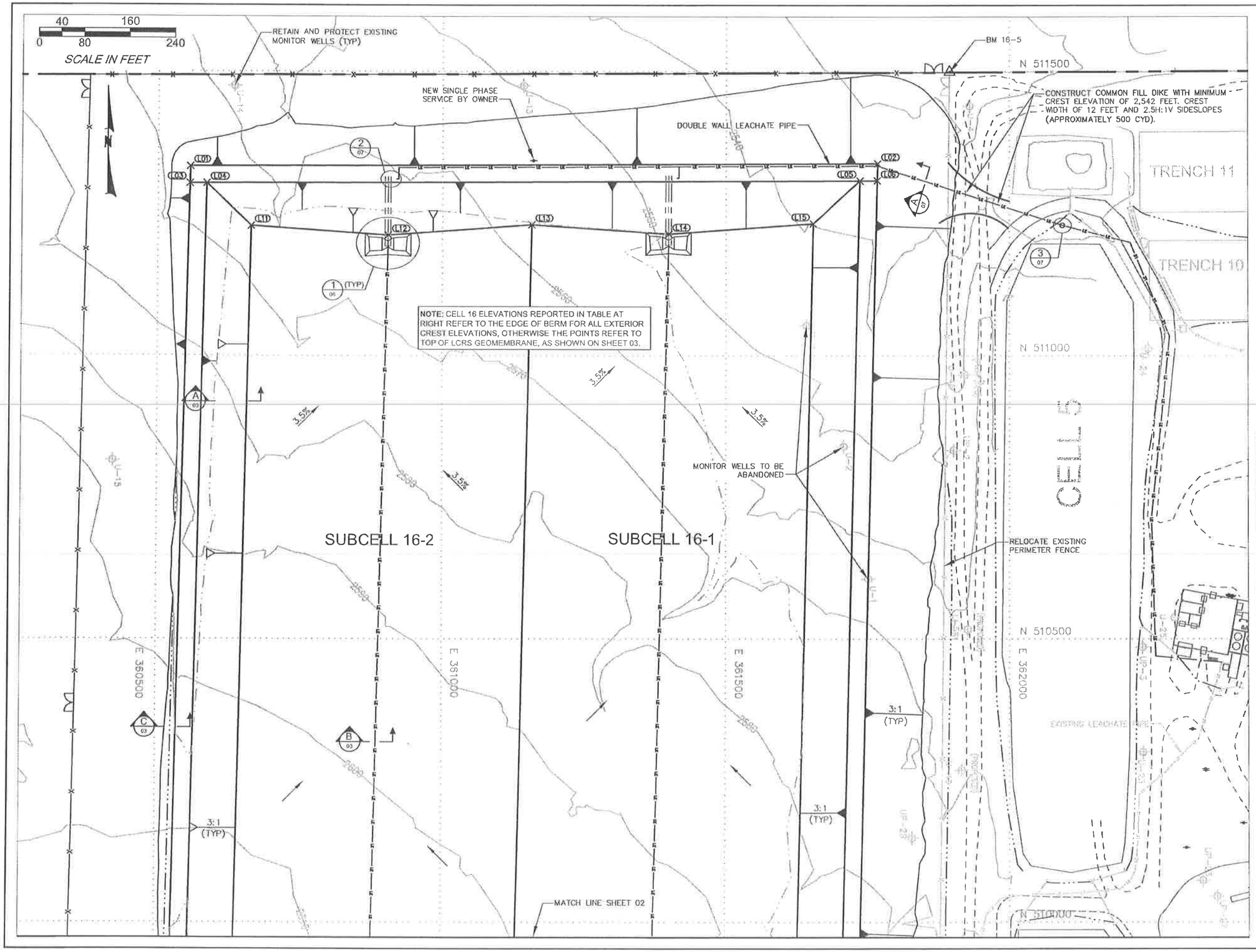

Cell 16 Point Table

POINT #	NORTHING	EASTING	ELEVATION
L01	511332.94	360555.82	2580.00
L02	511338.09	361765.81	2580.00
L03	511302.94	360555.20	2580.00
L04	511303.06	360585.20	2580.00
L05	511307.96	361735.19	2580.00
L06	511308.09	361765.19	2580.00
L07	508502.94	360496.90	2650.00
L08	508503.06	360526.90	2650.00
L09	508507.96	361676.89	2650.00
L10	508508.09	361706.89	2650.00
L11	511228.40	360664.14	2555.00
L12	511212.20	360904.83	2549.26
L13	511230.50	361158.49	2555.00
L14	511214.31	361399.17	2549.26
L15	511232.61	361652.83	2555.00
L16	508503.41	360607.40	2623.12
L17	508504.43	360848.45	2616.95
L18	508505.51	361101.75	2623.12
L19	508506.54	361342.79	2616.95
L20	508507.62	361596.10	2623.12

REV	DATE	BY	DESCRIPTION
0	2/8/12	VJT	ISSUED FOR CONSTRUCTION

PROFESSIONAL ENGINEER
REGISTERED
2/10/12
11632
STATE OF IDAHO
VAUGHN THURGOOD

Vaughn Thurgood

US Ecology Idaho
an American Ecology company

PREPARED BY
AMERICAN GEO TECHNICS
5260 Chinden Blvd · Boise, Idaho 83714
Phone (208) 658-8700 · Fax (208) 658-8703

DRAWN BY	CHECKED BY	PROJECT NUMBER
VJT	RWH	07B-G1654

PROJECT NAME
CELL 16 LANDFILL UNIT
GRANDVIEW, IDAHO

CELL LINER LAYOUT
PLAN VIEW 1

DRAWING NUMBER 16-11-01
REV 0

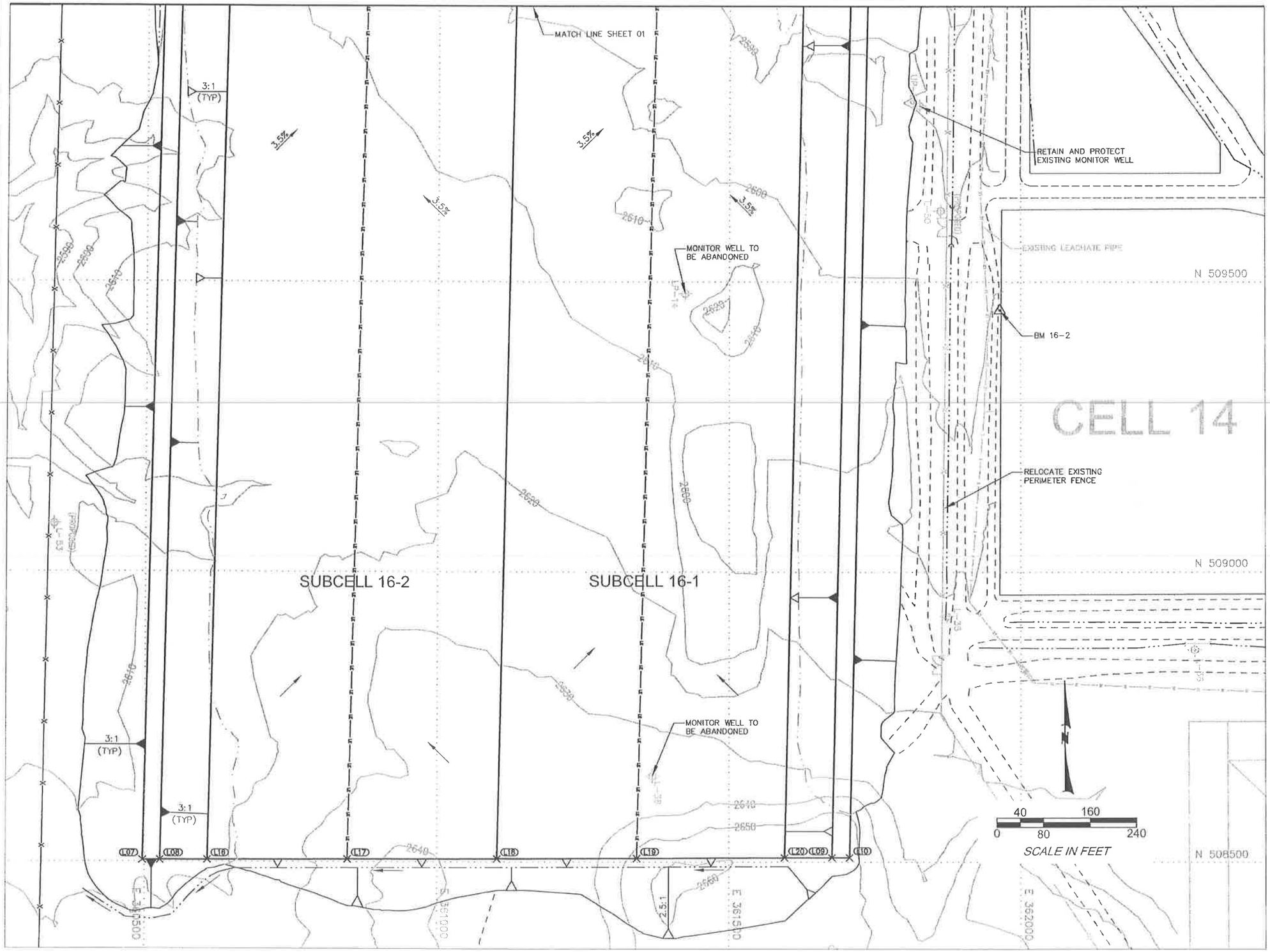

NOTES:

1. SEE SHEET 01 FOR CONTROL POINT COORDINATE TABLE.

REV	DATE	BY	DESCRIPTION
0	2/8/12	VJT	ISSUED FOR CONSTRUCTION

PROFESSIONAL ENGINEER
REGISTERED
2/10/12
11632
STATE OF IDAHO
VAUGHN THURGOOD

US Ecology Idaho
an American Ecology company

PREPARED BY
AMERICAN GEO TECHNICS
5260 Chinden Blvd · Boise, Idaho 83714
Phone (208) 658-8700 · Fax (208) 658-8703

DRAWN BY	CHECKED BY	PROJECT NUMBER
VJT	RWH	07B-G1654

PROJECT NAME
CELL 16 LANDFILL UNIT
GRANDVIEW, IDAHO

CELL LINER LAYOUT
PLAN VIEW 2

DRAWING NUMBER 16-11-02
REV 0

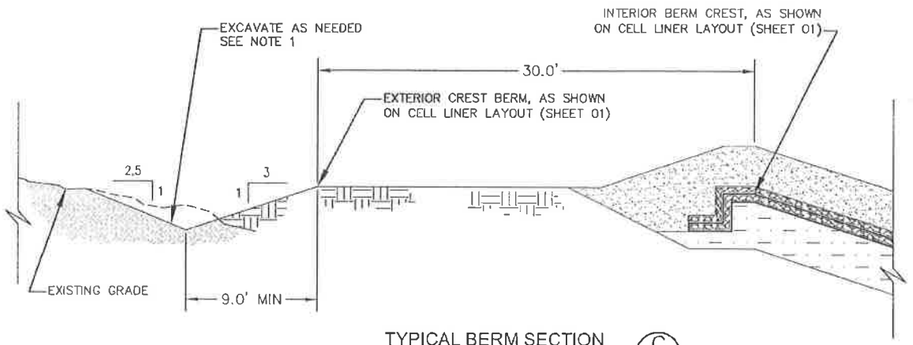

TYPICAL BERM SECTION (C / 01)
N.T.S.

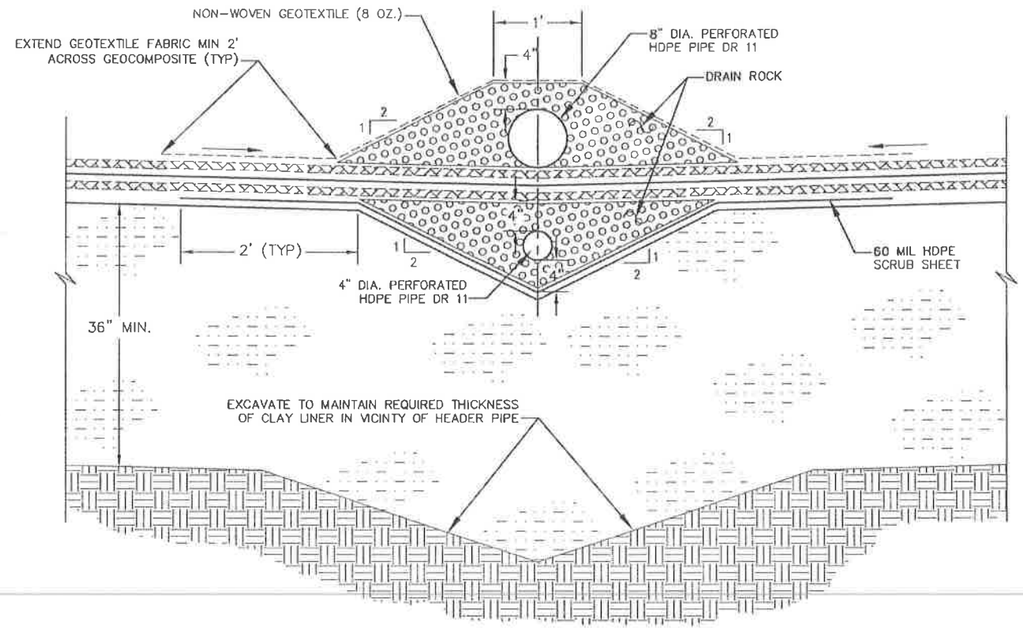

LCRS & LDCRS HEADER PIPES (B / 01)
N.T.S.

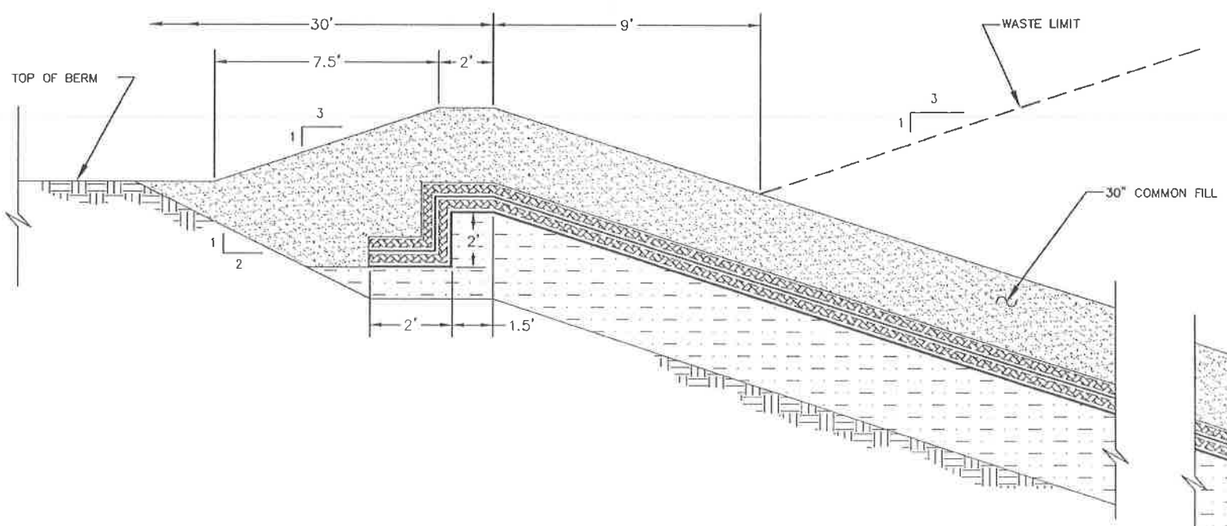

TYPICAL LINER AND ANCHOR TRENCH SECTION (A / 01)
N.T.S.

LEACHATE COLLECTION & REMOVAL SYSTEM (LCRS) – PRIMARY CONTAINMENT

LEAK DETECTION COLLECTION AND REMOVAL SYSTEM (LDCRS) – SECONDARY CONTAINMENT

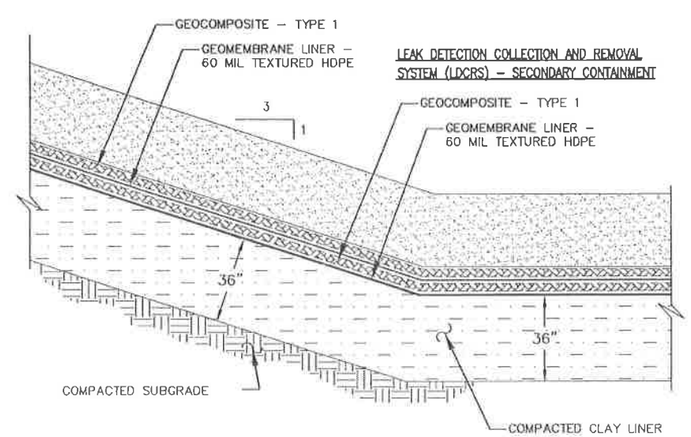

NOTES:

1. EXCAVATE EXTERIOR SHOULDER OF BERM, AS NECESSARY, TO MAINTAIN AT LEAST 3 FEET OF VERITCAL BERM REVEAL (9 FEET OF HORIZONTAL SLOPE).
2. ALL GEOMBRANE PANELS INSTALLED ALONG SIDESLOPES MUST BE TEXTURED. GEOMEMBRANE PANELLS INSTALLED ACROSS THE FLOOR OF THE CELL MAY BE SMOOTH OR TEXTURED.

REV	DATE	BY	DESCRIPTION
0	2/8/12	VJT	ISSUED FOR CONSTRUCTION

PROFESSIONAL ENGINEER
REGISTERED
2/10/12
11632
STATE OF IDAHO
VAUGHN THURGOOD

Vaughn Thurgood

US Ecology Idaho
an American Ecology company

PREPARED BY
AMERICAN GEO TECHNICS
5260 Chinden Blvd · Boise, Idaho 83714
Phone (208) 658-8700 · Fax (208) 658-8703

DRAWN BY	CHECKED BY	PROJECT NUMBER
VJT	RWH	07B-G1654

PROJECT NAME
CELL 16 LANDFILL UNIT
GRANDVIEW, IDAHO

CELL LINER
SECTIONS AND DETAILS

DRAWING NUMBER	REV
16-11-03	0

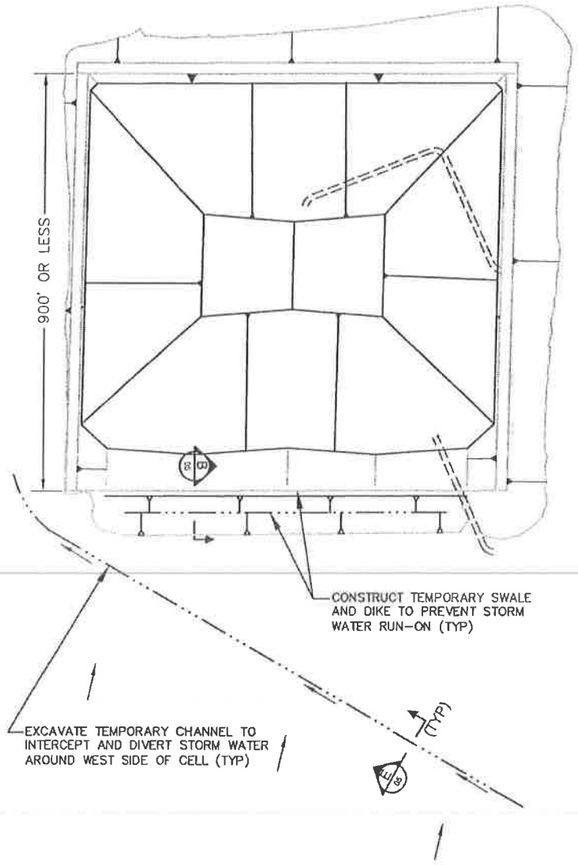

INITIAL OPERATIONAL PHASE (1)
N.T.S.

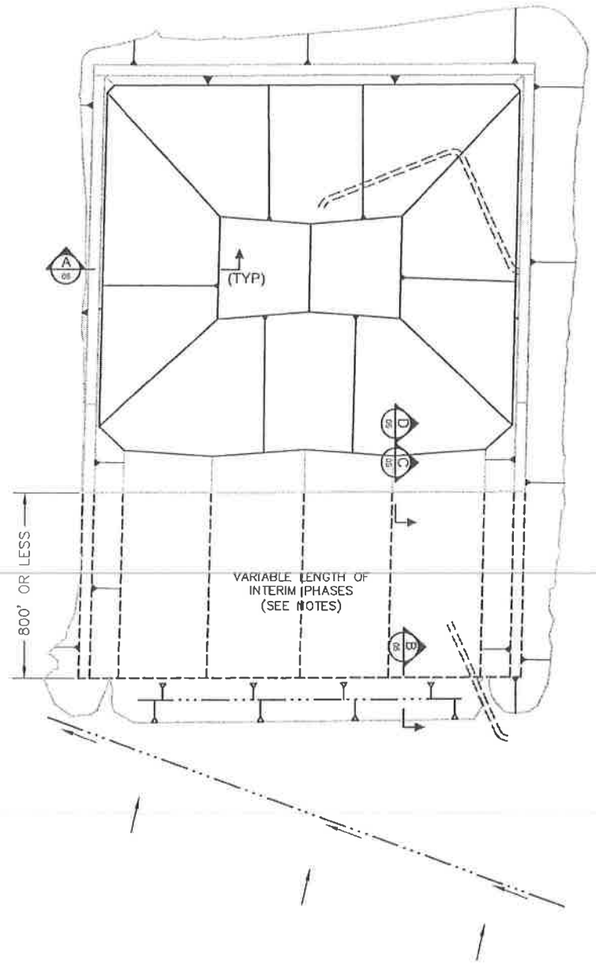

INTERIM CONSTRUCTION PHASE (2)
N.T.S.

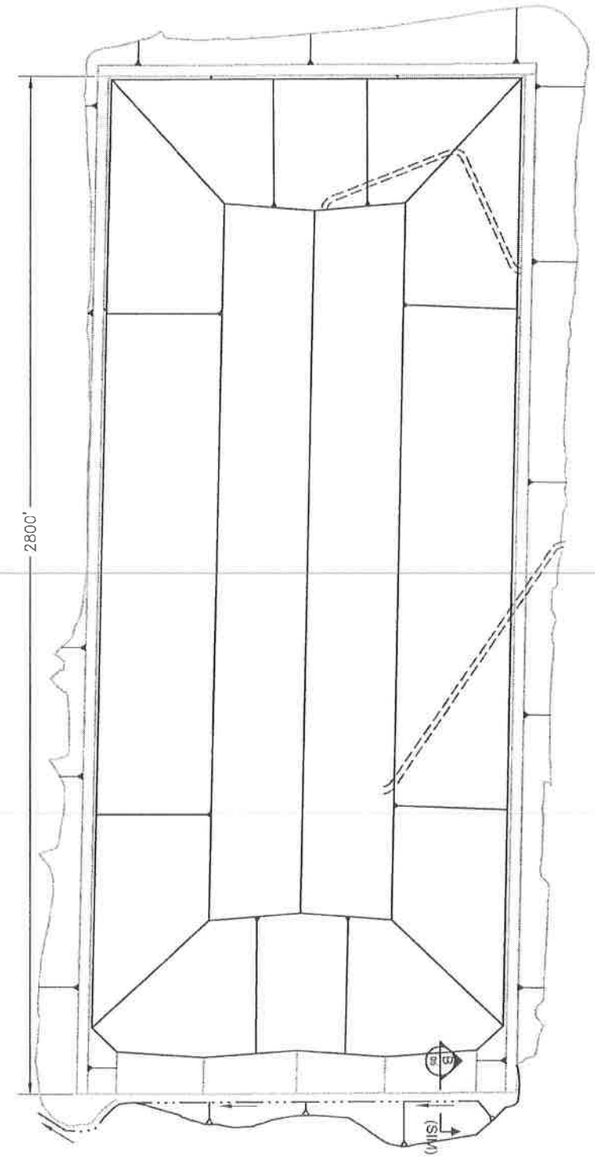

MAXIMUM OPERATIONAL PHASE (3)
N.T.S.

NOTES:

1. CELL LINER CONSTRUCTION TO BE PERFORMED IN PHASED INTERVALS.
2. THE LENGTH OF EACH PHASE, MEASURED IN THE NORTH / SOUTH DIRECTION, IS VARIABLE WITH A SET MAXIMUM VALUE.
3. THE LENGTH OF THE INITIAL PHASE IS LIMITED TO 900 FEET OR LESS. THE LENGTH OF SUBSEQUENT INTERIM PHASES ARE LIMITED TO 800 FEET OR LESS.
4. WASTE MATERIALS SHOULD BE PLACED IN CONTINUOUS HORIZONTAL LIFTS WITHIN EACH PHASE, PROCEEDING FROM BOTTOM TO TOP.
5. WASTE PLACEMENT IN PREVIOUS PHASES MUST HAVE A NOMINAL DEPTH OF 20 FEET, EXCLUDING THE REQUIRED WASTE SET-BACK ZONE, PRIOR TO CONSTRUCTION OF AN ADDITIONAL PHASE.
6. THE MAXIMUM OVERALL LENGTH OF THE CELL, IS LIMITED TO 2,800 FEET.

REV	DATE	BY	DESCRIPTION
0	2/8/12	VJT	ISSUED FOR CONSTRUCTION

PROFESSIONAL ENGINEER REGISTERED 11632 STATE OF IDAHO VAUGHN THURGOOD
2/10/12

US Ecology Idaho
an American Ecology company

PREPARED BY
AMERICAN GEO TECHNICS
5260 Chinden Blvd · Boise, Idaho 83714
Phone (208) 658-8700 · Fax (208) 658-8703

DRAWN BY	CHECKED BY	PROJECT NUMBER
VJT	RWH	07B-G1654

PROJECT NAME
CELL 16 LANDFILL UNIT
GRANDVIEW, IDAHO

CONSTRUCTION PHASING AND WASTE PLACEMENT

DRAWING NUMBER	REV
16-11-04	B

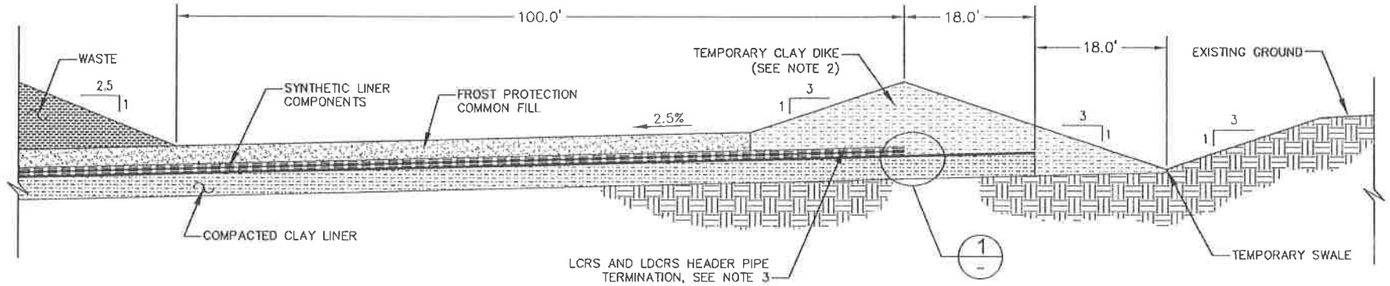

TYPICAL PHASE TERMINATION (B/04)

N.T.S.

NOTES:

1. WASTE PILE IS SET BACK AT LEAST 100 FEET FROM THE TEMPORARY CLAY DIKE CREST ON THE SOUTH END OF THE CELL.
2. CREST OF TEMPORARY CLAY DIKE CONSTRUCTED TO AN ELEVATION AT LEAST 9 FEET ABOVE THE LCRS HEADER PIPE INVERT, MEASURED NEAR THE LINER TERMINATION.
3. EXTEND LCRS HEADER PIPE TO WITHIN 10± FEET OF THE SYNTHETIC LINER TERMINATION. EXTEND LDCRS HEADER PIPE TO WITHIN 5± FEET OF THE SYNTHETIC LINER TERMINATION. COVER PIPE ENDS WITH A TEMPORARY BLIND FLANGE.
4. DURING CONSTRUCTION THE CONTRACTOR IS RESPONSIBLE FOR PREVENTING STORM RELATED RUN-ON FROM ENTERING THE OPERATIONAL AREA OF THE LANDFILL. THE CONTRACTOR MUST BE EQUIPED TO REMOVE RUN-OFF GENERATED WITHIN THE CONSTRUCTION EXPANSION AREA.
5. REMOVAL OF THE TEMPORARY CLAY DIKE AND SUBSEQUENT TIE-IN WITH THE LDCRS & LCRS GEOCOMPOSITE LAYERS SHALL NOT OCCUR UNTIL SUFFICIENT FROST PROTECTION MATERIALS ARE IN PLACE, AS APPROVED BY THE ENGINEER.

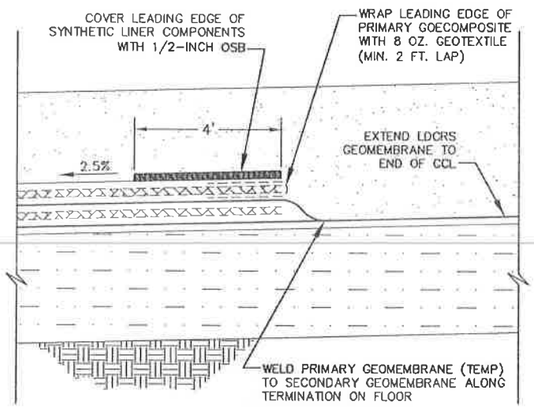

SYNTHETIC LINER TERMINATION (1/--)

N.T.S.

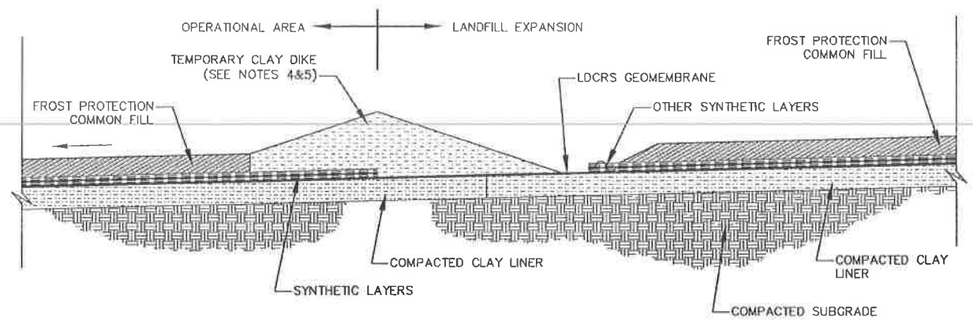

INTERIM LINER TIE-IN (C/04)

N.T.S.

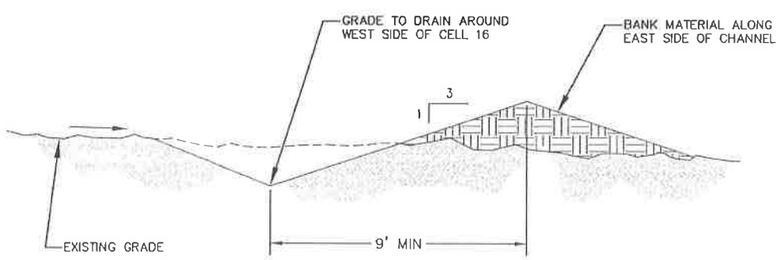

TEMPORARY CHANNEL (E/04)

N.T.S.

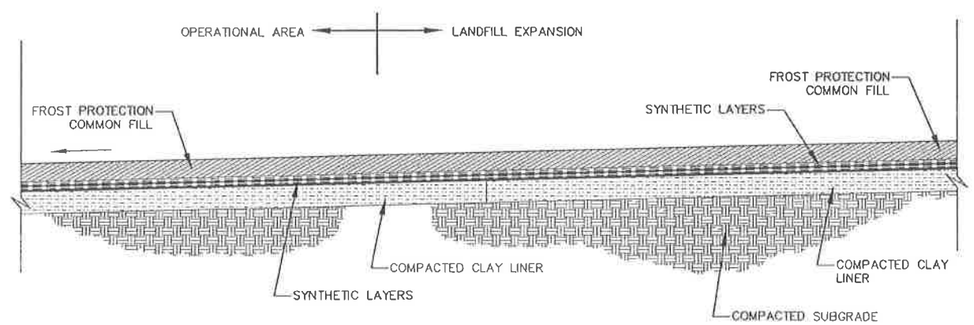

COMPLETED LINER TIE-IN (D/04)

N.T.S.

REV	DATE	BY	DESCRIPTION
0	2/8/12	VJT	ISSUED FOR CONSTRUCTION

PROFESSIONAL ENGINEER REGISTERED 11632 STATE OF IDAHO VAUGHN THURGOOD

2/10/12

US Ecology Idaho

an American Ecology company

PREPARED BY

AMERICAN GEO TECHNICS

5260 Chinden Blvd · Boise, Idaho 83714
Phone (208) 658-8700 · Fax (208) 658-8703

DRAWN BY	CHECKED BY	PROJECT NUMBER
VJT	RWH	07B-G1654

PROJECT NAME

CELL 16 LANDFILL UNIT
GRANDVIEW, IDAHO

INTERIM STORM WATER CONTROL DETAILS

DRAWING NUMBER 16-11-05

REV B

SUBCELL 16-2 SUMP COORDINATES			
POINT ID.	NORTHING (FT)	EASTING (FT)	ELEVATION* (FT)
S01	511,214.95	360,864.05	2,550.23
S02	511,174.95	360,864.05	2,551.21
S03	511,174.95	360,944.05	2,551.17
S04	511,215.03	360,944.05	2,550.15
S05	511,208.97	360,870.49	2,548.23
S06	511,183.99	360,872.44	2,548.19
S07	511,184.15	360,935.57	2,548.11
S08	511,209.00	360,937.59	2,548.15
S09	511,207.66	360,894.05	2,547.76
S10	511,185.25	360,894.05	2,547.76
S11	511,185.47	360,914.05	2,547.68
S12	511,207.49	360,914.05	2,547.68
S13	511,191.24	360,904.05	2,545.76
S14	511,201.70	360,904.05	2,545.76
S15	511,178.19	360,904.12	2,550.11

*ELEVATIONS REFER TO TOP OF LCRS GEOMEMBRANE

SUBCELL 16-1 SUMP COORDINATES			
POINT ID.	NORTHING (FT)	EASTING (FT)	ELEVATION* (FT)
S01	511,217.05	361,358.40	2,550.23
S02	511,177.05	361,358.40	2,551.21
S03	511,177.05	361,438.40	2,551.17
S04	511,217.14	361,438.40	2,550.15
S05	511,211.08	361,364.84	2,548.23
S06	511,186.09	361,366.79	2,548.19
S07	511,186.25	361,429.91	2,548.11
S08	511,211.11	361,431.94	2,548.15
S09	511,209.76	361,388.40	2,547.76
S10	511,187.36	361,388.40	2,547.76
S11	511,187.57	361,408.40	2,547.68
S12	511,209.60	361,408.40	2,547.68
S13	511,193.34	361,398.40	2,545.76
S14	511,203.81	361,398.40	2,545.76
S15	511,180.30	361,398.47	2,550.11

*ELEVATIONS REFER TO TOP OF LCRS GEOMEMBRANE

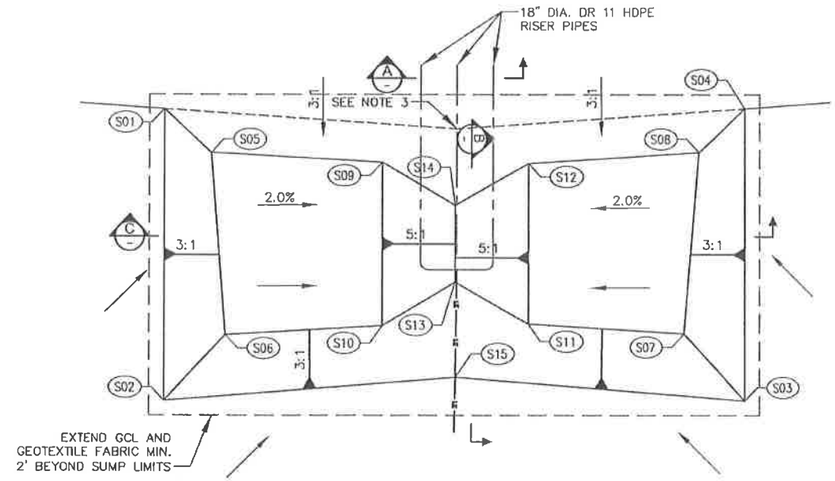

TYPICAL SUMP LAYOUT (1/01)
N.T.S.

NOTES:

1. LOWER PORTIONS OF LCRS AND LDCRS RISER PIPES, LOCATED WITHIN THE SUMP, TO BE PERFORATED IN ACCORDANCE WITH PROJECT SPECIFICATIONS.
2. INSTALL ALL LEACHATE PUMPS DURING THE INITIAL PHASE OF CONSTRUCTION.
3. LEADER INDICATES LOCATION OF POINT L12 & L14 FROM SHEET 02 WHICH IS SHOWN FOR CLARITY ONLY. THESE POINTS IMPOSE IMAGINARY GRADE BREAKS AT THIS LOCATION.

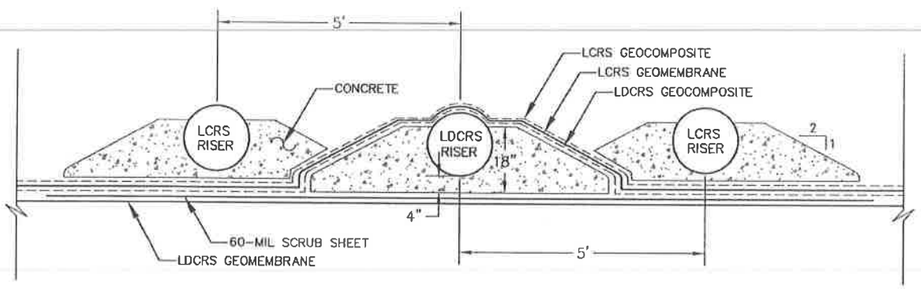

RISER PIPE SECTION (A)
N.T.S.

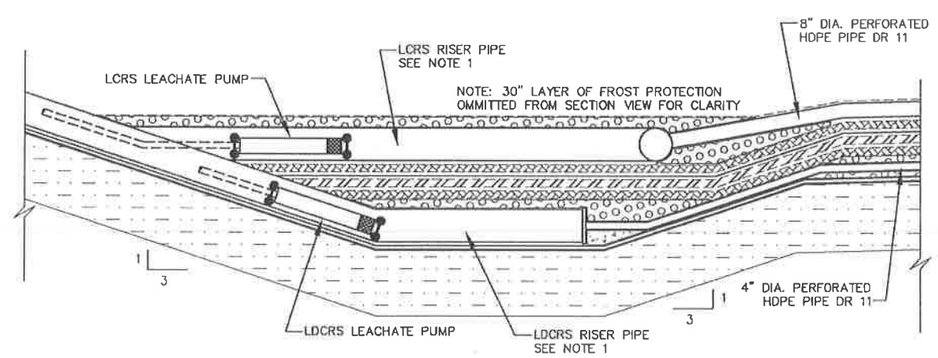

SUMP N-S SECTION (B)
N.T.S.

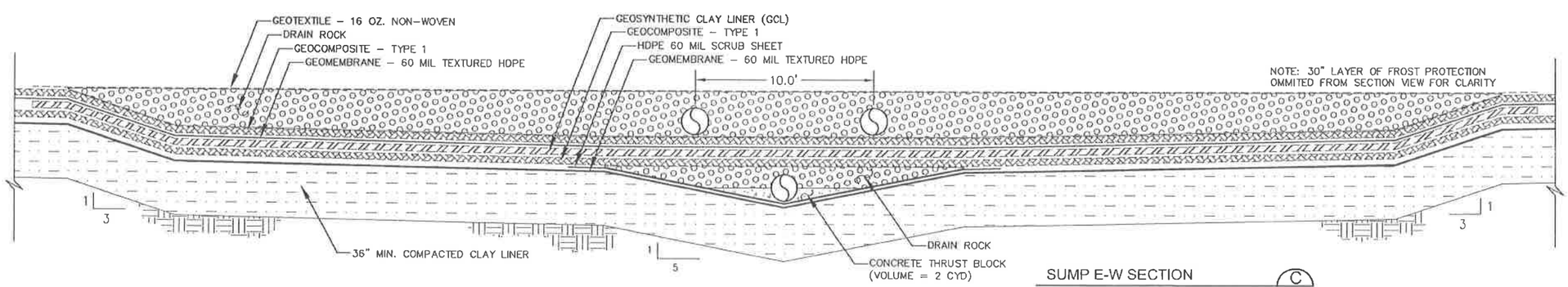

SUMP E-W SECTION (C)
N.T.S.

REV	DATE	BY	DESCRIPTION
0	2/8/12	WT	ISSUED FOR CONSTRUCTION

PROFESSIONAL ENGINEER REGISTERED 2/10/12 11632 STATE OF IDAHO VAUGHN THURGOOD

US Ecology Idaho
an American Ecology company

PREPARED BY
AMERICAN GEO TECHNICS
5260 Chinden Blvd · Boise, Idaho 83714
Phone (208) 658-8700 · Fax (208) 658-8703

DRAWN BY	CHECKED BY	PROJECT NUMBER
VJT	RWH	07B-G1654

PROJECT NAME
CELL 16 LANDFILL UNIT
GRANDVIEW, IDAHO

SUMPS AND RISERS
SECTIONS AND DETAILS

DRAWING NUMBER 16-11-06
REV B

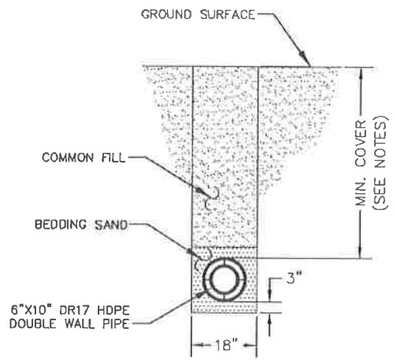

TYP. PIPE TRENCH SECTION (A)
N.T.S.

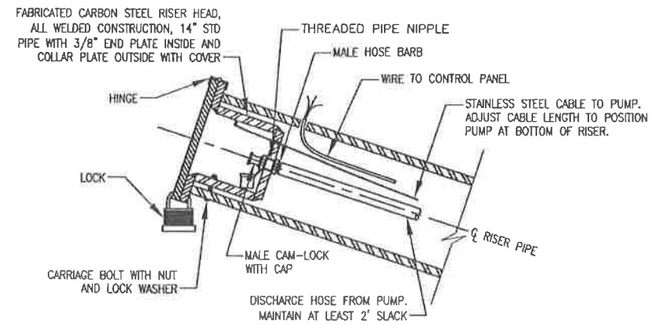

TYPICAL RISER PIPE HOOK-UP (5)
N.T.S.

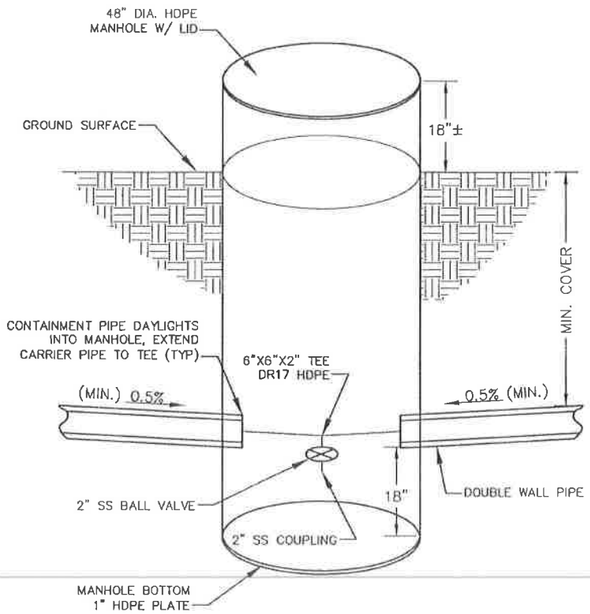

LEACHATE PIPE MANHOLE ACCESS (3/01)
N.T.S.

NOTES:

1. DOUBLE WALL LEACHATE PIPE TO MAINTAIN MINIMUM COVER OF 36 INCHES BENEATH ROADWAYS, 28 INCHES ELSEWHERE.
2. PROVIDE AS-BUILT SURVEY COORDINATES FOR BURIED LEACHATE PIPE AT ALL HINGE POINTS AND AT A MINIMUM SPACING OF 100 FEET ON CENTER.
3. DOUBLE WALL LEACHATE PIPE TO MAINTAIN POSIVITE DRAINAGE TOWARDS MANHOLE AT ALL TIMES.
4. MANHOLE PROVIDES SECONDARY CONTAINMENT, BASE AND SIDEWALL PENETRATIONS MUST BE SEALED.
5. ORIENT 4-INCH VALVE AND COUPLER INSIDE OF MANHOLE TO ALLOW FOR MAINTENANCE ACCESS AND PIPE DRAINAGE.
6. PROVIDE FLEX HOSE AND COUPLINGS FOR EACH RISER.
7. UPON INSTALLATION, THE 6-INCH CARRIER PIPE TO BE PRESSURE TESTED AT 80 PSI OVER A 24 HOUR PERIOD. THE 10-INCH CONTAINMENT PIPE TO BE PRESSURE TESTED AT 5 PSI OVER A 24 HOUR PERIOD.

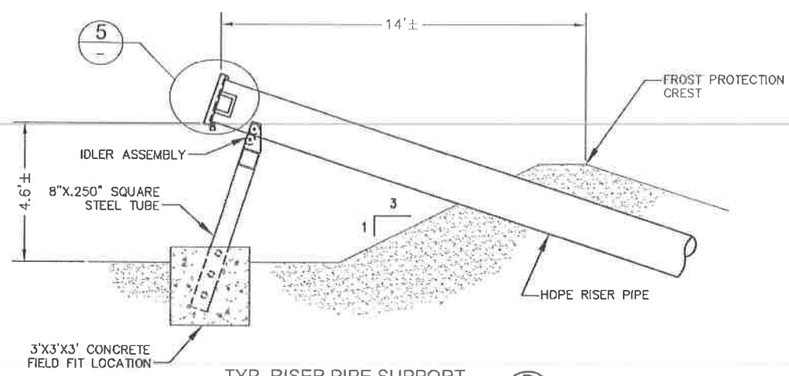

TYP. RISER PIPE SUPPORT (B)
N.T.S.

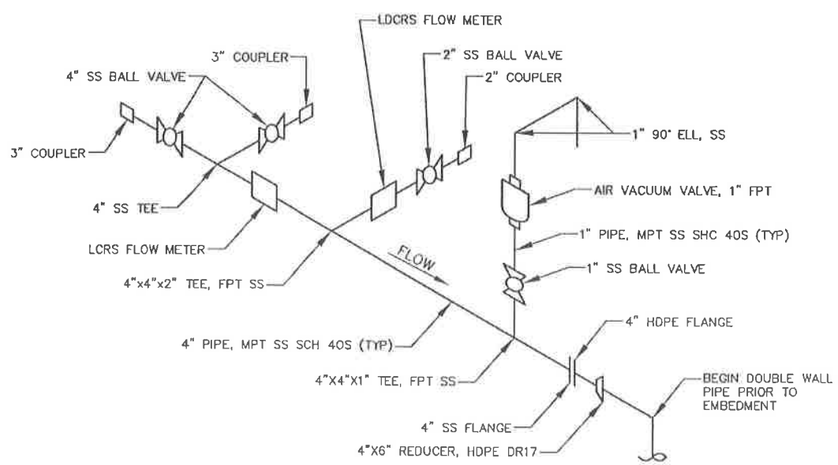

LEACHATE PIPE HARDWARE (4)
N.T.S.

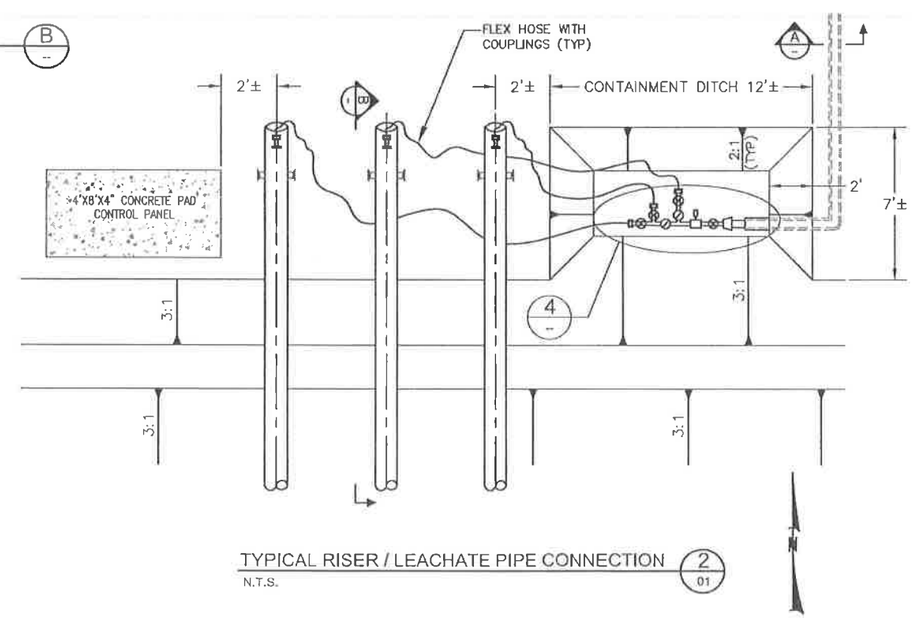

TYPICAL RISER / LEACHATE PIPE CONNECTION (2/01)
N.T.S.

REV	DATE	BY	DESCRIPTION
0	2/8/12	VJT	ISSUED FOR CONSTRUCTION

PROFESSIONAL ENGINEER REGISTERED 2/10/12 11632 STATE OF IDAHO VAUGHN THURGOOD

US Ecology Idaho
an American Ecology company

PREPARED BY
AMERICAN GEOTECHNICS
5260 Chinden Blvd · Boise, Idaho 83714
Phone (208) 658-8700 · Fax (208) 658-8703

DRAWN BY	CHECKED BY	PROJECT NUMBER
VJT	RWH	07B-G1654

PROJECT NAME
CELL 16 LANDFILL UNIT
GRANDVIEW, IDAHO

LEACHATE PIPE SECTIONS AND DETAILS

DRAWING NUMBER 16-11-07
REV B

CELL 16 DESIGN CAPACITY (Reduced for 30" Clean Frost Protection)	
LENGTH (ft)	ESTIMATED WASTE CAPACITY (cyd)
INITIAL PHASE 900 ft (assumed)	2,022,200
INTERIM PHASES per additional 100 ft	433,700
MAXIMUM PHASE 2800 ft (total)	10,262,500

NOTES:

1. WASTE PLACEMENT ALONG THE NORTH PERIMETER OF CELL 16 SHALL BE TEMPORARILY SET-BACK AT LEAST 27 FEET FROM THE LINER CREST, TO PROVIDE CONTAINMENT OF POTENTIAL STORM WATER RUN-OFF.
2. FINAL WASTE PLACEMENT ALONG THE NORTH SLOPE SHOULD OCCUR NEAR COMPLETION OF THE MAXIMUM PHASE, PRIOR TO CLOSURE.
3. INSTALL 18" DIAMETER CORRUGATED CULVERTS AT EACH DRAIN CHANNEL CROSSING DURING CONSTRUCTION OF TEMPORARY ACCESS ROADS.

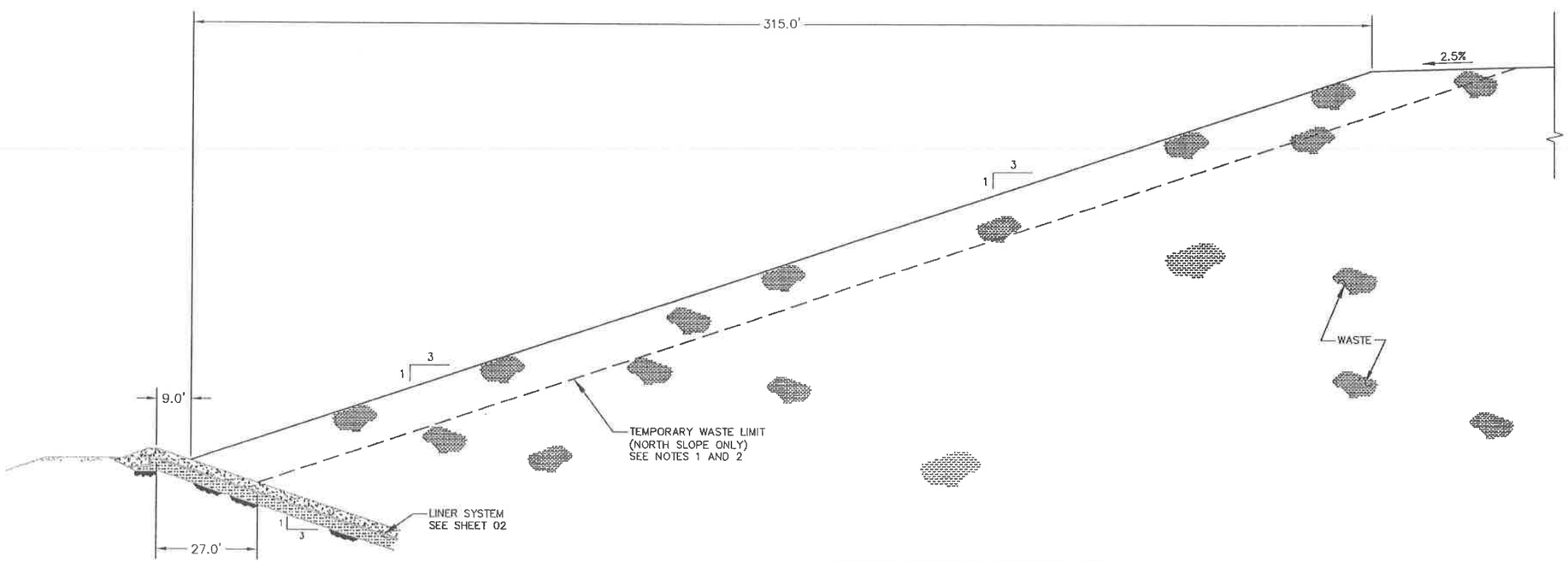

TYPICAL WASTE PLACEMENT (A / 04)
N.T.S.

REV	DATE	BY	DESCRIPTION
0	2/8/12	VJT	ISSUED FOR CONSTRUCTION

PROFESSIONAL ENGINEER REGISTERED 11632 STATE OF IDAHO VAUGHAN THURGOOD
2/10/12

US Ecology Idaho
an American Ecology company

PREPARED BY
AMERICAN GEO TECHNICS
5260 Chinden Blvd · Boise, Idaho 83714
Phone (208) 658-8700 · Fax (208) 658-8703

DRAWN BY	CHECKED BY	PROJECT NUMBER
VJT	RWH	07B-G1654

PROJECT NAME
CELL 16 LANDFILL UNIT
GRANDVIEW, IDAHO

WASTE PLACEMENT
SECTIONS AND DETAILS

DRAWING NUMBER 16-11-08
REV B

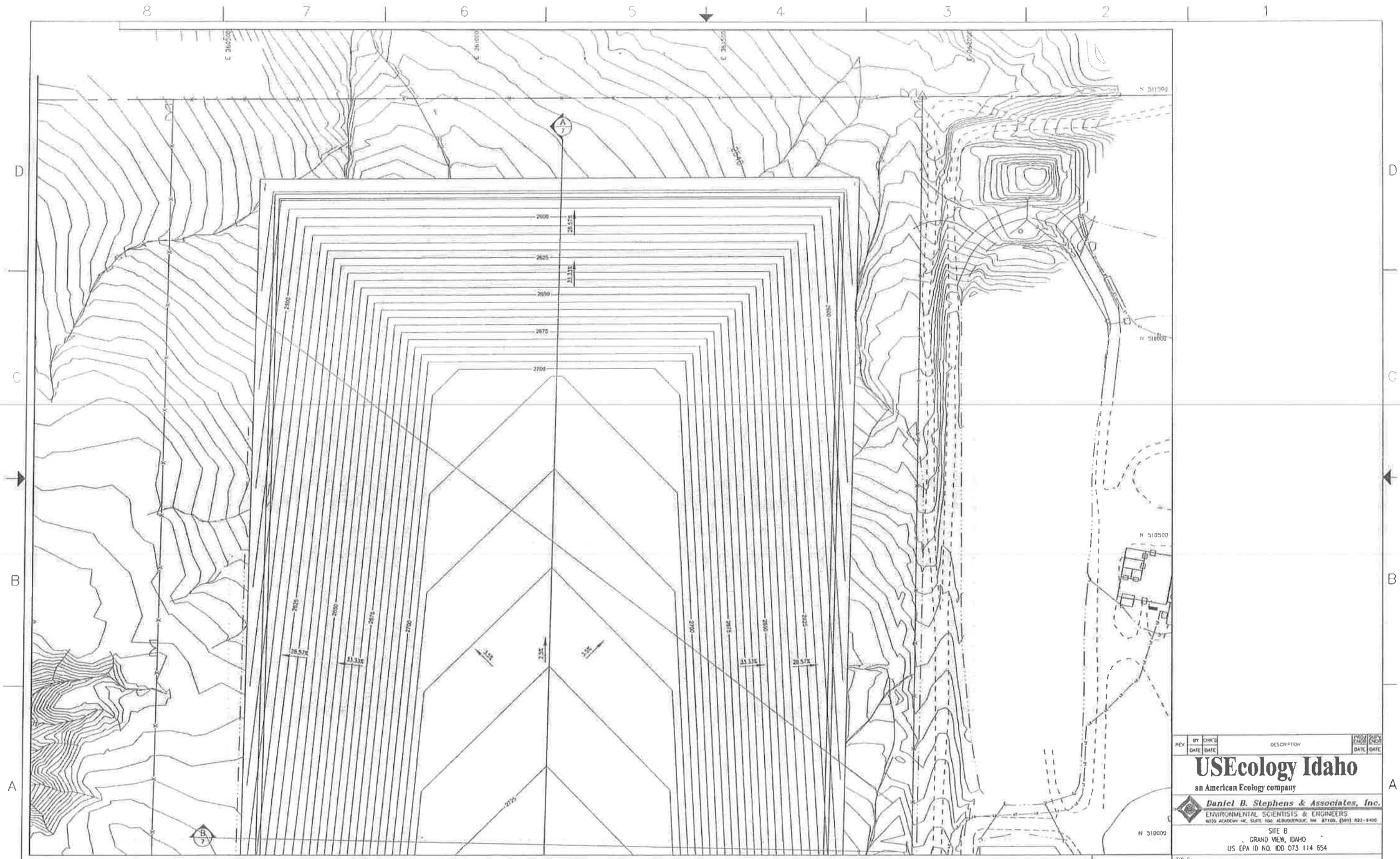

NOT FOR CONSTRUCTION

PROFESSIONAL ENGINEER REGISTERED 12739 STATE OF IDAHO ALERIC PEARL

REV	BY / DATE	CHK'D / DATE	DESCRIPTION	PROJ ENGR / DATE	SURV ENGR / DATE

USEcology Idaho

an American Ecology company

Daniel B. Stephens & Associates, Inc.

ENVIRONMENTAL SCIENTISTS & ENGINEERS

6020 ACADEMY NE, SUITE 100, ALBUQUERQUE, NM 87109, (505) 822-9400

SITE B

GRAND VIEW, IDAHO

US EPA ID NO. IDD 073 114 654

TITLE:

CIVIL

CELL 16 - FINAL CLOSURE

FINAL COVER GRADING PLAN - NORTH

DRAWN BY: KDB	DATE 8/19/11	SCALE: 1"=5'	FILE CODE: PRWE28A	REV. NO.
CHECKED: M. Miller	DATE 8/19/11	ENGINEER: D.E.Pease	DATE 8/19/11	DWG. NO. SHEET 5 of 9	
PROJ. MGR: J. Kelsey	DATE 8/19/11	APPROVED:	DATE	PROJ. NO. PRWI	3

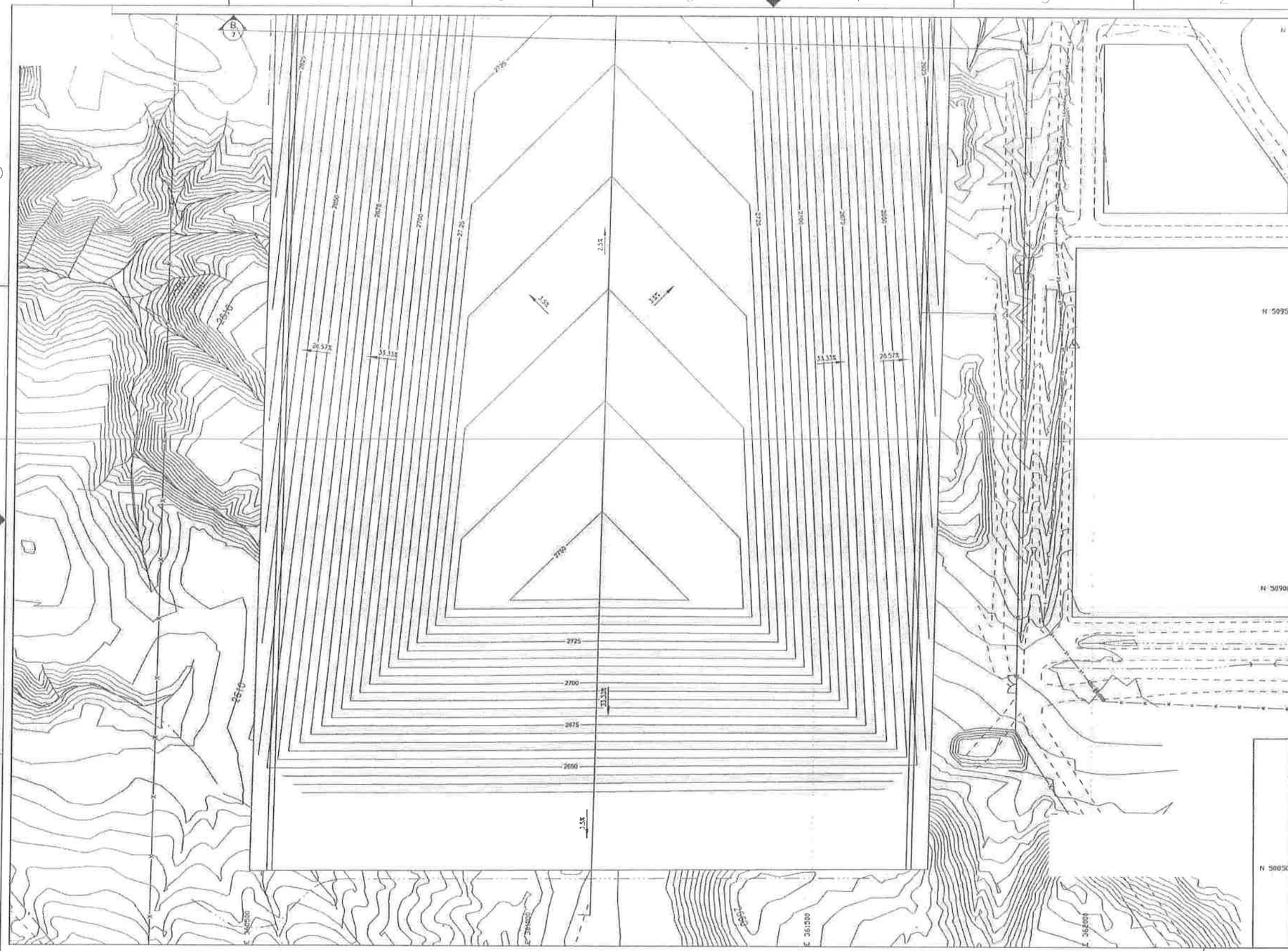

NORTH

0 80 FT

NOT FOR CONSTRUCTION

PROFESSIONAL ENGINEER REGISTERED 12739 STATE OF IDAHO ERIC FERCE

REV.	BY / DATE	CHK'D / DATE	DESCRIPTION	PROJ ENGR / DATE	SURV ENGR / DATE

USEcology Idaho

an American Ecology company

Daniel B. Stephens & Associates, Inc.
ENVIRONMENTAL SCIENTISTS & ENGINEERS
6020 ACADEMY NE, SUITE 100, ALBUQUERQUE, NM 87109, (505) 822-9400

SITE B
GRAND VIEW, IDAHO
US EPA ID NO. IDD 073 114 654

TITLE:
CIVIL
CELL 16 – FINAL CLOSURE
FINAL COVER GRADING PLAN – SOUTH

DRAWN BY: KDB	DATE 6/09/11	SCALE: N.T.S.	FILE CODE: PRWL26A	REV. NO.
CHECKED: M Miller	DATE 6/19/11	ENGINEER: B E Pierce	DATE 6/09/11	DWG. NO. SHEET 6 of 9	6
PROJ. MGR: J. Kelsey	DATE 6/09/11	APPROVED:	DATE	PROJ. NO. PRWI	

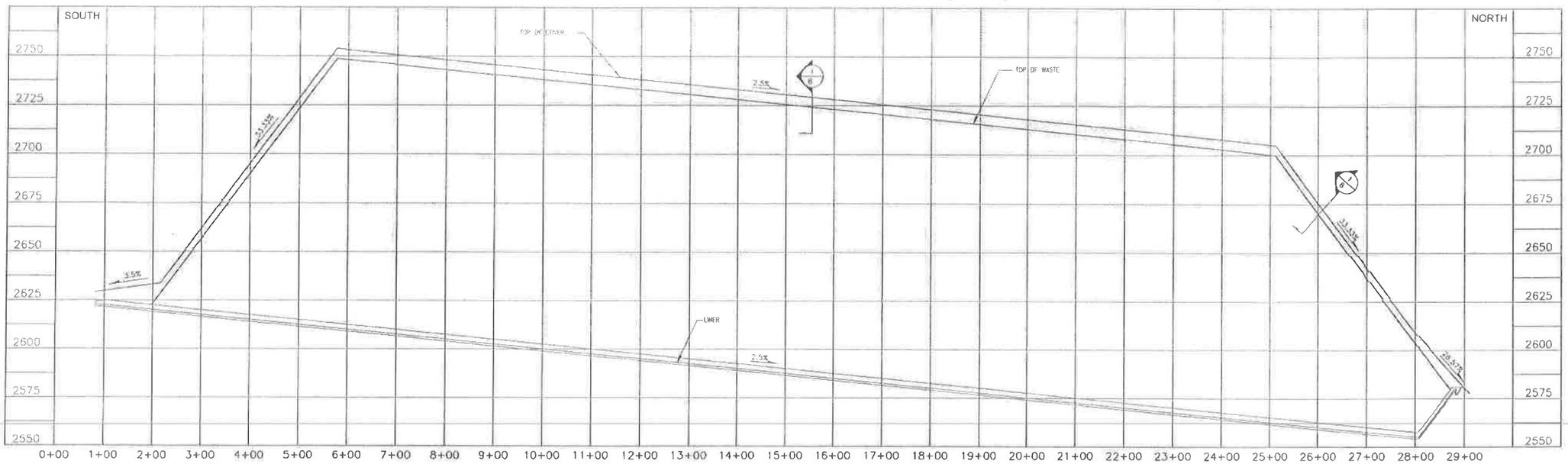

NOTE: VERTICAL EXAGGERATION x4

CROSS SECTION A 5,6

HORIZONTAL SCALE: 1"=100'
VERTICAL SCALE: 1"=25'

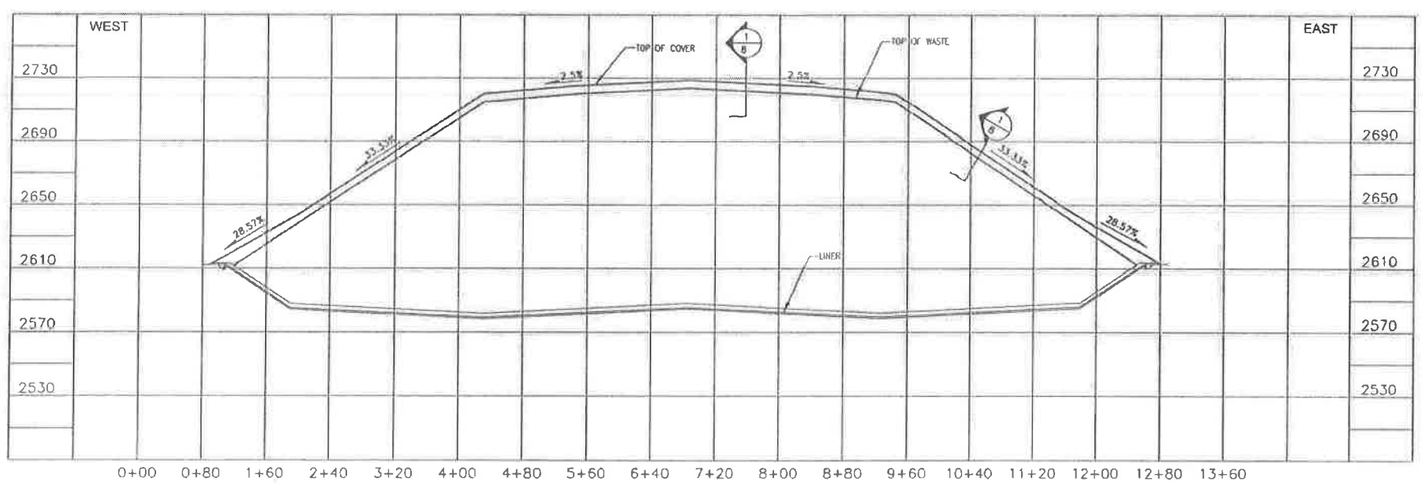

NOTE: VERTICAL EXAGGERATION x4

CROSS SECTION B 5,6

HORIZONTAL SCALE: 1"=100'
VERTICAL SCALE: 1"=25'

REV.	BY / DATE	CHK'D / DATE	DESCRIPTION	PROJ ENGR / DATE	SUPV ENGR / DATE

USEcology Idaho
an American Ecology company

Daniel B. Stephens & Associates, Inc.
ENVIRONMENTAL SCIENTISTS & ENGINEERS
6020 ACADEMY NE, SUITE 100, ALBUQUERQUE, NM 87109, (505) 822-9400

SITE B
GRAND VIEW, IDAHO
US EPA ID NO. IDD 073 114 654

TITLE:
CIVIL
CELL 16 – FINAL CLOSURE
TYPICAL CROSS SECTIONS

DRAWN BY / DATE	SCALE:	FILE CODE PRWE2B6	REV. NO.
KDD 8/19/11	N.T.S.	DWG NO SHEET 7 of 9	6
CHECKED / DATE: M. Miller 8/19/11	ENGINEER / DATE: R.E. Peace 8/19/11		
PROJ. MGR. / DATE: J. Kelley 8/19/11	APPROVED / DATE	PROJ NO PRWI	

PROFESSIONAL ENGINEER REGISTERED 12739 STATE OF IDAHO R. ERIC PEACE

NOT FOR CONSTRUCTION

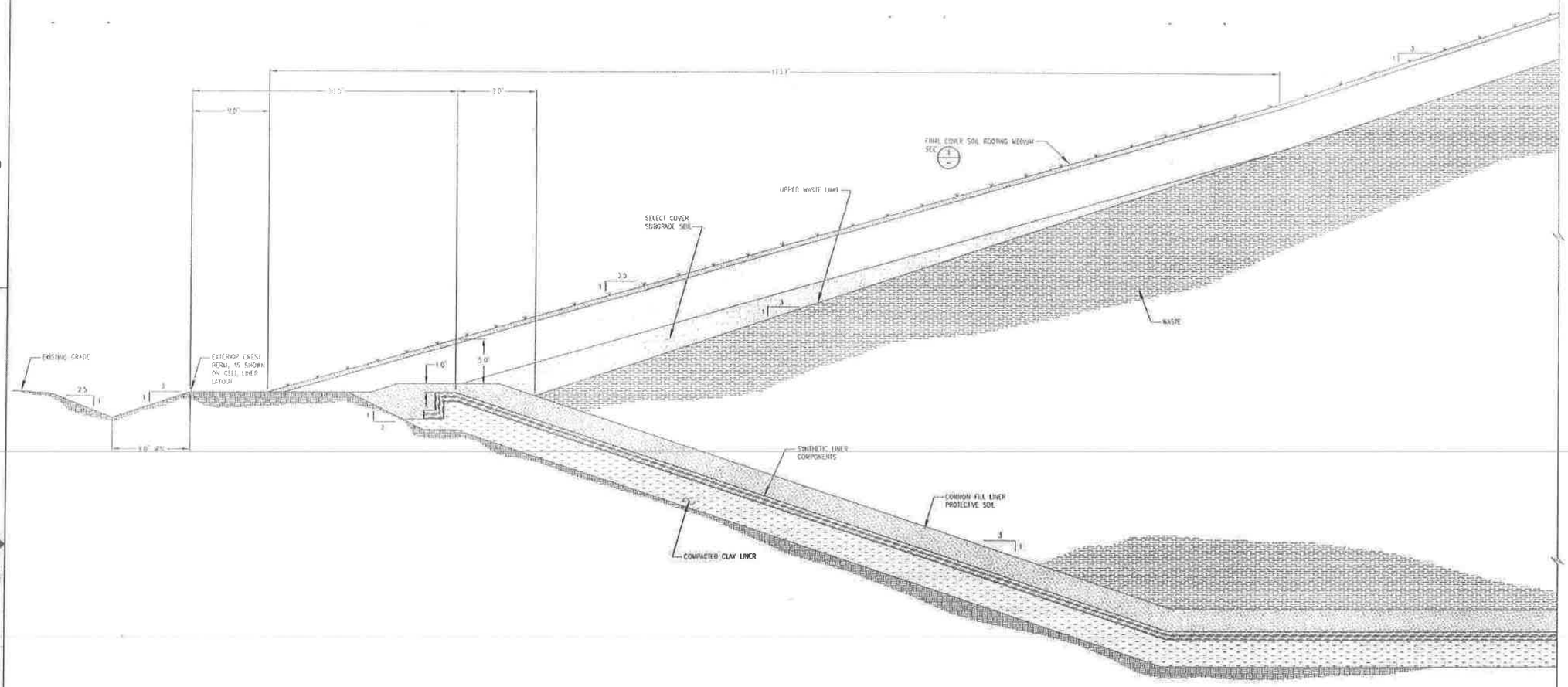

TYPICAL FINAL COVER SECTION (2)
N.T.S.

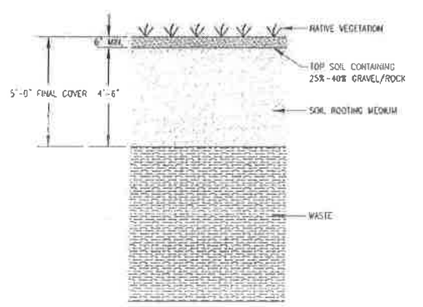

NOTE:

1. BONDED FIBER MATRIX OR EROSION CONTROL BLANKET APPLIED TO SURFACE FOR TEMPORARY (1-YEAR) STABILIZATION TO PROMOTE ESTABLISHING VEGETATION.

EVAPOTRANSPIRATION FINAL COVER SCHEMATIC (1)
N.T.S.

NOT FOR CONSTRUCTION

REV.	BY / DATE	CHK'D / DATE	DESCRIPTION	PROJ ENGR / DATE	SURV ENGR / DATE

USEcology Idaho
an American Ecology company

Daniel B. Stephens & Associates, Inc.
ENVIRONMENTAL SCIENTISTS & ENGINEERS
8820 ACADEMY NE, SUITE 100, ALBUQUERQUE, NM 87108, (505) 822-8400

SITE 8
GRAND VIEW, IDAHO
US EPA ID NO. IDD 073 114 654

TITLE:
CIVIL
CELL 16 - FINAL CLOSURE
TYPICAL FINAL COVER SECTIONS AND DETAILS - 1

DRAWN BY: DATE	SCALE:	FILE CODE: FINALIBA	REV. NO.
KDG 8/19/11	N.T.S.	DWG. NO. SHEET 8 of 9	3
CHECKED DATE	ENGINEER DATE		
M. Miller 8/19/11	R.E.Prose 8/19/11		
PROJ. MGR. DATE	APPROVED DATE	PROJ. NO. PRMI	
J. Kelly 8/19/11			

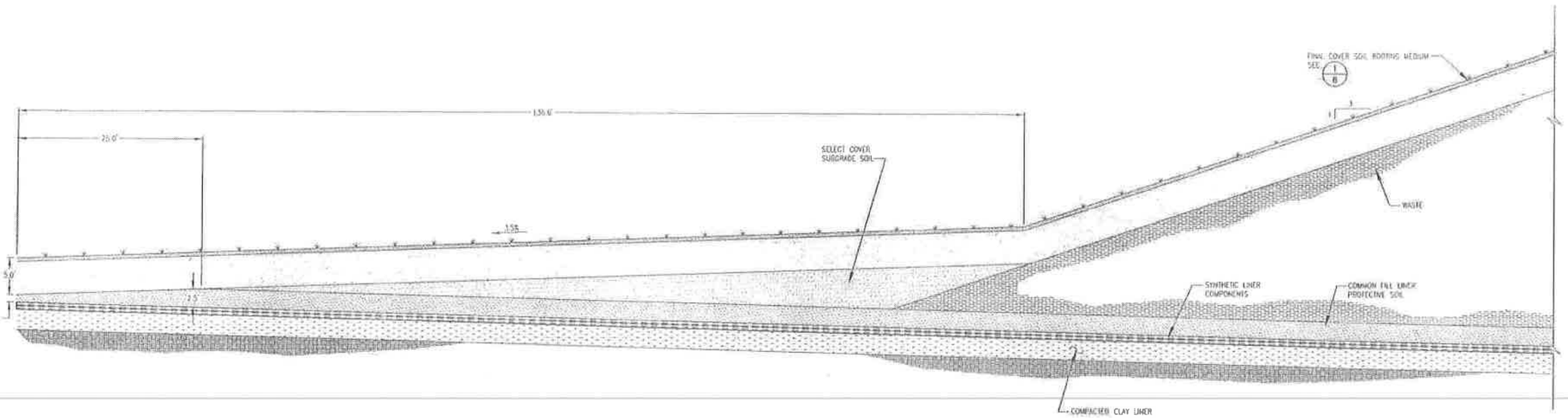

SOUTH SLOPE TYPICAL FINAL COVER SECTION (1 / -)
N.T.S.

NOT FOR CONSTRUCTION

REV.	BY DATE	CHK'D DATE	DESCRIPTION	PROJ ENGR DATE	SURV MGR DATE

USEcology Idaho
an American Ecology company

Daniel B. Stephens & Associates, Inc.
ENVIRONMENTAL SCIENTISTS & ENGINEERS
8020 ACADEMY NE, SUITE 100, ALBUQUERQUE, NM 87109, (505) 823-4400

SITE 9
GRAND VIEW, IDAHO
US EPA ID NO. IDD 073 114 654

TITLE:
CIVIL
CELL 16 – FINAL CLOSURE
TYPICAL FINAL COVER SECTIONS AND DETAILS – 2

DRAWN BY: DATE	SCALE:	FILE CODE P8H8.28A	REV. NO.
KDB 8/19/11	N.T.S.	DWG. NO. SHEET 9 of 9	3
CHECKED DATE	ENGINEER DATE		
M. Miller 8/19/11	R.E.Pease 8/19/11		
PROJ. MGR. DATE	APPROVED DATE	PROJ. NO. P7M1	
J. Kelsey 8/19/11			

PROFESSIONAL ENGINEER
RICHARD E. PEASE
12730
8/19/2011
ERIC PLAZA

DWG. NO. PRMI-L28
PROJ. NO. PRMI

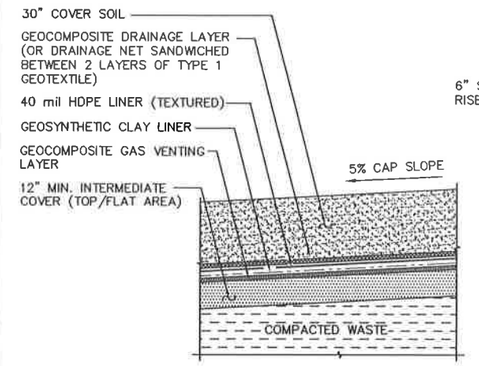

TYPICAL FINAL CLOSURE CAP SYSTEM DETAIL (TOP/FLAT AREA)

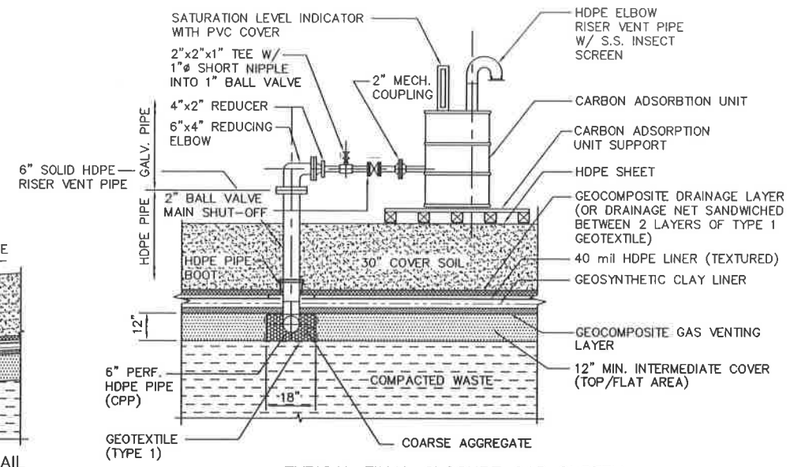

TYPICAL FINAL CLOSURE CAP SYSTEM GAS VENTING SYSTEM DETAIL

DETAIL 7 / L23
SCALE: N.T.S.

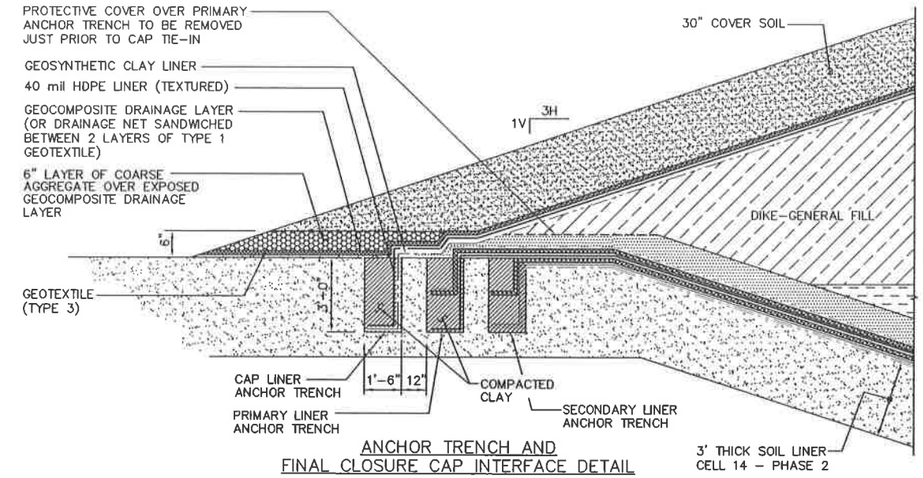

ANCHOR TRENCH AND FINAL CLOSURE CAP INTERFACE DETAIL

DETAIL 9
SCALE: N.T.S.

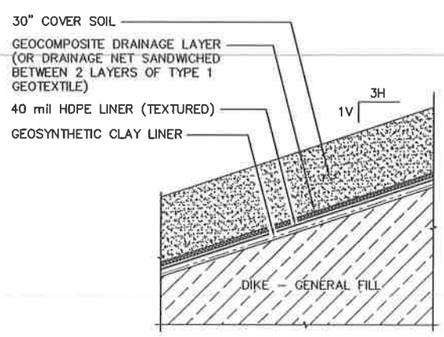

TYPICAL FINAL CLOSURE CAP SYSTEM DETAIL (3H:1V SIDE SLOPES)

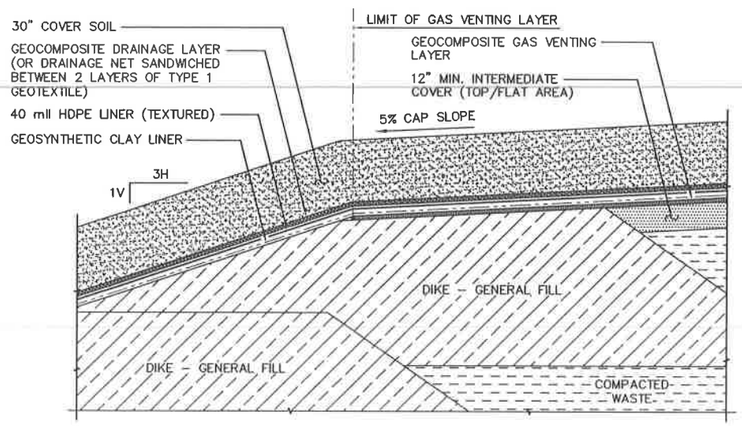

TYPICAL FINAL CLOSURE CAP SYSTEM (TOP/SIDESLOPE INTERFACE DETAIL)

DETAIL 8
SCALE: N.T.S.

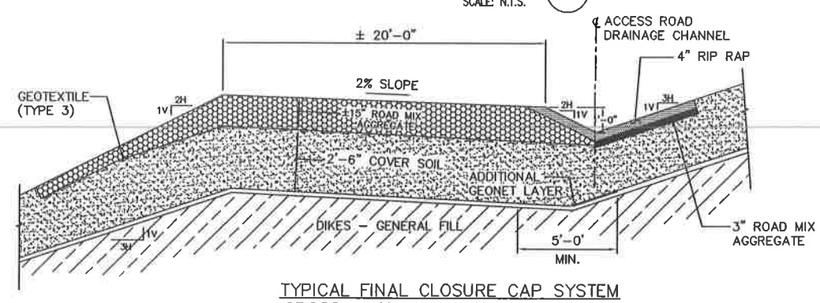

TYPICAL FINAL CLOSURE CAP SYSTEM CROSS - SECTION AT ACCESS ROAD

SECTION L-L / L23
SCALE: 3/8"=1'-0"

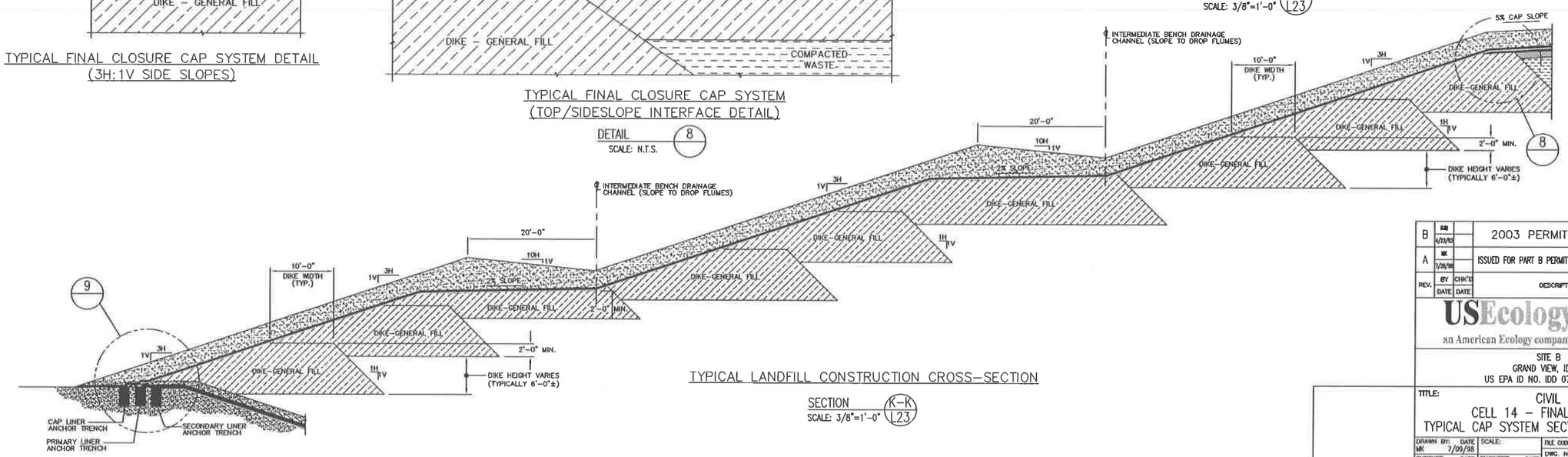

TYPICAL LANDFILL CONSTRUCTION CROSS-SECTION

SECTION K-K / L23
SCALE: 3/8"=1'-0"

REV.	BY / DATE	CHK'D / DATE	DESCRIPTION	ENGO ENGR / DATE	SURV ENGR / DATE
B	RM 4/23/03		2003 PERMIT RENEWAL		JK 4/23/03
A	MK 7/09/98		ISSUED FOR PART B PERMIT RENEWAL APPLICATION		

USEcology Idaho
an American Ecology company

SITE B
GRAND VIEW, IDAHO
US EPA ID NO. IDD 073 114 654

TITLE: CIVIL
CELL 14 - FINAL CLOSURE
TYPICAL CAP SYSTEM SECTIONS AND DETAILS

DRAWN BY: MK DATE 7/09/98	SCALE:	FILE CODE PRMIL28B	REV. NO.
CHECKED DATE	ENGINEER DATE	DWG. NO. PRMI-L28	B
PROJ. MGR. DATE	APPROVED DATE	PROJ. NO. PRMI	

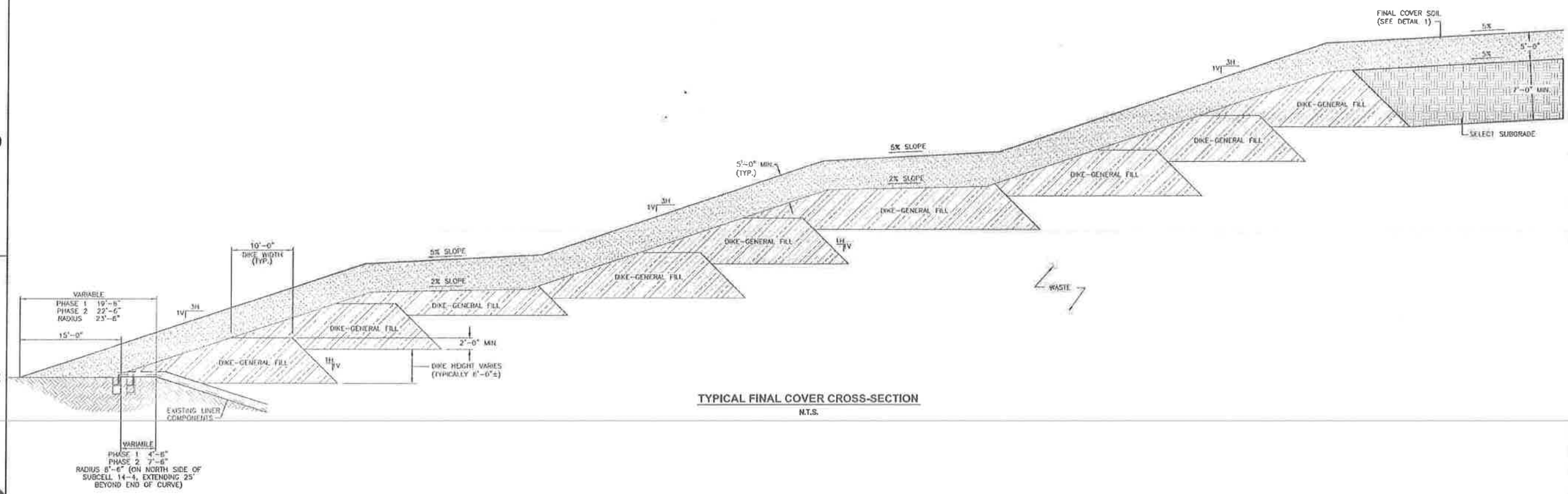

TYPICAL FINAL COVER CROSS-SECTION
N.T.S.

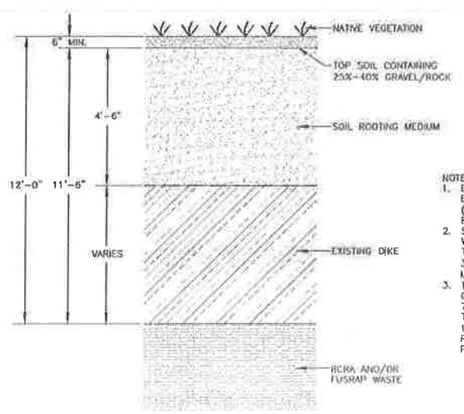

SIDE SLOPE

NOTES:
1. BONDED FIBER MATRIX OR EROSION CONTROL BLANKET APPLIED TO SURFACE FOR TEMPORARY (1-YEAR) STABILIZATION TO PROMOTE ESTABLISHING VEGETATION.
2. SIDE SLOPE: EXISTING DIKES AND NON-FUSRAP WASTE ARE PLACED WITH MINIMUM 8.31-FOOT THICKNESS. MINIMUM SOIL COVER THICKNESS OF 3.5 FEET NEEDED TO MEET 11.81-FOOT (3.6 METER) RADON BARRIER REQUIREMENT.
3. TOP DECK: SELECT RCRA NON-FUSRAP WASTE OR SOIL TO BE PLACED WITH MINIMUM 7.0-FOOT THICKNESS. MINIMUM SOIL COVER THICKNESS OF 5.0 FEET NEEDED TO MEET 11.81-FOOT (3.6 METER) RADON BARRIER REQUIREMENT AND EVAPOTRANSPIRATION COVER PERFORMANCE.

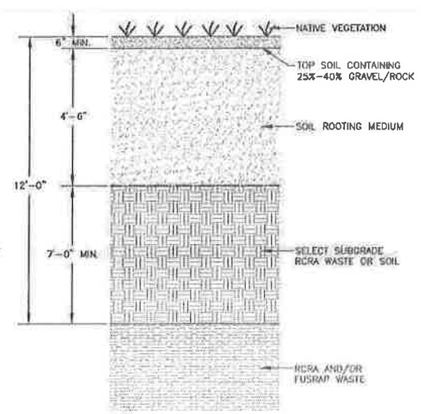

TOP DECK

CELL 14 EVAPOTRANSPIRATION FINAL COVER SCHEMATIC (1 / 6,7)
N.T.S.

NOT FOR CONSTRUCTION

REV.	BY / DATE	CHK'D / DATE	DESCRIPTION	PROJ. ENGR. / DATE	PROJ. MGR. / DATE

USEcology Idaho
an American Ecology company

Daniel B. Stephens & Associates, Inc.
ENVIRONMENTAL SCIENTISTS & ENGINEERS
6020 ACADEMY NE, SUITE 100, ALBUQUERQUE, NM 87109, (505) 822-9400

SITE B
GRAND VIEW, IDAHO
US EPA ID NO. IDD 073 114 654

TITLE:
CIVIL
CELL 14 – FINAL CLOSURE
TYPICAL FINAL COVER SECTION AND DETAILS

DRAWN BY: DGB	DATE: 10/25/10	SCALE: AS NOTED	FILE CODE: ES07_0130_079	REV. NO.
CHECKED: M. Miller	DATE: 10/25/10	ENGINEER: R.E.J. Pease	DATE: 10/25/10	DWG. NO. SHEET 8 of 9
PROJ. MGR.: J. Kelsey	DATE: 10/25/10	APPROVED	DATE	PROJ. NO. ES07.0130

3

PROFESSIONAL ENGINEER REGISTERED 12139 STATE OF IDAHO R. ERIC PEASE
Robert Eric Pease 10/25/2010

DWG. NO. PRMI-L29
PROJ. NO. PRMI

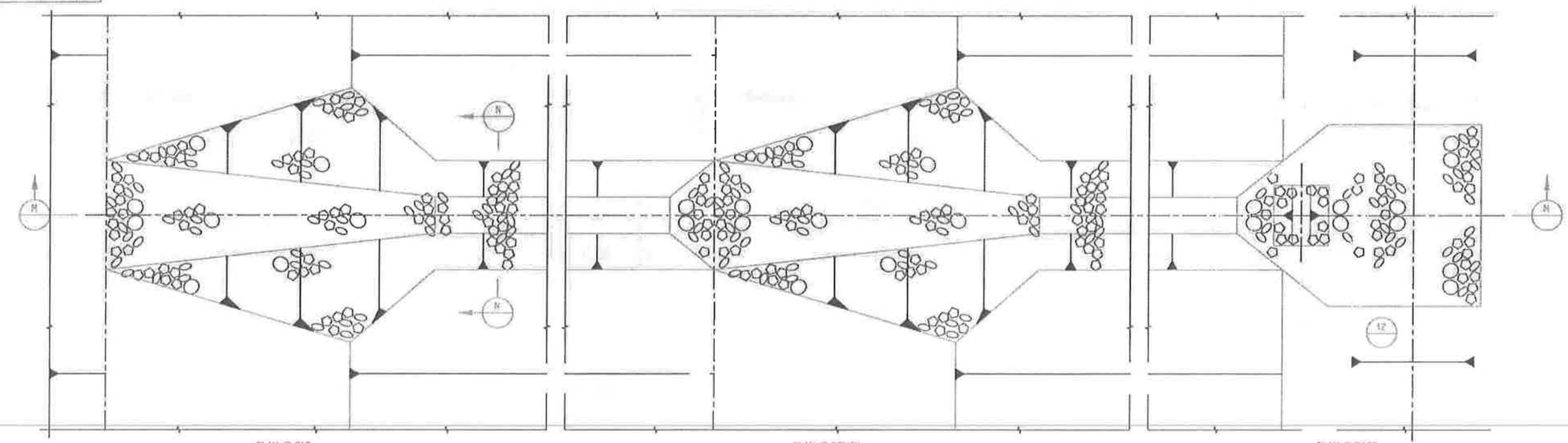

PLAN-RIP RAP LINED DROP FLUME
DETAIL 10 / L23
SCALE: 1/4"=1'-0"

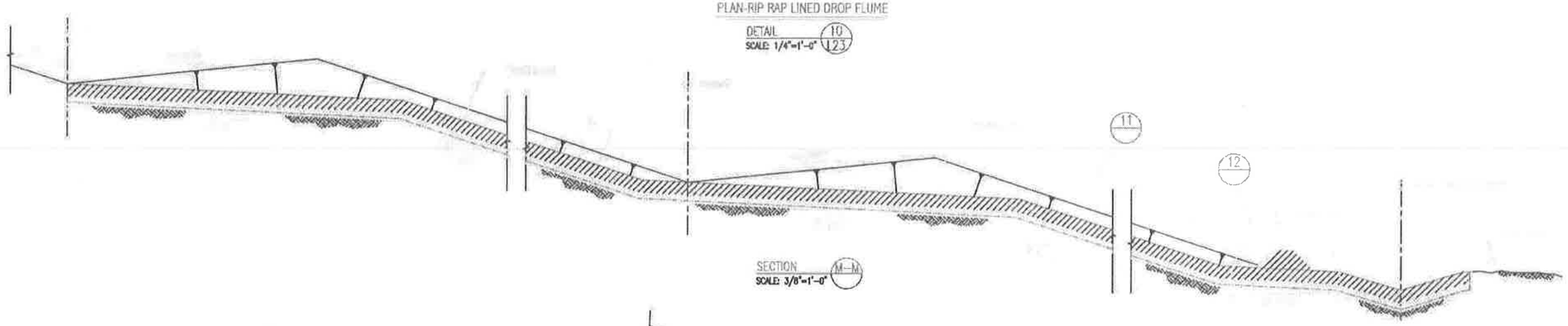

SECTION M-M
SCALE: 3/8"=1'-0"

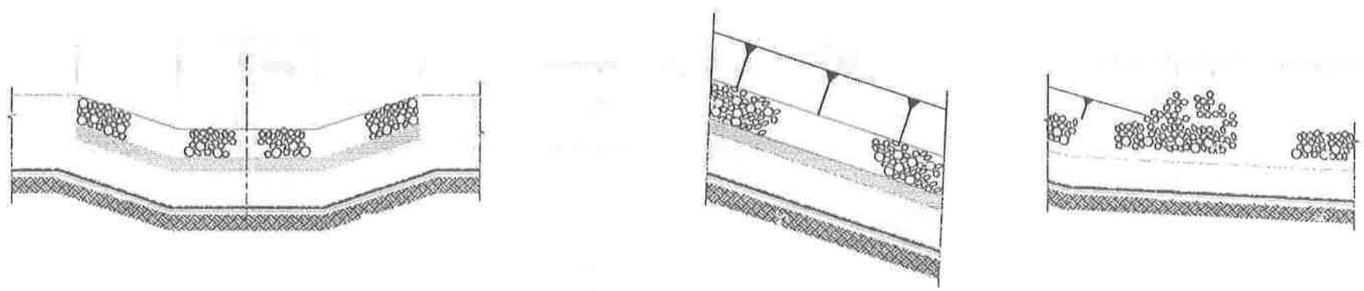

SECTION N-N
SCALE: 3/8"=1'-0"

DETAIL 11
SCALE: 1/4"=1'-0"

DETAIL 12
SCALE: 1/4"=1'-0"

REV.	BY / DATE	CHK'D / DATE	DESCRIPTION	ENGR. / DATE	SUPV. / DATE
A	MI 7/24/98		ISSUED FOR PART B PERMIT RENEWAL APPLICATION		

USEcology Idaho
an American Ecology company

SITE B
GRAND VIEW, IDAHO
US EPA ID NO. IDD 073 114 654

TITLE:
CIVIL
CELL 14 – FINAL CLOSURE
TYPICAL CAP DRAINAGE SECTIONS AND DETAILS

DRN. BY: MI DATE: 7/24/98	SCALE:	FILE CODE: PRMIL29A	REV. NO.
CHECKED DATE	ENGINEER DATE	DWG. NO. PRMI-L29	A
PROJ. MGR. DATE	APPROVED DATE	PROJ. NO. PRMI	

DWG. NO. PRMI-R15
PROJ. NO. PRMI

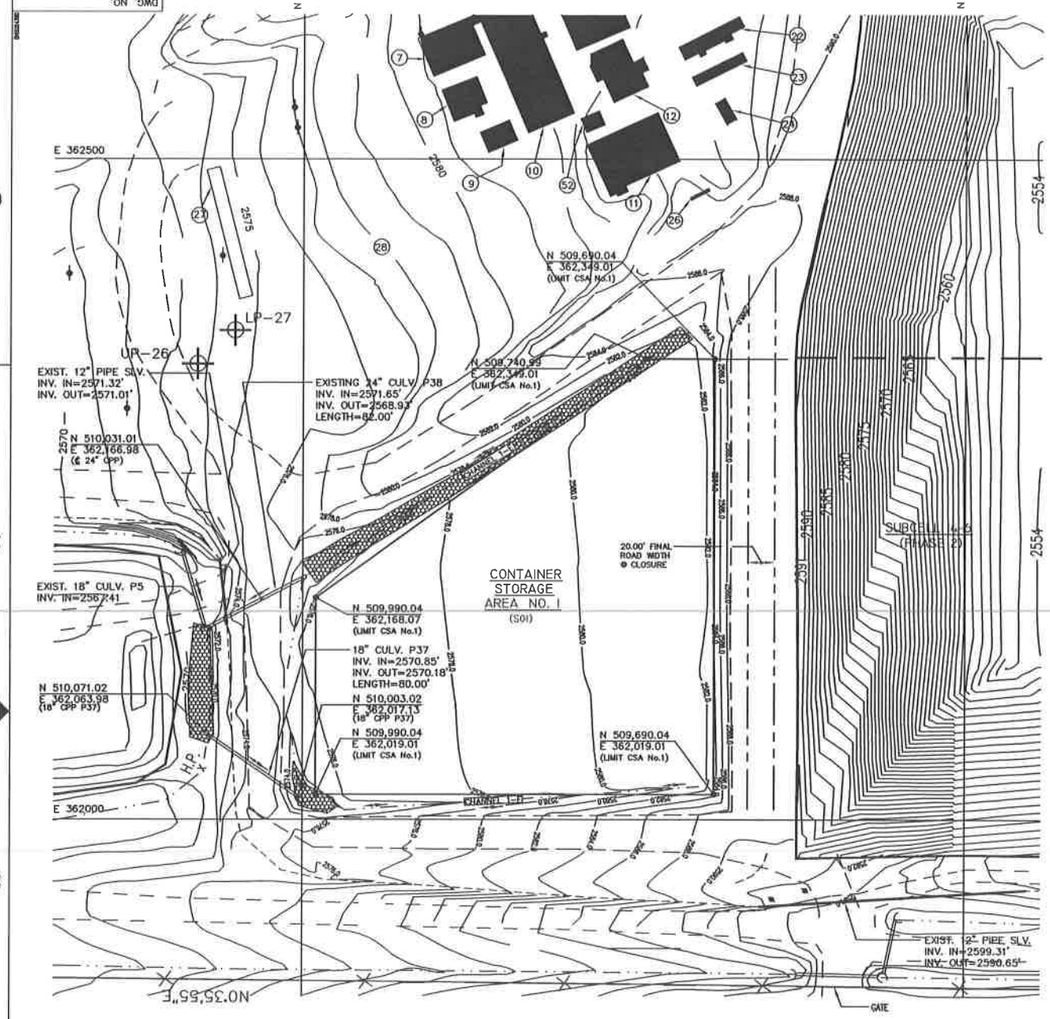

CONTAINER STORAGE AREA No. 1 – GRADING PLAN
SCALE: 1" = 50'

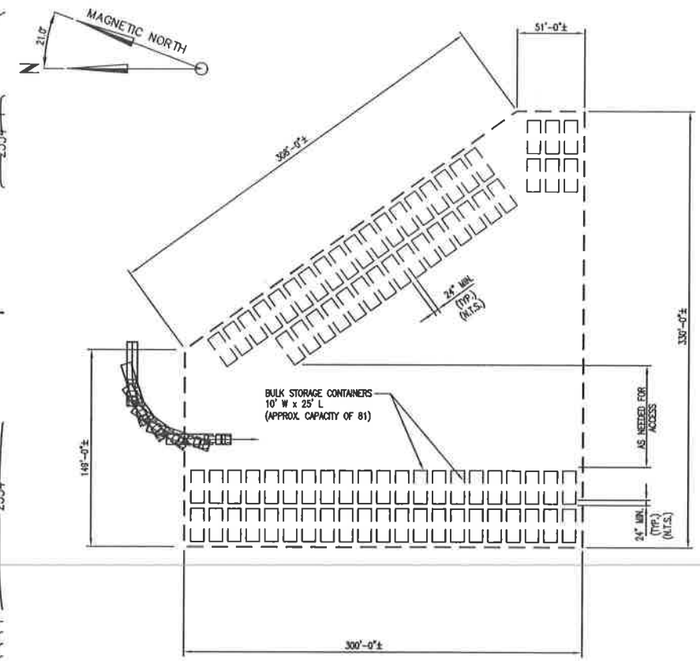

DETAIL "1"
TYPICAL BULK STORAGE CONTAINER AREA No. 1 LAYOUT
SCALE: 1"=50'

NOTES:

1. CONTAINER STORAGE AREA No. 1 SHALL BE USED FOR THE STORAGE AND STAGING OF BULK CONTAINERS AS TYPICALLY DEPICTED IN DETAIL "1". BULK CONTAINERS SHALL BE STORED WITH A MINIMUM DISTANCE OF 30 INCHES BETWEEN EVERY CONTAINER AND EVERY TWO ROWS OF CONTAINERS SHALL HAVE A 4 FOOT WIDE AISLE TO ALLOW EMERGENCY EQUIPMENT ACCESS.
2. DETAIL "1" IS PRESENTED FOR GENERAL ARRANGEMENT ONLY.

GENERAL NOTES:

1. EXISTING SITE TOPOGRAPHY, PHYSICAL FEATURES AND DELINEATIONS OBTAINED FROM AERIAL PHOTOGRAPHY AND SURVEYED DATUM PROVIDED TO ENVIROSOURCE TECHNOLOGIES BY: J.J. HOWARD ENGINEERING–SURVEYING; 1675–A HILL ROAD; BOISE, IDAHO 83702. DATE OF ORIGINAL SURVEY – NOVEMBER 4, 1985.
2. ADDITIONALLY THE FOLLOWING AREAS OF THE SITE HAVE BEEN UPDATED AND INCORPORATED INTO THE EXISTING SITE PLAN AS FOLLOWS:
   - A. AN ADDITIONAL 1,000 FEET TO THE NORTH OF SECTION 19 HAS BEEN SURVEYED AND INCORPORATED INTO THE EXISTING TOPOGRAPHY. SURVEY BY: J.J. HOWARD DATED FEBRUARY 20, 1998.
   - B. STABILIZATION AND CONTAINMENT BUILDING UPDATED AS OF JANUARY 14, 1997. SURVEY BY: J.J. HOWARD. DESIGN CONTOURS BY: ENVIROSOURCE TECHNOLOGIES.
   - C. PAD 4 PROCESS PLANT AREA UPDATED AS OF APRIL 15, 1998. SURVEY BY: J.J. HOWARD.
   - D. LEACHATE FORCE MAIN AND SOIL STOCKPILE SURVEY UPDATED AS OF FEBRUARY 15, 1999. SURVEY BY: J.J. HOWARD.
   - E. THE CURRENT TOP OF WASTE ELEVATIONS FOR CELL 5 AS OF JANUARY 2, 1996. SURVEY BY: J.J. HOWARD.
   - F. THE CURRENT TOP OF WASTE ELEVATIONS FOR CELL 14 AS OF JANUARY 04, 2001. SURVEY BY: J.J. HOWARD.
   - G. TOPOGRAPHY OF TRENCHES 10 AND 11 UPDATED AS OF SEPTEMBER 12, 2000. SURVEY BY: J.J. HOWARD.
   - H. UPDATE OF CONTAINER STORAGE AREA NO. 1 TOPOGRAPHY AS OF JUNE 18, 1998. SURVEY BY: J.J. HOWARD.
   - I. BORROW AREA TOPOGRAPHY UPDATED AS OF DECEMBER 12, 2000. SURVEY BY: J.J. HOWARD.
   - J. WEST HAUL ROAD TOPOGRAPHY UPDATED AS OF DECEMBER 05, 2000. SURVEY BY: J.J. HOWARD.
   - K. ET CAP TEST PAD TOPOGRAPHY UPDATED AS OF NOVEMBER 08, 2000. SURVEY BY: J.J. HOWARD.

FACILITY KEY

7 FIRE HOUSE
8 SAFETY BUILDING
9 STORAGE BUILDING
10 MAINTENANCE SHOP/FIELD TECH BUILDING
11 DECONTAMINATION BUILDING
12 LAB OFFICES
13 RECEIVING OFFICE/LAB/FINANCE
22 STORAGE BUILDING
23 ADMINISTRATION OFFICE NO.5/HYDOGEOLOGY
24 IDAHO D.E.Q. TRAILER
27 SAMPLING PLATFORM
28 STAGING AREA
52 OFFICE TRAILER SANITARY TANK

LEGEND

(26)	EXISTING FACILITY KEY NUMBER
	EXISTING POWER POLE
× 2544.70	SPOT ELEVATION
U-14	EXISTING WELL
—×——×—	EXISTING FENCE LINE
	PROPERTY BOUNDARY
	EXISTING UNIMPROVED ROAD
2550	EXISTING CONTOUR
	RCRA UNIT BOUNDARY
	EXISTING CULVERT
	EXISTING DRAINAGE CHANNEL
	PROPOSED DRAINAGE CHANNEL
	PROPOSED CULVERT
2570	PROPOSED CONTOUR
	PROPOSED GRAVEL ROAD
	LIMITS OF PROPOSED BULK STORAGE CONTAINER AREA 1
	NEW LEACHATE SYSTEM PIPING
	NEW CONTAINMENT PIPE
	NEW LEACHATE SYSTEM PIPE SUPPORT

REV.	BY / DATE	CHK'D / DATE	DESCRIPTION	PROJ. ENGR / DATE	SUPV. ENGR / DATE
D	RAN / 4/22/03	- / -	2003 PERMIT RENEWAL	- / -	AH / 4/22/03
C	MK / 4/2/01	- / -	ISSUED IN RESPONSE TO NOD LETTER DATED JUNE 30, 1999	- / -	MBS / 4/2/01
B	MK / 1/15/99	- / -	ISSUED FOR JANUARY 1999 CLASS 3 PERMIT MODIFICATION	- / -	- / -
A	MK / 7/28/98	- / -	ISSUED FOR PART B PERMIT RENEWAL APPLICATION	- / -	- / -

USEcology Idaho
an American Ecology company

SITE B
GRAND VIEW, IDAHO
US EPA ID NO. IDD 073 114 654

TITLE:
GENERAL FACILITY
CONTAINER STORAGE AREA 1
TYPICAL CONTAINER LAYOUT & REGRADING PLAN

DRN. BY: MK	DATE 5/18/98	SCALE:	FILE CODE PRMIR150
CHECKED	DATE	ENGINEER DATE	DWG. NO. PRMI-R15
PROJ. MGR.	DATE	APPROVED DATE	PROJ. NO. PRMI

REV. NO. D

DWG. NO. PRMI-R21
PROJ. NO. PRMI

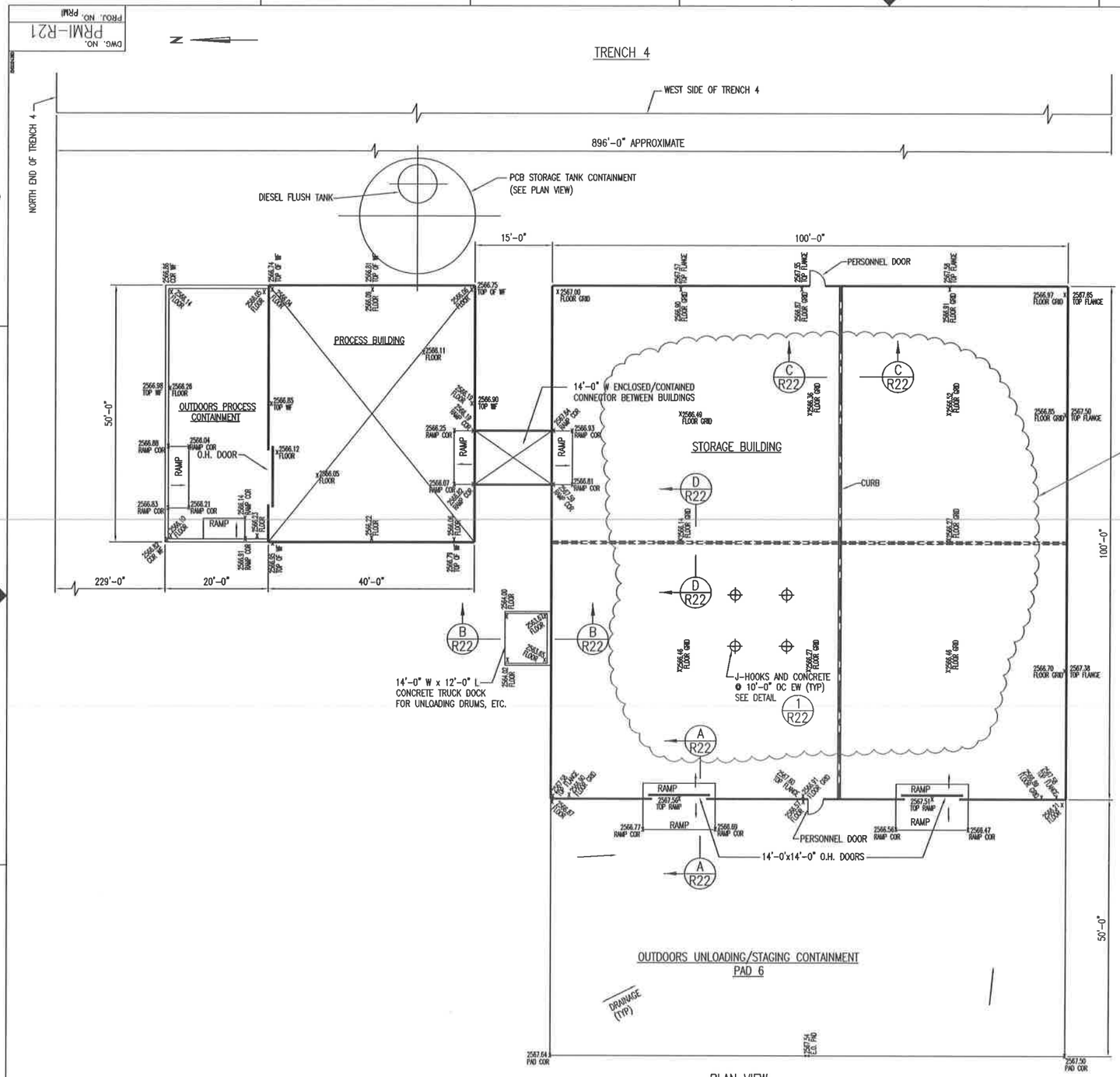

PLAN VIEW
RCRA/PCB STORAGE BUILDING AND PCB PROCESSING BUILDING
SCALE: NTS

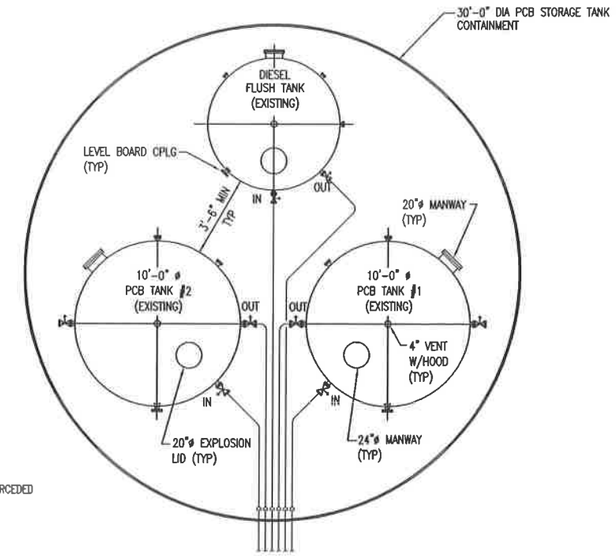

PLAN VIEW
PCB STORAGE TANK CONTAINMENT LAYOUT
SCALE: NTS

NOTES:

1. THE FLOOR THE PROCESS BUILDING IS CONSTRUCTED OF 1/4" CARBON STEEL PLATE, CONTINUOUS LAP (3" MIN) WELDED WITH AN 8" HIGH CONTAINMENT WALL TYPICAL.
2. OUTDOORS CONTAINMENT AT THE PROCESS BUILDING IS ALSO 1/4" CARBON STEEL PLATE WITH AN 8" HIGH CONTAINMENT WALL.
3. OUTDOORS UNLOADING/STAGING CONTAINMENT AT THE STORAGE BUILDING IS REINFORCED CONCRETE WITH 8" HIGH (NOMINAL) CURB WALL ON THREE (3) SIDES. SLAB IS SLOPED TO DRAIN TO SOUTHEAST FOR COLLECTION.
4. THE TRUCK DOCK IS REINFORCED CONCRETE WITH DRAINAGE TO A CENTRAL SUMP.
5. STEEL CONTAINMENT FLOOR WAS REMOVED FROM STORAGE BUILDING AND HAS BEEN REPLACED WITH CONCRETE CONTAINMENT SLABS, AS SHOWN ON DRAWINGS PRMI-C16 AND PRMI-C17.

REV.	BY / DATE	CHK'D / DATE	DESCRIPTION	PROJ ENGR / DATE	SUPV ENGR / DATE
C	VR / 8/22/13	— / —	UPDATED FLOOR REMOVAL / PAD 7 REF.	— / —	— / —
B	BM / 4/14/03	- / -	2003 PERMIT RENEWAL	- / -	JH / 4/14/03
A	BM / 7/24/97	- / -	ISSUED FOR B PERMIT RENEWAL APPLICATION	- / -	- / -

USEcology Idaho
an American Ecology company

SITE B
GRAND VIEW, IDAHO
US EPA ID NO. IDD 073 114 654

TITLE: GENERAL ARRANGEMENT – RCRA/PCB STORAGE BLDG & PCB PROCESSING BLDG, AND PCB STORAGE TANK FACILITY – PLANS

DRAWN BY: JZ	DATE 12/29/97	SCALE:		FILE CODE PRMR21D	REV. NO.
CHECKED	DATE	ENGINEER	DATE	DWG. NO. PRMI-R21	C
PROJ. MGR.	DATE	APPROVED	DATE	PROJ. NO. PRMI	

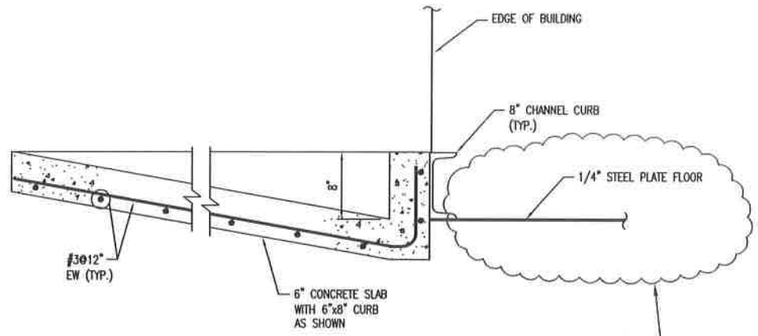

SECTION THRU CONCRETE PAD @ STORAGE BUILDING INTERFACE

SECTION A / R21
SCALE: NTS

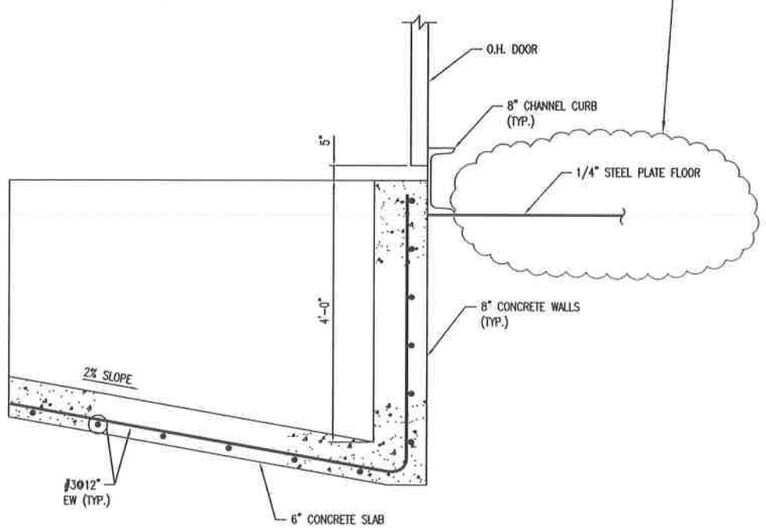

SECTION THRU CONCRETE TRUCK DOCK @ STORAGE BUILDING INTERFACE

SECTION B / R21
SCALE: NTS

STEEL FLOOR SUPERCEDED SEE NOTE 1

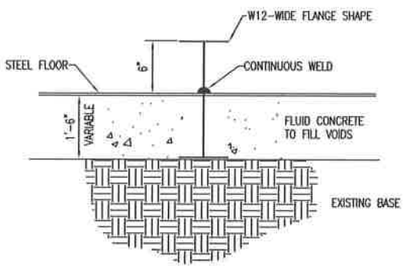

SECTION C / R21
SCALE: NTS

NOTE:

6" WILL BE MINIMUM HEIGHT OF CURB "ON TOP" BUT MAY BE MORE DUE TO STEEL CONTOUR.

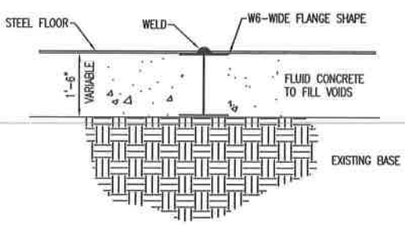

SECTION D / R21
SCALE: NTS

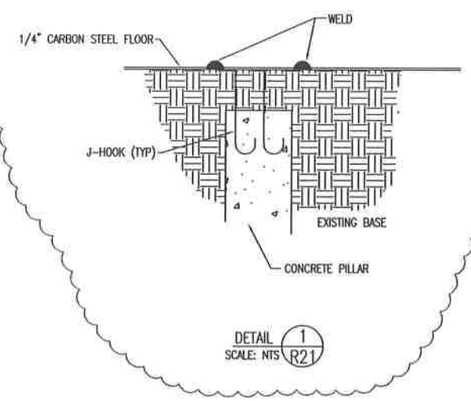

DETAIL 1 / R21
SCALE: NTS

NOTES:

1. STEEL CONTAINMENT FLOOR WAS REMOVED FROM STORAGE BUILDING AND HAS BEEN REPLACED WITH CONCRETE CONTAINMENT SLABS AND CURBS, AS SHOWN ON DRAWINGS PRMI-C16 AND PRMI-C17
2. CONTAINMENT CAPACITY OF 100'-0"x50'-0" CONCRETE UNLOADING/STAGING PAD ON WEST SIDE OF STORAGE BULDING IS APPROXIMATE 12,500 GAL

REV.	BY / DATE	CHK'D / DATE	DESCRIPTION	PROJ ENGR / DATE	SUPV ENGR / DATE
C	MT / 6/22/12	— / —	UPDATED FLOOR REMOVAL / PAD 7 REF.	— / —	— / —
B	RAN / 4/22/03	- / -	2003 PERMIT RENEWAL	- / -	JM / 4/22/03
A	DBH / 1/28/98	- / -	ISSUED FOR B PERMIT RENEWAL APPLICATION	- / -	- / -

USEcology Idaho
an American Ecology company

SITE B
GRAND VIEW, IDAHO
US EPA ID NO. IDD 073 114 654

TITLE: GENERAL ARRANGEMENT – RCRA/PCB STORAGE BLDG & PCB PROCESSING BLDG, AND PCB STORAGE TANK FACILITY – SECTIONS

DRAWN BY: JZ	DATE 12/30/97	SCALE:	FILE CODE PRMR22B	REV. NO.
CHECKED	DATE	ENGINEER DATE	DWG. NO. PRMI-R22	C
PROJ. MGR.	DATE	APPROVED DATE	PROJ. NO. PRMI	

DWG. NO. PRMI-R22
PROJ. NO. PRMI

Drawing Number	Drawing Title	May 2014 USEI Permit Application Section Reference
Leachate Piping and Treatment System		
720C-G01	Piping Leachate Treatment System Cell 14 Leachate Plans	D, I
720C-G02	Piping Leachate Treatment System Detail Plan No. 1	D, I
720C-G03	Piping Leachate Treatment System Deatil Plan No. 2	D, I
720C-G04	Piping Leachate Treatment System Detail Plan No. 3	D, I
720C-G05	Piping Leachate Treatment System Treatment Building Plan and Sections	D, I
720C-G06	Piping Leachate Treatment System Piping Profile	D, I
720C-G07	Piping Leachate Treatment System Leachate Piping Sections and Details	D
720C-P01	Process & Instrumentation Diagram Leachate Treatment System	C, D
720C-P02	Process & Instrumentation Diagram Existing Leachate Treatment System	C, D

DWG. NO. 720C-G01
PROJ. NO. 55ES1720C

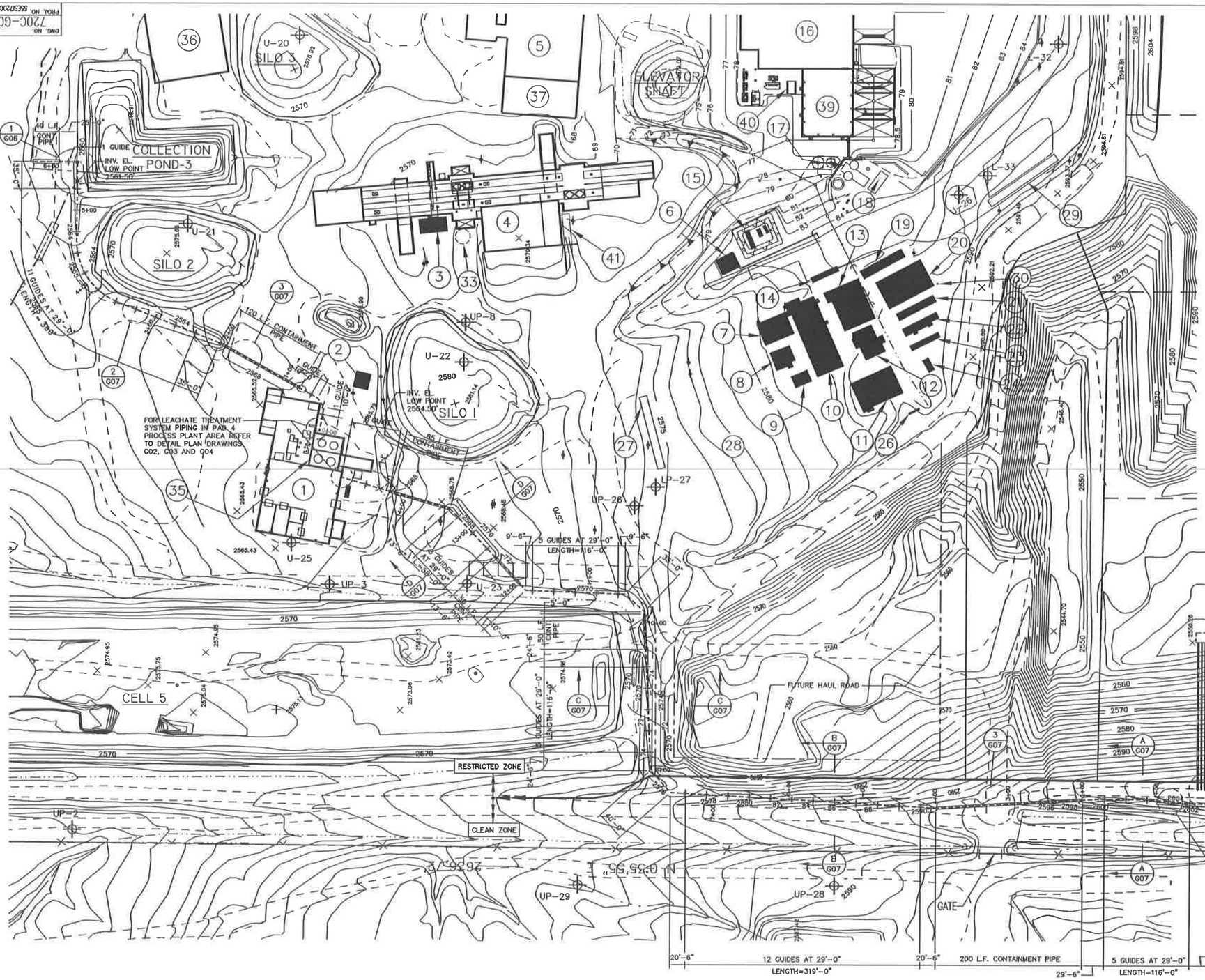

LEGEND

- 5/8" IRON PIN W/ ALUMINUM CAP
- POWER POLE
- 2544.70 — SPOT ELEVATION
- U-14 — WELL
- FENCE LINE
- PROPERTY BOUNDARY
- UNIMPROVED ROAD
- PAVED ROAD
- 2550 — EXISTING TOPOGRAPHY AS OF NOV. 4, 1995
- RCRA UNIT BOUNDARY
- CULVERT
- DRAINAGE
- POND WATER TRANSFER PIPE
- 34 — FACILITY KEY NUMBER
- NEW LEACHATE SYSTEM PIPING
- NEW CONTAINMENT PIPE

FACILITY KEY

1	PAD 4 PROCESS PLANT	21	REGULATORY OFFICE
2	COMPRESSOR/A.C.C. BUILDING	22	STORAGE BUILDING
3	STABILIZATION LAB FACILITY	23	ADMINISTRATION OFFICE NO. 3/ HYDROGEOLOGY
4	STABILIZATION FACILITY	24	IDAHO D.E.Q. TRAILER
5	PCB PROCESSING/STORAGE BUILDING	25	SECURITY BUILDING
6	TRUCK WASH FACILITY	26	PROPANE TANK
7	FIRE HOUSE	27	SAMPLING PLATFORM
8	SAFETY BUILDING	28	STAGING AREA
9	STORAGE BUILDING	29	SCALE
10	MAINTENANCE SHOP/FIELD TECH BUILDING	30	FLAGPOLE
11	DECONTAMINATION BUILDING	31	WEATHER STATION
12	LAB OFFICES	32	DIESEL & PCB STORAGE TANKS
13	RECEIVING OFFICE/LAB/FINANCE	33	UNDERGROUND CLEAN WATER TANK
14	TRUCKERS LOUNGE	34	EVACUATION GATES
15	FUEL STORAGE TANKS	35	RCRA STORAGE TANKS
16	CONTAINMENT BUILDING	36	PAD 5
17	PUMP HOUSE/WATER STORAGE TANKS	37	PAD 6
18	COMPRESSED GAS STORAGE	38	CONTAINER STORAGE AREA NO. 7
19	ADMINISTRATION OFFICE NO. 2	39	STABILIZATION BUILDING
20	ADMINISTRATION/LUNCH ROOM	40	BAGHOUSE
		41	ADDITIVE TRUCK SCALE

REV.	DATE	BY	CHK'D	DESCRIPTION	PROJ. ENGR.	SURV. CHK'D
E	MM/DD/YR	-	-	2003 PERMIT RENEWAL	-	AB MM/DD/YR
D	MM/DD/YR	-	-	ISSUED FOR B PERMIT RENEWAL APPLICATION	-	-
C	MM/DD/YR	AB MM/DD/YR	AB MM/DD/YR	ISSUED FOR BID	AB MM/DD/YR	BL MM/DD/YR
B	MM/DD/YR	-	-	DESIGN UP-DATE	-	-
A	MM/DD/YR	-	-	ISSUED FOR REVIEW	-	-

USEcology Idaho
an American Ecology company

US ECOLOGY IDAHO, INC.
GRAND VIEW, IDAHO
GRAND VIEW IDAHO FACILITY

TITLE:
PIPING
LEACHATE TREATMENT SYSTEM
CELL 14 LEACHATE PLAN

DRN. BY: MK	DATE: 05/21/03	SCALE:	FILE CODE: 720C0001E	REV. NO.
CHECKED	DATE	ENGINEER	DATE	DWG. NO. 720C-G01
PROJ. MGR.	DATE	APPROVED	DATE	PROJ. NO. 55ES1720C

E

NOTE:
CONTRACTOR TO PROVIDE ADDITIONAL SLACK IN PIPE BETWEEN ANCHOR GUIDES TO COMPENSATE FOR THERMAL EXPANSION/CONTRACTION OF THE PIPE.

GRAPHIC SCALE 1"=50'-0"

DWG. NO. 720C-G02
PROJ. NO. 55ESI720C

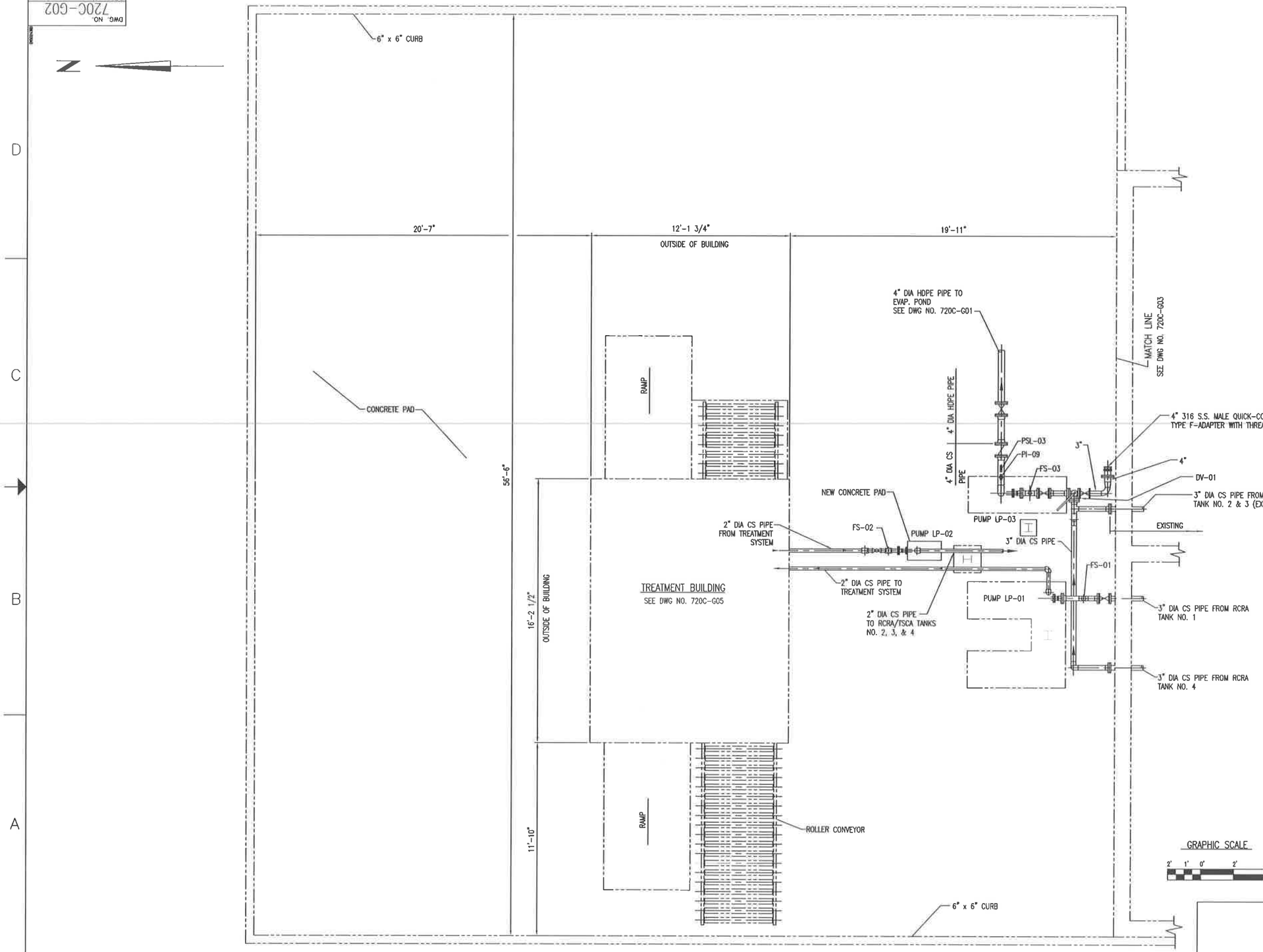

NOTE:

UNLESS OTHERWISE NOTED AS "EXISTING", ALL PUMPS, PIPING, VALVES AND ACCESSORIES INDICATED ON THIS DRAWING ARE NEW.

REV.	BY / DATE	CHK'D / DATE	DESCRIPTION	PROJ. ENGR / DATE	SURV. ENGR / DATE
D	RAN / 3/3/03	- / -	GRAND VIEW IDAHO FACILITY	- / -	AI / 3/3/03
C	EMH / 1/28/98	- / -	ISSUED FOR B PERMIT RENEWAL APPLICATION	- / -	- / -
B	AP/EMH / 7/15/97	AJC / 7/15/97	ISSUED FOR BID	AJC / 7/15/97	DL / 7/15/97
A	EMH / 9/12/97	- / -	ISSUED FOR REVIEW	- / -	- / -

USEcology Idaho
an American Ecology company

US ECOLOGY IDAHO, INC.
GRAND VIEW, IDAHO
GRAND VIEW IDAHO FACILITY

TITLE:
PIPING
LEACHATE TREATMENT SYSTEM
DETAIL PLAN No.1

DRAWN BY: EMH DATE 9/9/97	SCALE:	FILE CODE 72060020	REV. NO.
CHECKED DATE	ENGINEER DATE	DWG. NO. 720C-G02	D
PROJ. MGR. DATE	APPROVED DATE	PROJ. NO. 55ESI720C	

DWG. NO. 720C-G03
PROJ. NO. 55ESI720C

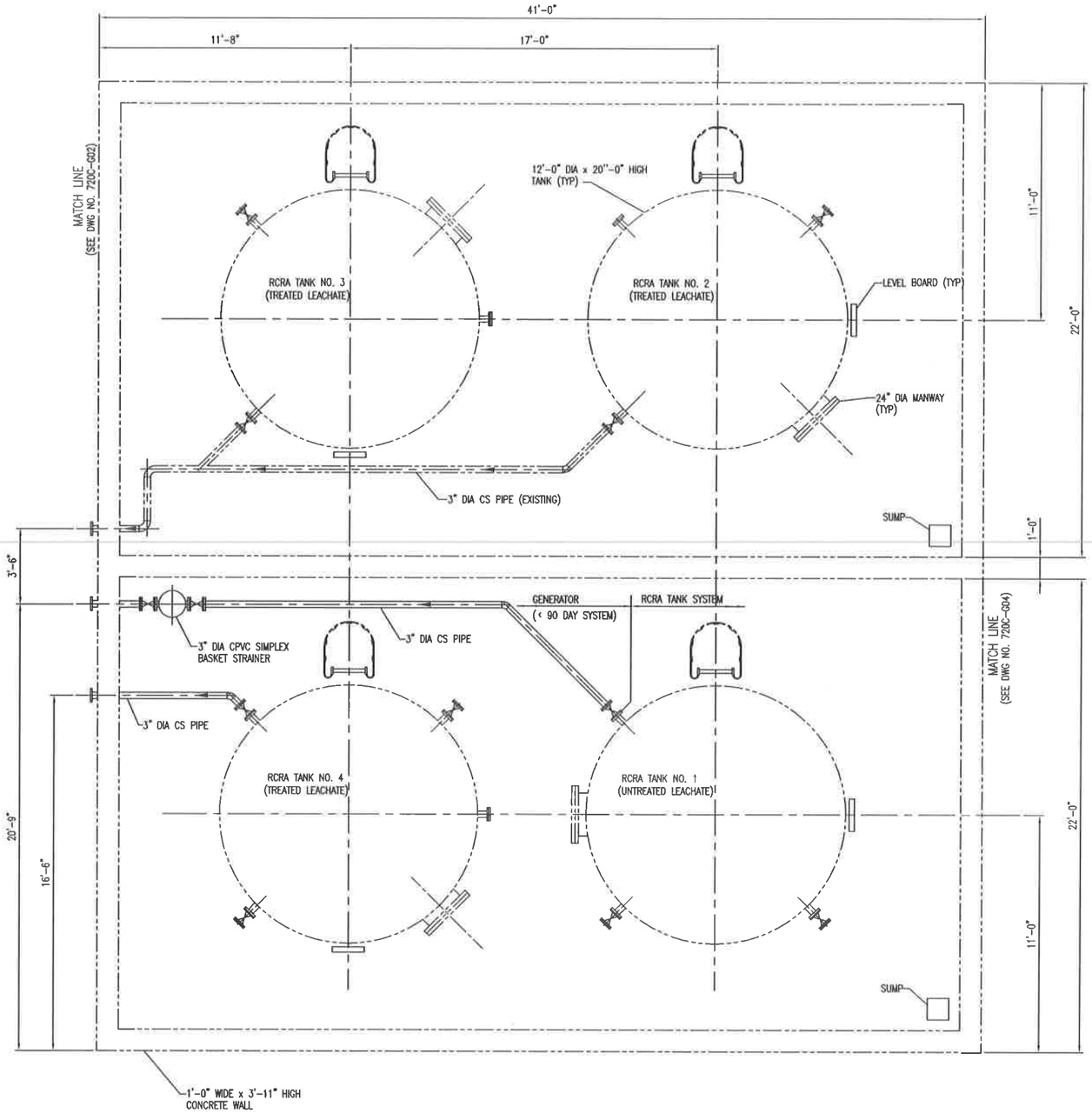

NOTES:

1. UNLESS OTHERWISE NOTED AS "EXISTING" ALL PIPES, VALVES, AND ACCESSORIES INDICATED ON THIS DRAWING ARE NEW.
2. VALVES SHOWN DIRECTLY ATTACHED TO TANK DISCHARGE NOZZLES ARE EXISTING.

GRAPHIC SCALE

2' 1' 0' 2' 4'

REV.	BY / DATE	CHK'D / DATE	DESCRIPTION	PROJ. ENGR / DATE	SUPV. ENGR / DATE
D	AJ / 1/5/10	- / -	2003 PERMIT RENEWAL	- / -	AJ / 1/5/10
C	EMH / 7/20/98	- / -	ISSUED FOR B PERMIT RENEWAL APPLICATION	- / -	- / -
B	AP/EMH / 7/15/98	AJC / 7/15/98	ISSUED FOR BID	AJC / 7/15/98	BL / 7/15/98
A	EMH / 9/12/97	- / -	ISSUED FOR REVIEW	- / -	- / -

US Ecology Idaho
an American Ecology company

US ECOLOGY IDAHO, INC.
GRAND VIEW, IDAHO
GRAND VIEW IDAHO FACILITY

TITLE:
PIPING
LEACHATE TREATMENT SYSTEM
DETAIL PLAN No. 2

DRAWN BY: EMH	DATE 9/9/97	SCALE:	FILE CODE 720C0030	REV. NO.
CHECKED	DATE	ENGINEER	DATE	DWG. NO. 720C-G03	D
PROJ. MGR.	DATE	APPROVED	DATE	PROJ. NO. 55ESI720C	

DWG. NO. 720C-G04
PROJ. NO. 55ESI720C

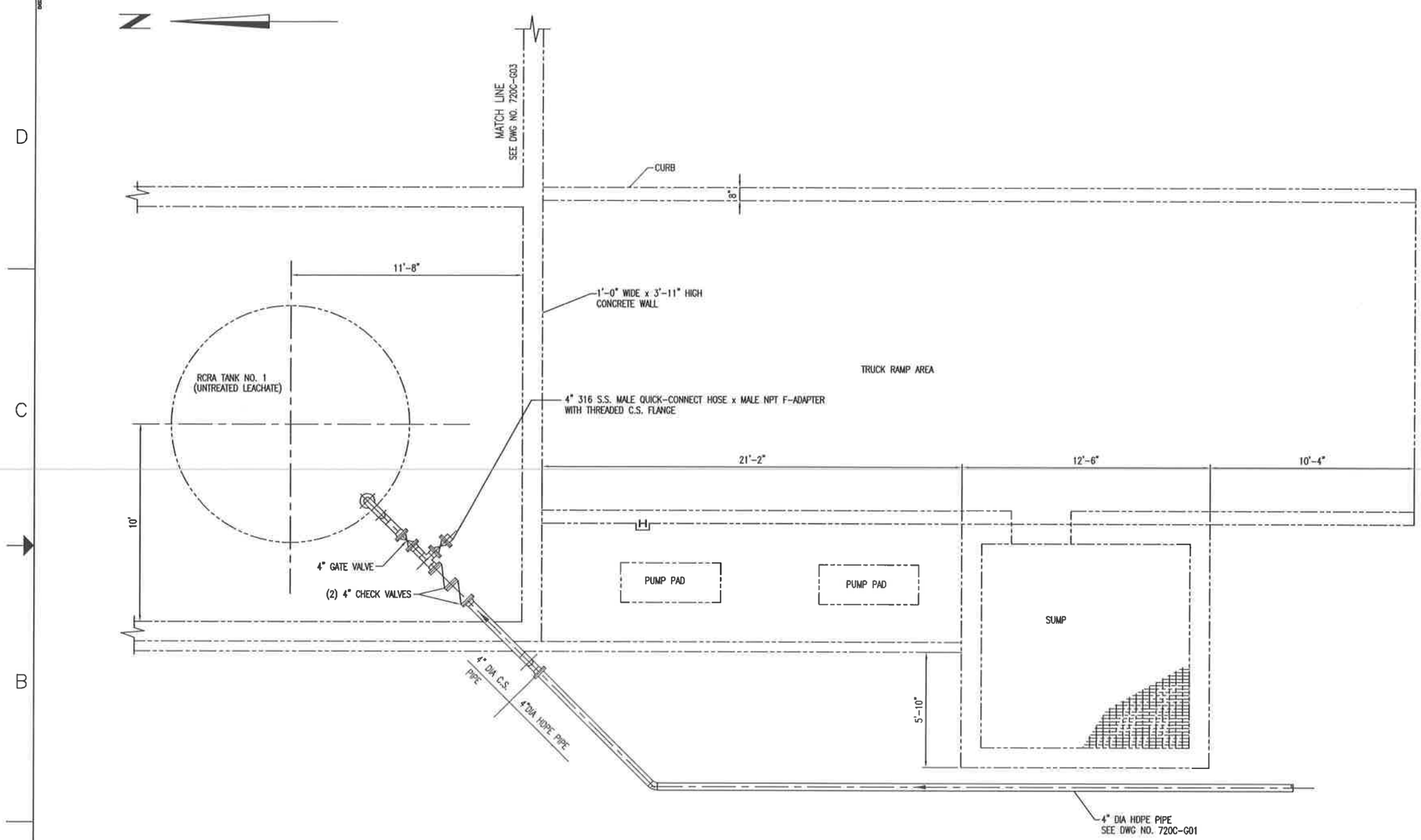

NOTES:

1. UNLESS OTHERWISE NOTED AS "EXISTING" ALL PIPING, VALVES, AND ACCESSORIES INDICATED ON THIS DRAWING ARE NEW.

GRAPHIC SCALE

2' 1' 0' 2' 4'

REV.	BY / DATE	CHK'D / DATE	DESCRIPTION	PROJ. ENGR. / DATE	SUPV. ENGR. / DATE
D	RJN / 5/3/03	- / -	2003 PERMIT RENEWAL	- / -	JH / 5/3/03
C	EMH / 7/28/98	- / -	ISSUED FOR B PERMIT RENEWAL APPLICATION	- / -	- / -
B	AP/EMH / 7/15/98	AIC / 7/15/98	ISSUED FOR BID	AIC / 7/15/98	DL / 7/15/98
A	EMH / 9/12/97	- / -	ISSUED FOR REVIEW	- / -	- / -

US Ecology Idaho
an American Ecology company

US ECOLOGY IDAHO, INC.
GRAND VIEW, IDAHO
GRAND VIEW IDAHO FACILITY

TITLE:
PIPING
LEACHATE TREATMENT SYSTEM
DETAIL PLAN No. 3

DRAWN BY: EMH DATE 9/10/97	SCALE:	FILE CODE 720G004D	REV. NO. D
CHECKED DATE	ENGINEER DATE	DWG. NO. 720C-G04	
PROJ. MGR. DATE	APPROVED DATE	PROJ. NO. 55ESI720C	

DWG. NO. 720C-G05
PROJ. NO. 55ESI720C

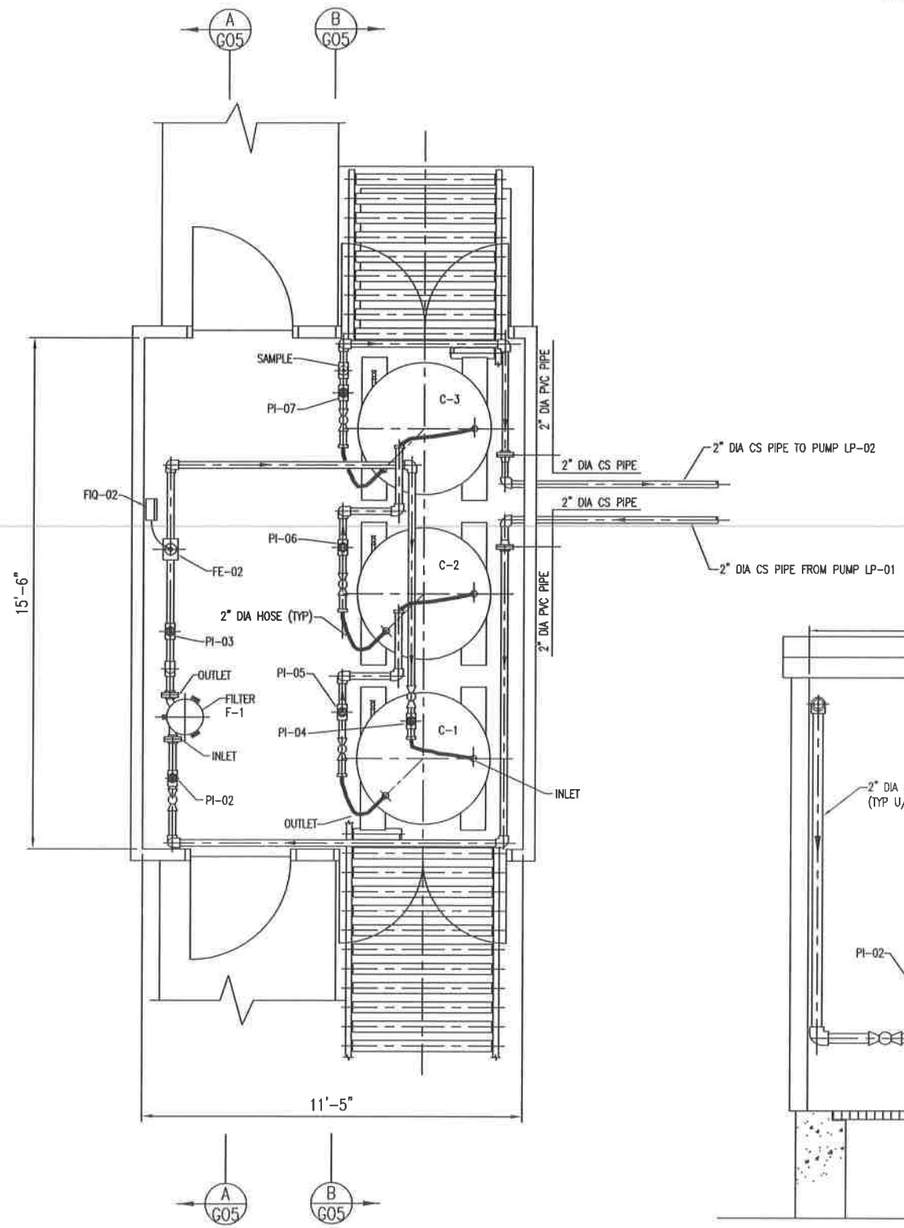

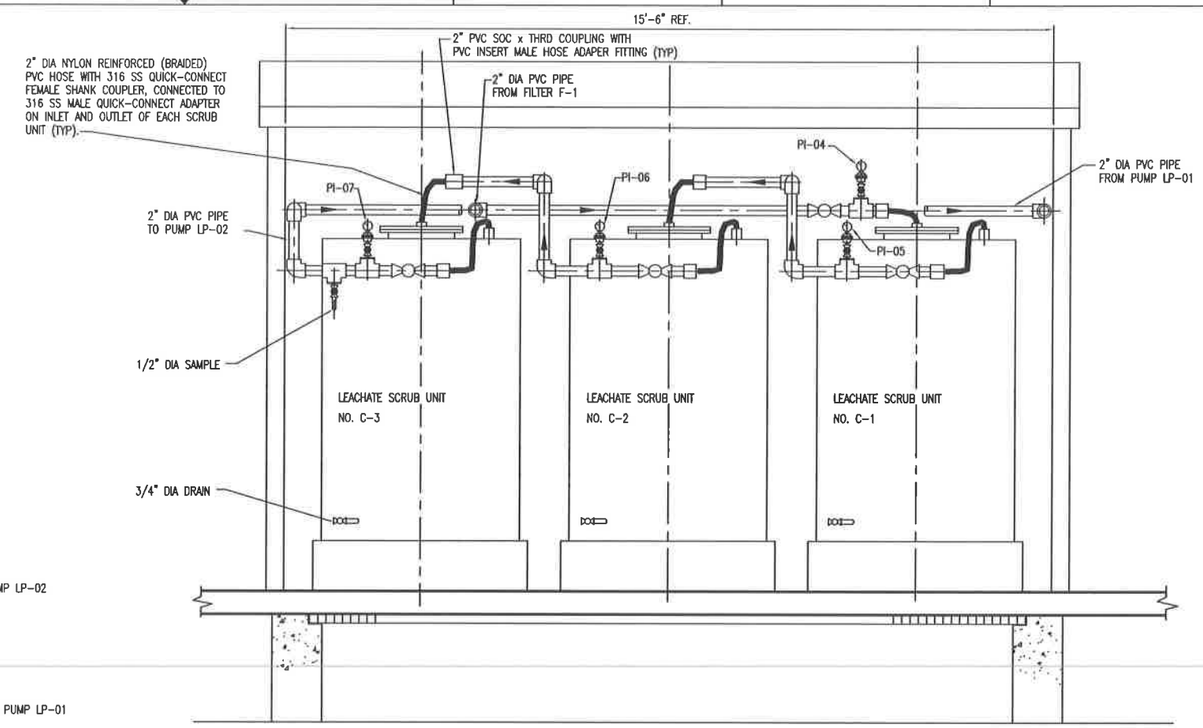

SECTION B - B
SCALE: 3/4"=1'-0"

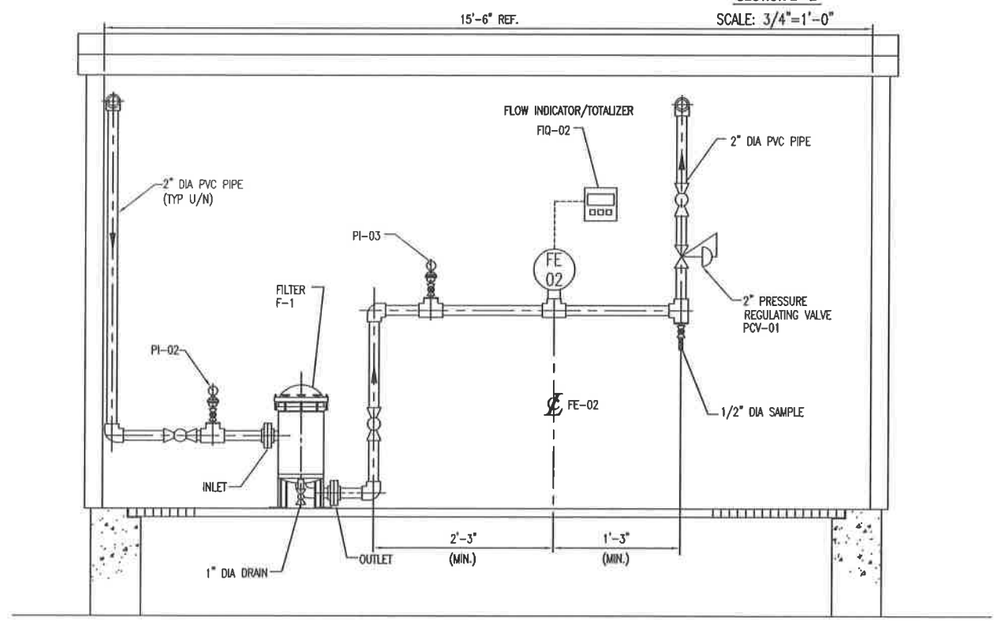

SECTION A - A
SCALE: 3/4"=1'-0"

NOTE:

UNLESS OTHERWISE NOTED AS "EXISTING" ALL PUMPS, PIPING, VALVES AND ACCESSOIRIES INDICATED ON THIS DRAWING ARE NEW.

GRAPHIC SCALES

1/2"=1'-0" 1' 0' 1' 2' 3' 4' 5'

3/4"=1'-0" 1' 6" 0' 1' 2'

REV.	BY / DATE	CHK'D / DATE	DESCRIPTION	PROJ. ENGR. / DATE	SUPV. ENGR. / DATE
E	BJH / 2/3/03	- / -	2003 PERMIT RENEWAL	- / -	JH / 2/3/03
D	EMH / 7/29/98	- / -	ISSUED FOR B PERMIT RENEWAL APPLICATION	- / -	- / -
C	JLPace / 7/15/98	JJC / 7/15/98	ISSUED FOR BID	JJC / 7/15/98	DL / 7/15/98
B	EMH / 9/14/97	- / -	DESIGN UPDATE	- / -	- / -
A	EMH / 9/12/97	- / -	ISSUED FOR REVIEW	- / -	- / -

USEcology Idaho
an American Ecology company

US ECOLOGY IDAHO, INC.
GRAND VIEW, IDAHO
GRAND VIEW IDAHO FACILITY

TITLE:
PIPING
LEACHATE TREATMENT SYSTEM
TREATMENT BUILDING PLAN & SECTIONS

DRAWN BY: EMH DATE 9/12/97	SCALE:	FILE CODE 720C005E	REV. NO. E
CHECKED DATE	ENGINEER DATE	DWG. NO. 720C-G05	
PROJ. MGR. DATE	APPROVED DATE	PROJ. NO. 55ESI720C	

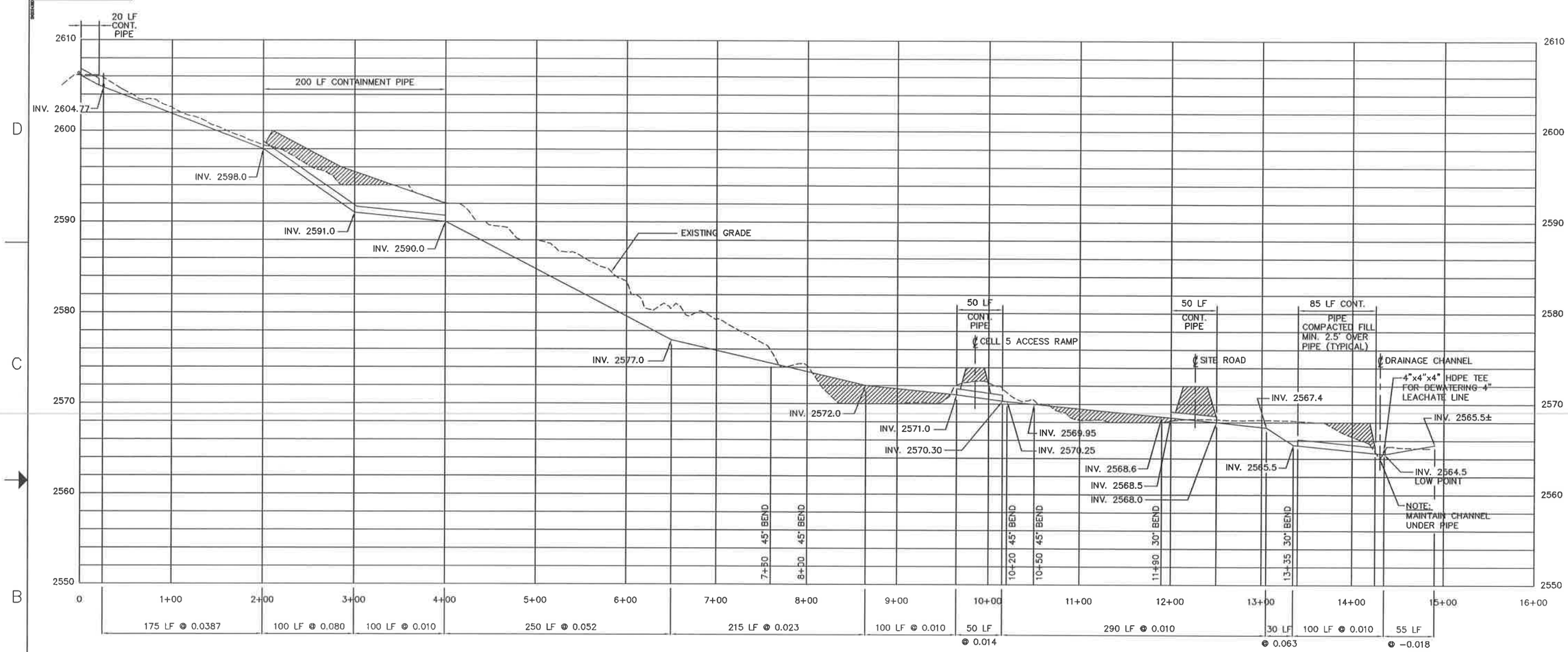

PROFILE OF NEW 4" UNTREATED LEACHATE PIPELINE

SCALE: 1"=50' HORIZ.
1"=5' VERT.

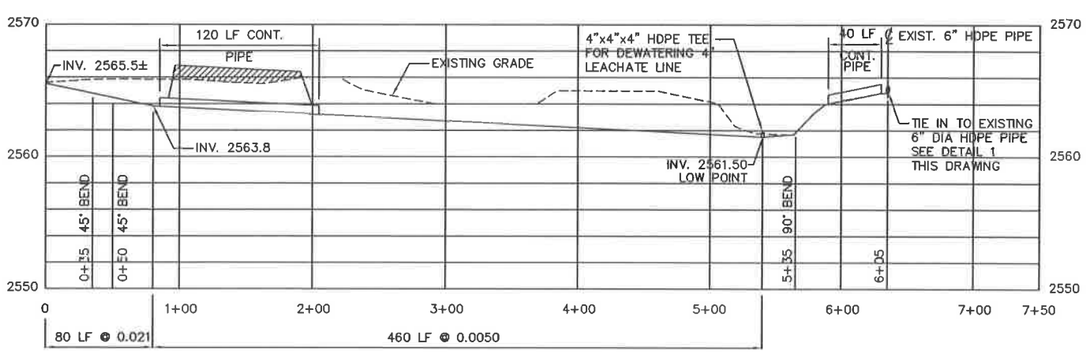

PROFILE OF NEW 4" TREATED LEACHATE PIPELINE

SCALE: 1"=50' HORIZ.
1"=5' VERT.

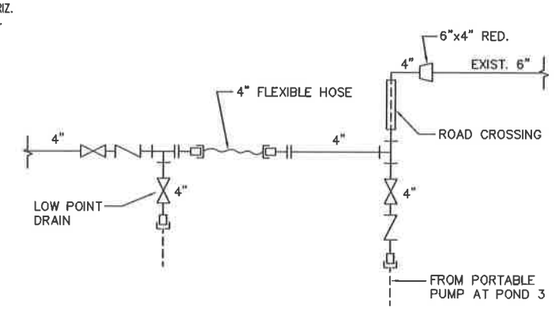

DETAIL 1/G01
SCALE: N.T.S.

REV.	BY / DATE	CHK'D / DATE	DESCRIPTION	PROJ. ENGR. / DATE	SUPV. ENGR. / DATE
C	RJM / 5/5/03	- / -	2003 PERMIT RENEWAL	- / -	JH / 5/5/03
B	BIH / 7/28/98	- / -	ISSUED FOR B PERMIT RENEWAL APPLICATION	- / -	- / -
A	MK / 7/15/98	ARC / 7/15/98	ISSUED FOR BID	ARC / 7/15/98	DL / 7/15/98

USEcology Idaho
an American Ecology company

US ECOLOGY IDAHO, INC.
GRAND VIEW, IDAHO
GRAND VIEW IDAHO FACILITY

TITLE:
PIPING
LEACHATE TREATMENT SYSTEM
LEACHATE PIPING PROFILE

DRAWN BY: MK DATE 5/21/98	SCALE:	FILE CODE 720C0016C	REV. NO.
CHECKED DATE	ENGINEER DATE	DWG. NO. 720C-G06	C
PROJ. MGR. DATE	APPROVED DATE	PROJ. NO. 55ES1720C	

DWG. NO. 720C-G06
PROJ. NO. 55ES1720C

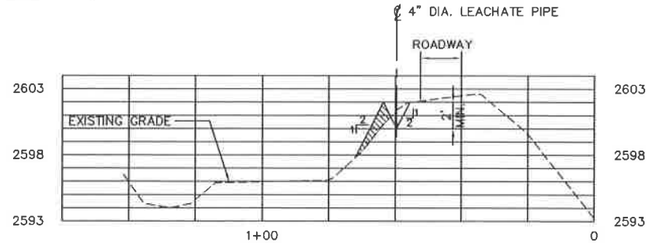

SECTION A G01
SCALE: 1"=20' HORIZ. 1"=5' VERT.

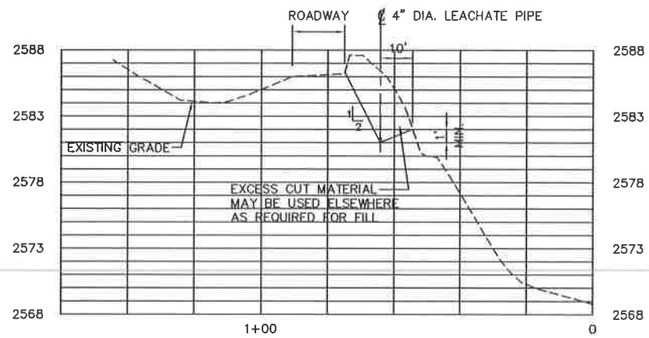

SECTION B G01
SCALE: 1"=20' HORIZ. 1"=5' VERT.

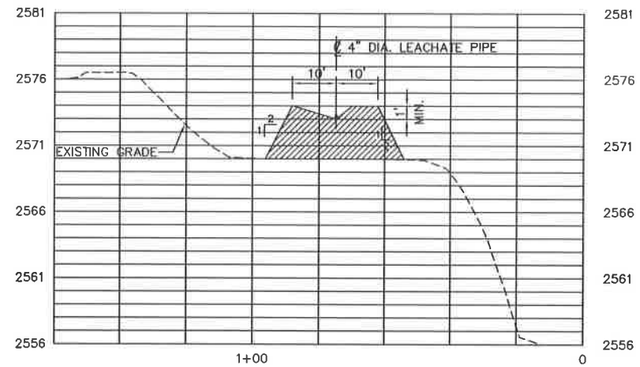

SECTION C G01
SCALE: 1"=20' HORIZ. 1"=5' VERT.

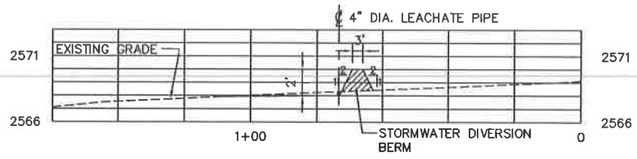

SECTION D G01
SCALE: 1"=20' HORIZ. 1"=5' VERT.

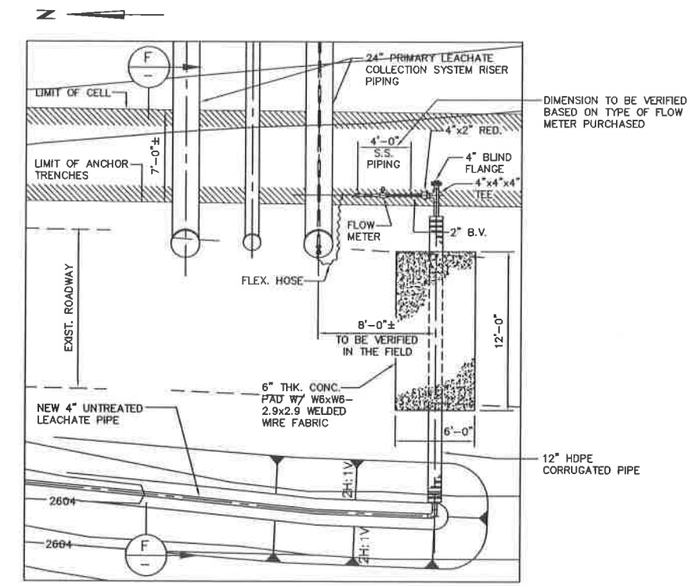

DETAILED PLAN RISER CONNECTION AND ROAD CROSSING
SCALE: 1"=5'

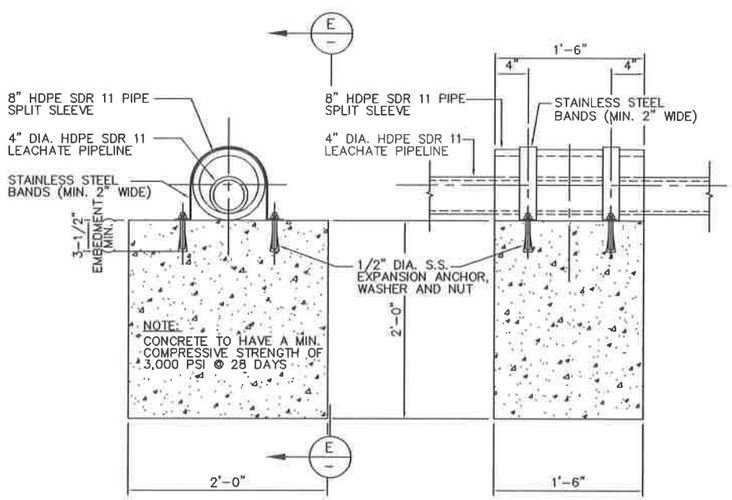

TYPICAL GUIDE DETAIL
DETAIL 2 G01
SCALE: 3/4"=1'-0"

SECTION E –
SCALE: 3/4"=1'-0"

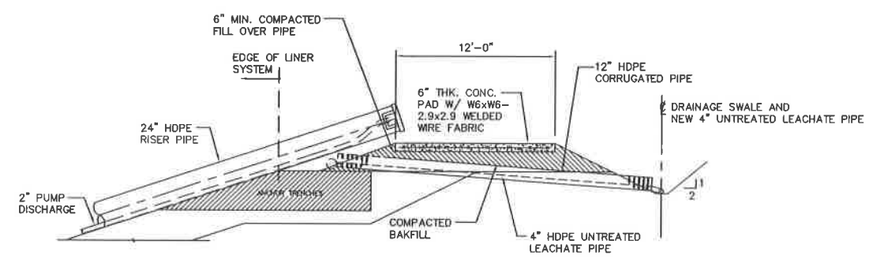

SECTION F –
SCALE: 1"=5'

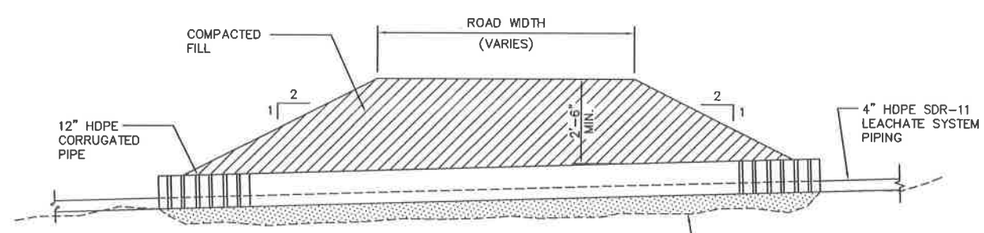

TYPICAL ROADWAY CROSSING DETAIL
DETAIL 3 G01
SCALE: N.T.S.

REV.	BY / DATE	CHK'D / DATE	DESCRIPTION	PROJ. ENGR. / DATE	SURV. ENGR. / DATE
C	RJH / 3/3/10	- / -	2003 PERMIT RENEWAL	- / -	AI / 3/3/10
B	BMH / 7/28/98	- / -	ISSUED FOR B PERMIT RENEWAL APPLICATION	- / -	- / -
A	MK / 7/15/98	ARC / 7/15/98	ISSUED FOR BID	ARC / 7/15/98	DL / 7/15/98

US Ecology Idaho
an American Ecology company

US ECOLOGY IDAHO, INC.
GRAND VIEW, IDAHO
GRAND VIEW IDAHO FACILITY

TITLE:
PIPING
LEACHATE TREATMENT SYSTEM
LEACHATE PIPING SECTIONS AND DETAILS

DRAWN BY: MK	DATE 5/21/98	SCALE:	FILE CODE 7200007C	REV. NO.
CHECKED	DATE	ENGINEER DATE	DWG. NO. 720C-G07	C
PROJ. MGR.	DATE	APPROVED DATE	PROJ. NO. 55ESI720C	

DWG. NO. 720C-G07
PROJ. NO. 55ESI720C

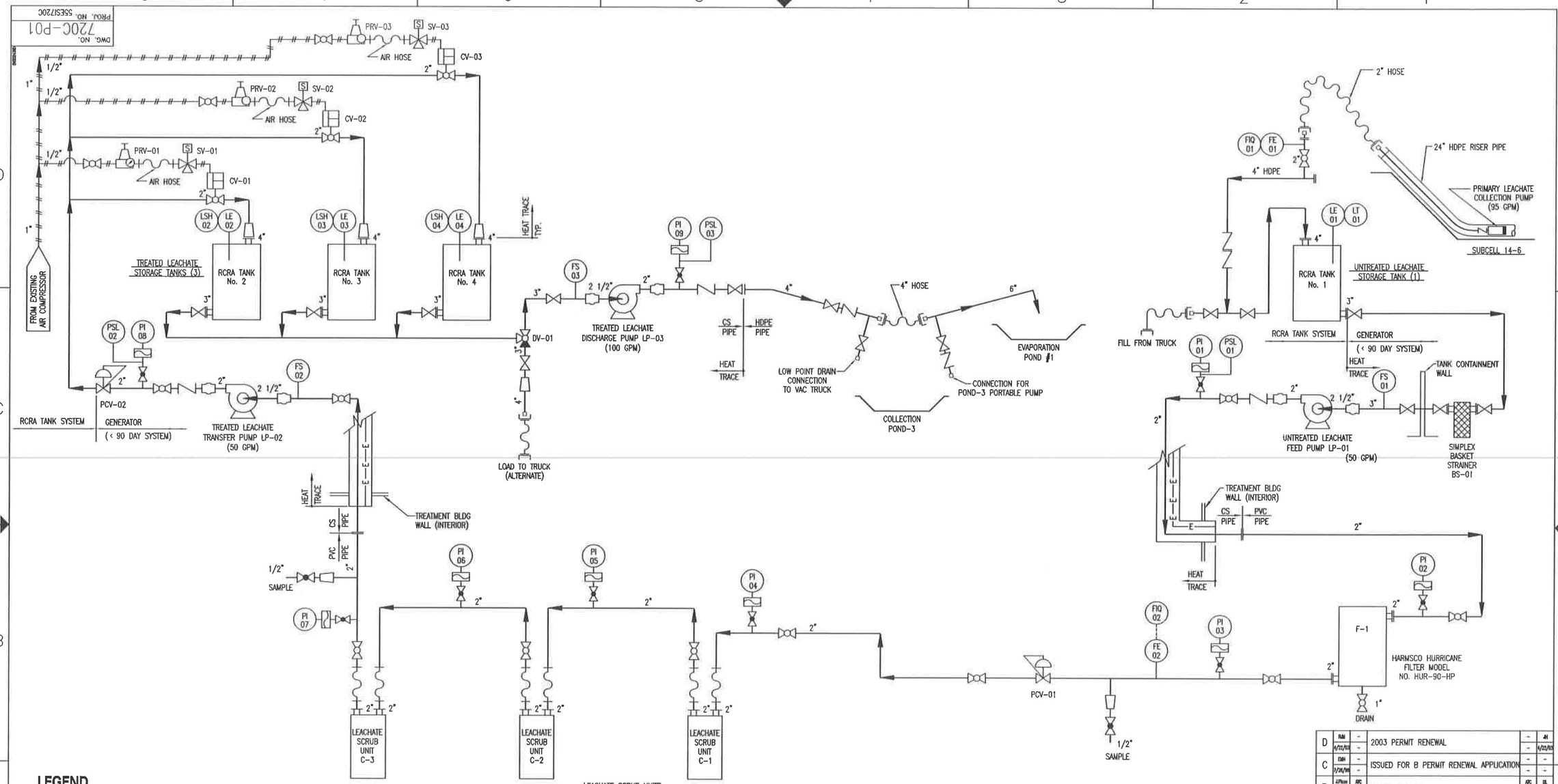

LEGEND

- GLOBE VALVE
- GATE VALVE
- BALL VALVE
- SWING CHECK VALVE
- 3-WAY DIVERTER BALL VALVE (DV)
- 3-WAY SOLENOID VALVE (SV)
- PRESSURE/CONTROL (REGULATING) VALVE (PCV)
- BACK PRESSURE CONTROL (REGULATING) VALVE (PCV)
- AIR-TO-OPEN, SPRING CLOSE PNEUMATIC ACTUATED BALL VALVE (CV)
- COMPRESSED AIR
- AIR PRESSURE REGULATOR W/ GAUGE (PRV)
- PI 00 – PRESSURE INDICATOR (GAUGE) W/ DIAPHRAGM SEAL/GUARD
- PSL 00 – PRESSURE SWITCH (LOW)
- FE 00 – FLOW ELEMENT (SENSOR)
- FIQ 00 – FLOW INDICATOR/TOTALIZER
- FS 00 – FLOW SWITCH
- LE 00 – LEVEL ELEMENT (SENSOR)
- LT 00 – LEVEL TRANSMITTER
- LSH 00 – LEVEL SWITCH (HIGH)
- EXPANSION JOINT
- REDUCING EXPANSION JOINT
- HOSE
- HEAT TRACE AND INSULATION

REV.	BY / DATE	CHK'D / DATE	DESCRIPTION	PROJ. ENGR / DATE	SUPV. ENGR / DATE
D	RJM 4/22/03	- -	2003 PERMIT RENEWAL	- -	JH 4/22/03
C	EBH 7/28/98	- -	ISSUED FOR B PERMIT RENEWAL APPLICATION	- -	- -
B	JJ Nelson 7/15/98	ARC 7/15/98	ISSUED FOR BID	ARC 7/15/98	UL 7/15/98
A	EBH 10/12/97	- -	ISSUED FOR REVIEW	- -	- -

US Ecology Idaho
an American Ecology company

US ECOLOGY IDAHO, INC.
GRAND VIEW, IDAHO
GRAND VIEW IDAHO FACILITY

TITLE:
PROCESS & INSTRUMENTATION DIAGRAM
LEACHATE TREATMENT SYSTEM

DRAWN BY: JZ DATE 5/07/97	SCALE:	FILE CODE 720P0010	REV. NO. D
CHECKED DATE	ENGINEER DATE	DWG. NO. 720C-P01	
PROJ. MGR. DATE	APPROVED DATE	PROJ. NO. 55ESI720C	

DWG. NO. 720C-P02
PROJ. NO. 55ESI720C

TRUCK UNLOADING STATION

CA

CBV

FA

RCRA TANK NO. 1
UNTREATED LEACHATE STORAGE

RCRA TANK NO. 2
TREATED LEACHATE STORAGE

RCRA TANK NO. 3
TREATED LEACHATE STORAGE

RCRA TANK NO. 4
TREATED LEACHATE STORAGE

S

LE

LSH

TANK AREA CONTAINMENT WALL

UNTREATED LEACHATE FEED PUMP

TREATMENT BLDG WALL (INTERIOR)

PARTICULATE FILTER

PARTICULATE FILTER

FLOW INDICATOR/ CONTROLLER

FLOW TOTALIZER/ METER

PI

PSL

3 - 5 GPM

SAMPLE

CARBON FILTER B3

CARBON FILTER B2

CARBON FILTER B1

CARBON FILTER A3

CARBON FILTER A2

CARBON FILTER A1

IN

OUT

BACKFLUSH

LSHH

LSL

TREATED LEACHATE RETURN TANK

TREATED LEACHATE RETURN PUMP

LEGEND

GATE VALVE

BALL VALVE

CHECK VALVE

SOLENOID VALVE

GATE VALVE (CLOSED DURING NORMAL OPERATION)

PI PRESSURE INDICATOR (GAUGE)

LE LEVEL ELEMENT (SENSOR)

LSHH LEVEL SWITCH (HIGH HIGH)

LSH LEVEL SWITCH (HIGH)

LSL LEVEL SWITCH (LOW)

PSL PRESSURE SWITCH (LOW)

CA CARBON ADSORPTION UNIT (VAPOR)

FA VENT-LINE FLAME ARRESTER

CBV CONSERVATION BREATHER VENT

REV.	BY / DATE	CHK'D / DATE	DESCRIPTION	PROJ. ENGR / DATE	SUPV. ENGR / DATE
B	RM 4/22/03	- -	2003 PERMIT RENEWAL	- -	AI 4/22/03
A	EMH 2/28/98	- -	ISSUED FOR B PERMIT RENEWAL APPLICATION	- -	- -

USEcology Idaho
an American Ecology company

US ECOLOGY IDAHO, INC.
GRAND VIEW, IDAHO
GRAND VIEW IDAHO FACILITY

TITLE:
PROCESS & INSTRUMENTATION DIAGRAM
EXISTING LEACHATE TREATMENT SYSTEM

DRAWN BY: EMH	DATE 6/8/98	SCALE:	FILE CODE 720P002B	REV. NO.
CHECKED	DATE	ENGINEER DATE	DWG. NO. 720C-P02	B
PROJ. MGR.	DATE	APPROVED DATE	PROJ. NO. 55ESI720C	

Drawing Number	Drawing Title	May 2014 USEI Permit Application Section Reference
Surface Impoundments and Surface Water Drainage		
PRMI-D01	Facility - Surface Drainage Plan Existing Conditions	D, N
PRMI-D02	Facility - Surface Drainage Plan Interim Conditions	N
PRMI-D03	Facility Surface Drainage Plan Final at Closure	N
PRMI-D05	Civil - Surface Water Typical Drainage Details	D, N
PRMI-D06	Civil - Collection Ponds Nos. 1, 2, & 3 Plan Sections and Details	D, I, N
PRMI-D07	Civil - Collection Ponds Nos. 1, 2, & 3 Plan Sections and Details	D, I, N
PRMI-D08	Civil - Final Closure - Cap Drainage Section and Details	N
PRMI-L41	Civil - Evaporation Pond Typical Plans, Section, and Details	D, I, M
52-01-09	Cell 15 - Site Drainage Existing Conditions and Interim Phase	D

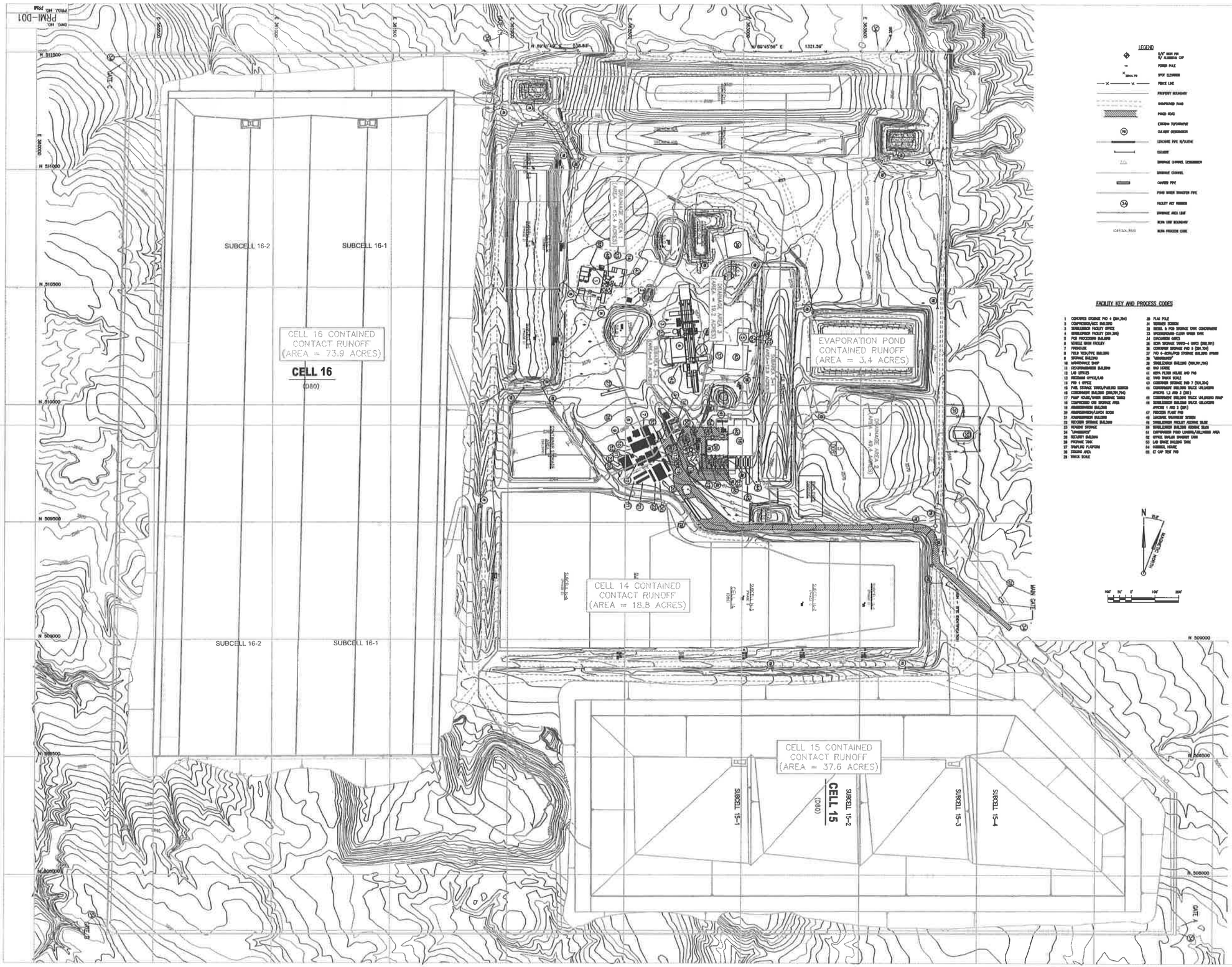

LEGEND

- 5/8" IRON PIN W/ ALUMINUM CAP
- POWER POLE
- SPOT ELEVATION
- FENCE LINE
- PROPERTY BOUNDARY
- UNIMPROVED ROAD
- PAVED ROAD
- EXISTING TOPOGRAPHY
- CULVERT CROSSINGS
- LEACHATE PIPE W/ROUTE
- LEACHATE
- DRAINAGE CHANNEL CROSSINGS
- DRAINAGE CHANNEL
- COVERED PIPE
- POND WATER TRANSFER PIPE
- FACILITY KEY NUMBERS
- DRAINAGE AREA LINE
- BURN UNIT BOUNDARY
- BURN PROCESS CODE

FACILITY KEY AND PROCESS CODES

1 CONTAINER STORAGE PAD 4 (D01,D04)
2 COMPRESSOR/ACC BUILDING
3 SOIL/DEBRIS FACILITY OFFICE
4 SOIL/DEBRIS FACILITY (D01,D04)
5 PCB PROCESSING BUILDING
6 MOBILE BURN FACILITY
7 PERSONNEL
8 FIELD TOOL/PPE BUILDING
9 STORAGE BUILDING
10 MAINTENANCE SHOP
11 CONTAINERIZER BUILDING
12 LAB OFFICES
13 MATERIAL OFFICE/LAB
14 PAD 1 OFFICE
15 FUEL STORAGE TANKS/PUMPS SCALES
16 CONTAINMENT BUILDING (D01,D01,D04)
17 PUMP HOUSE/WATER STORAGE TANKS
18 COMPRESSED AIR STORAGE AREA
19 ANALYSIS/BURN BUILDING
20 ANALYSIS/BURN/LANDFILL BOOM
21 ANALYSIS/BURN BUILDING
22 RECEIVER STORAGE BUILDING
23 REMEDIAL STORAGE
24 "LANDFILL"
25 SECURITY BUILDING
26 PROPANE TANK
27 TRANSFER PLATFORM
28 STAGING AREA
29 TRUCK SCALE
30 FLAG POLE
31 RAINWATER SCREEN
32 DIESEL & PCB STORAGE TANK CONTAINMENT
33 UNDERGROUND CLOSED WATER TANK
34 EXCAVATION AREA
35 BURN STORAGE TANKS-4 TANKS (D02,D01)
36 CONTAINER STORAGE PAD 5 (D01,D04)
37 PAD 6-BURN/PCB STORAGE BUILDING APPROVED
38 "WAREHOUSE"
39 SOIL/DEBRIS BUILDING (D01,D01,D04)
40 BAD HOUSE
41 RCRA FILTER HOUSE AND PAD
42 POND TRUCK SCALE
43 CONTAINER STORAGE PAD 7 (D01,D04)
44 CONTAINMENT BUILDING TRUCK UNLOADING APPROVED 1,2 AND 3 (D01)
45 CONTAINMENT BUILDING TRUCK UNLOADING RAMP
46 SOIL/DEBRIS BUILDING TRUCK UNLOADING APPROVED 1 AND 3 (D01)
47 PROCESS FLARE PAD
48 LANDFILL TRANSFORMER SYSTEM
49 SOIL/DEBRIS FACILITY ASSEMBLY BLDG
50 SOIL/DEBRIS BUILDING ASSEMBLY BLDG
51 EMPOWERMENT POND LOADING/BUILDING AREA
52 OFFICE TRAILER STAGGERED TANK
53 LAB WASTE BUILDING TANK
54 CONTROL HOUSE
55 EZ CAP TEST PAD

EXISTING CHANNEL SCHEDULE*

CHANNEL DESIGNATION	PEAK RUNOFF FLOW (CFS)	FLOW VELOCITY W/ FREEBOARD (FPS)	CHANNEL DEPTH (FT)	CHANNEL WIDTH (FT)	SIDE SLOPE RATIO	CHANNEL LINER
1-A	2.7	15	0.607	2.0	3H:1V	NATIVE SOIL
1-B	1.0	13	0.314	2.0	3H:1V	NATIVE SOIL
1-C	1.0	21	0.632	2.0	3H:1V	NATIVE SOIL
1-D	1.0	20	0.528	2.0	3H:1V	NATIVE SOIL
1-E	1.0	10	0.501	2.0	3H:1V	NATIVE SOIL
1-F	1.0	16	0.634	2.0	3H:1V	NATIVE SOIL
1-G	1.0	10	0.520	2.0	3H:1V	NATIVE SOIL
1-H	1.0	32	0.374	2.0	3H:1V	RIP RAP**
2-A	4.8	86	0.917	2.0	3H:1V	NATIVE SOIL
2-B	4.1	81	0.815	2.0	3H:1V	NATIVE SOIL
2-C	1.0	17	0.622	2.0	3H:1V	NATIVE SOIL
2-D	1.0	17	0.621	2.0	3H:1V	NATIVE SOIL
2-E	3.3	61	0.811	2.0	3H:1V	NATIVE SOIL
2-F	1.0	21	0.633	2.0	3H:1V	NATIVE SOIL
2-G	3.3	19	0.219	2.0	3H:1V	NATIVE SOIL
2-H	1.0	17	0.621	2.0	3H:1V	NATIVE SOIL
3-I	2.0	16	0.418	2.0	3H:1V	NATIVE SOIL
3-J	1.0	23	0.539	2.0	3H:1V	NATIVE SOIL
3-K	1.3	13	0.613	2.0	3H:1V	NATIVE SOIL
3-L	1.0	8	0.308	2.0	3H:1V	NATIVE SOIL
3-M	1.0	13	0.613	2.0	3H:1V	NATIVE SOIL
3-N	1.0	19	0.424	2.0	3H:1V	NATIVE SOIL
3-O	1.0	19	0.823	2.0	3H:1V	NATIVE SOIL
3-P	1.0	19	0.219	2.0	3H:1V	NATIVE SOIL
3-1A	8.2	12	0.240	2.0	3H:1V	NATIVE SOIL
3-1B	5.7	6	0.265	2.0	3H:1V	NATIVE SOIL
3-1C	6.4	12	0.240	2.0	3H:1V	NATIVE SOIL
3-1D	5.7	19	0.822	2.0	3H:1V	NATIVE SOIL
3-1E	1.0	13	0.610	2.0	3H:1V	NATIVE SOIL
3-1F	1.0	17	0.621	2.0	3H:1V	NATIVE SOIL
4-A	1.0	19	0.228	2.0	3H:1V	NATIVE CHANNEL
4-B	3.1	134	0.832	2.0	3H:1V	NATIVE CHANNEL

*ALL CHANNELS MINIMUM AT LEAST 1' FREEBOARD DURING THE 25 YEAR/24 HOUR STORM EVENT.
**RIP RAP MEDIUM ROCK SIZE (d50)=4 IN.

EXISTING CULVERT SCHEDULE

CULVERT DESIGNATION	CULVERT DIAMETER (FT)	CULVERT SHAPE	CULVERT LENGTH (FT)	CULVERT FLOW (CFS)	PIPE SLOPE RATIO	FLOW DEPTH (FT)	FLOW VELOCITY (FPS)	CULVERT INLET PROTECTION
P1	18	CMP	40	0.625	3	6.4	3.8	RIP RAP**
P2	18	CMP	80	0.614	1	5.3	3.5	NONE
P3	18	CMP	34	0.653	1	5.1	1.3	NONE
P4	18	CMP	40	0.608	2	3.5	2.9	NONE
P5	18	CMP	100	0.643	1	4.8	3.7	NONE
P7	18	CMP	88	0.813	1	13.8	7.1	RIP RAP*
P8	18	CMP	90	0.603	3	3.4	3.7	NONE
P9	18	CMP	40	0.840	1	2.8	1.8	NONE
P10	18	CMP	25	0.218	2	4.8	3.7	NONE
P11	18	CMP	25	0.815	1	6.1	3.5	RIP RAP*
P12	18	CMP	15	0.820	2	0.8	13.0	RIP RAP*
P13	18	CMP	140	0.625	3	21.3	12.1	GROUT BULLT
P15	18	CMP	130	0.800	1	20.8	11.8	GROUT BULLT
P16	24	CMP	75	0.810	2	24.8	8.8	RIP RAP*
P17	18	CMP	80	0.810	4	11.7	6.6	RIP RAP*
P18	24	CMP	80	0.838	3	32.8	18.8	NONE
P19	18	CMP	20	0.837	1	7.8	4.4	NONE
P20	18	CMP	80	0.838	1	7.8	4.4	RIP RAP*
P21	18	CMP	40	0.813	1	4.3	2.8	NONE
P22	18	CMP	30	0.807	1	3.8	2.1	NONE
P23	18	CMP	15	0.808	1	2.3	1.3	NONE
P27	18	CMP	70	0.815	1	5.1	2.8	GROUT BULLT 1-3
P28	18	CMP	95	0.828	2	21.8	12.3	GROUT BULLT
P29	18	CMP	115	0.808	3	11.3	6.4	GROUT BULLT
P30	18	CMP	80	0.815	6	25.3	8.1	RIP RAP*
P36	18	CMP	50	0.813	7	12.7	7.2	RIP RAP*
P37	18	CMP	80	0.815	7	9.5	5.4	RIP RAP*
P38	18	CMP	20	0.138	1	18.1	21.6	RIP RAP*
P39	18	CMP	30	0.807	1	20.8	17.5	GROUT BULLT
P40	18	CMP	30	0.808	1	5.8	3.1	GROUT BULLT
P42	18	CMP	80	0.808	3	10.8	5.7	GROUT BULLT
P43	18	CMP	30	0.808	1	9.4	5.5	GROUT BULLT
P44	18	CMP	175	0.807	6	11.4	6.5	RIP RAP*
P45	18	CMP	40	0.838	2	30.8	17.5	GROUT BULLT 1-3
P47	18	CMP	70	0.838	1	17.1	9.7	RIP RAP*
P48	18	CMP	80	0.838	1	23.0	13.5	RIP RAP*
P49	18	CMP	30	0.840	1	7.2	4.4	RIP RAP*
P50	18	CMP	135	0.842	3	15.7	10.7	RIP RAP*

*NEW ROCK SIZE (d50)=4 IN.

DROP INLET SCHEDULE

DROP INLET DESIGNATION	T.A. GRATE ELEV.	INLET ELEVATION (NW 18)	INVERT ELEVATION (NW 18)
A1	2576.25'	NONE	2576.25'
A2	2576.25'	2575.75'	2575.25'
1	2577.00'	2576.50'	2576.00'
1-1	2580.00'	2579.50'	2579.00'
1-2	2583.30'	2579.74'	2579.51'
2	2578.00'	2577.50'	2576.90'
3	2578.00'	2577.50'	2577.00'
4	2576.00'	2575.50'	2575.00'
5	2576.00'	2575.50'	2575.00'
6	2571.25'	2563.75'	2563.00'
7	2570.00'	NONE	2568.00'

GENERAL NOTES:

1. EXISTING SITE TOPOGRAPHY, PHOTOS, PLANVIEWS AND DELINEATION ORIGINATED FROM AERIAL PHOTOGRAPHY AND SURVEYED DATA PROVIDED TO SHAREDSOURCE TECHNOLOGIES BY: J.L. NEWMAN ENGINEERING-SURVEYING, 1475-A HILL ROAD, BOISE, IDAHO 83709, DATE OF ORIGINAL SURVEY - NOVEMBER 4, 1995.
2. ADDITIONALLY, AREAS OF THE SITE HAVE BEEN UPDATED AND INCORPORATED PERIODICALLY INTO THE EXISTING TOPOGRAPHY AS CONSTRUCTION PROCEEDED.
3. REFERENCE FIGURE 1, "OVERALL EXISTING DRAIN PLAN" INCLUDED IN THE SWMP FOR USE OF CONTAINMENT FLOW FROM IN EACH DRAINAGE AREA.

REV.	BY	DATE	DESCRIPTION	CHECK	DATE
H	MJT 4/7/08		PART B PERMIT RENEWAL		
G	MJT 2/7/01		CELL 16		
F	MJT 1/00		CELL 15 MODIFICATIONS		
E	MK 07/00		2003 PERMIT RENEWAL		MK 07/00
D	MK 1/00		ISSUED IN RESPONSE TO NOD LETTER DATED JUNE 30, 1999		MK 1/00
C	MK 9/99		AS-BUILT, SUBMITTED WITH COA REPORT AND CONSTRUCTION CERTIFICATION		MK 9/99
B	MK 1/99		ISSUED FOR JANUARY 1999 CLASS 3 PERMIT MODIFICATION		
A	MK 9/98		ISSUED FOR PART B PERMIT RENEWAL APPLICATION		

US ecology

SITE B
GRAND VIEW, IDAHO
US EPA ID NO. IDD 073 114 654

TITLE:
FACILITY
SURFACE DRAINAGE PLAN
EXISTING CONDITIONS

DRAWN BY: MK 3/4/98	SCALE:	FILE CODE:	REV. NO.
CHECKED:	ENGINEER:	DWG. NO. PRM-001	H
PROJ. MGR.	APPROVED:	PROJ. NO. PRM	

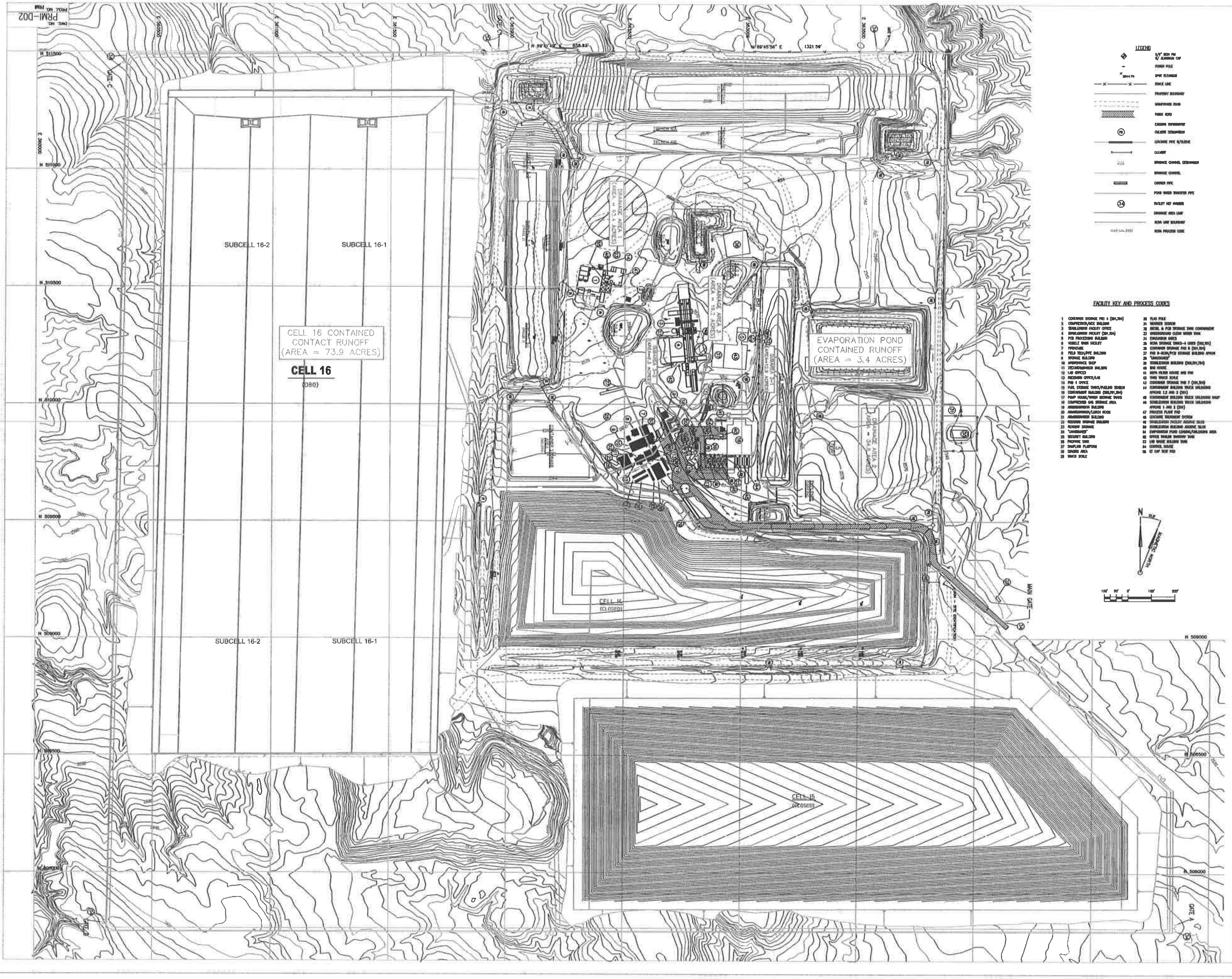

[illegible]						
EXISTING CHANNEL SCHEDULE*						
[illegible]	[illegible]	[illegible]	[illegible]	[illegible]	[illegible]	CHANNEL LINING
1-A	2.7	18	0.027	2.0	3H:1V	NATIVE SOIL
1-B	1.4	15	0.018	2.0	3H:1V	NATIVE SOIL
1-C	1.0	21	0.032	2.0	3H:1V	NATIVE SOIL
1-D	1.0	20	0.028	2.0	3H:1V	NATIVE SOIL
1-E	1.0	10	0.024	2.0	3H:1V	NATIVE SOIL
1-F	1.0	18	0.056	2.0	3H:1V	NATIVE SOIL
1-G	1.0	18	0.035	2.0	3H:1V	NATIVE SOIL
1-H	1.0	22	0.074	2.0	3H:1V	RIP RAP**
2-A	4.4	99	0.017	2.0	3H:1V	NATIVE SOIL
2-B	4.1	91	0.015	2.0	3H:1V	NATIVE SOIL
2-C	1.0	17	0.022	2.0	3H:1V	NATIVE SOIL
2-D	1.0	17	0.021	2.0	3H:1V	NATIVE SOIL
2-E	3.2	81	0.012	2.0	3H:1V	NATIVE SOIL
2-F	1.0	21	0.033	2.0	3H:1V	NATIVE SOIL
2-G	2.3	16	0.019	2.0	3H:1V	NATIVE SOIL
2-H	1.0	17	0.021	2.0	3H:1V	NATIVE SOIL
2-I	2.0	16	0.018	2.0	3H:1V	NATIVE SOIL
2-J	1.8	22	0.038	2.0	3H:1V	NATIVE SOIL
2-K	1.3	13	0.013	2.0	3H:1V	NATIVE SOIL
2-L	1.0	9	0.008	2.0	3H:1V	NATIVE SOIL
2-M	1.0	13	0.013	2.0	3H:1V	NATIVE SOIL
2-N	1.0	16	0.028	2.0	3H:1V	NATIVE SOIL
2-O	1.0	18	0.023	2.0	3H:1V	NATIVE SOIL
2-P	1.0	18	0.018	2.0	3H:1V	NATIVE SOIL
2-1A	8.2	12	0.010	2.0	3H:1V	NATIVE SOIL
2-1B	4.7	9	0.005	2.0	3H:1V	NATIVE SOIL
2-1C	4.4	12	0.010	2.0	3H:1V	NATIVE SOIL
2-1D	5.7	18	0.022	2.0	3H:1V	NATIVE SOIL
2-1E	1.1	12	0.010	2.0	3H:1V	NATIVE SOIL
2-1F	1.0	17	0.021	2.0	3H:1V	NATIVE SOIL
4-A	1.4	16	0.028	2.0	3H:1V	NATIVE GRAVEL
4-B	3.1	134	0.031	2.0	3H:1V	NATIVE GRAVEL

*ALL CHANNELS MAINTAIN AT LEAST 1' FREEBOARD DURING THE 25 YEAR/24 HOUR STORM EVENT.
**RIP RAP MEAN ROCK SIZE (d50)=4 IN.

[illegible]								
EXISTING CULVERT SCHEDULE								
[illegible]	[illegible]	[illegible]	[illegible]	[illegible]	[illegible]	[illegible]	[illegible]	[illegible]
P1	18	CMP	40	0.025	3	6.6	3.8	[illegible]
P3	18	CMP	80	0.059	1	5.3	3.9	NONE
P4	18	CPP	35	0.003	1	2.1	1.2	NONE
P5	18	CMP	40	0.008	2	3.5	2.0	NONE
P6	18	CMP	100	0.010	1	4.8	2.7	NONE
P7	18	CPP	60	0.012	1	12.8	7.1	RIP RAP*
P8	18	CMP	80	0.005	2	3.0	1.7	NONE
P9	18	CMP	40	0.005	1	2.8	1.6	NONE
P10	18	CMP	25	0.019	2	4.8	2.7	NONE
P11	18	CMP	25	0.021	2	6.2	3.5	RIP RAP*
P13	18	CPP	40	0.050	3	24.0	13.6	RIP RAP*
P14	18	CPP	140	0.025	3	21.5	12.2	DROP INLET
P15	18	CPP	135	0.090	1	28.6	16.8	DROP INLET
P16	24	CPP	75	0.010	3	26.6	8.6	RIP RAP*
P17	18	CPP	60	0.010	4	11.7	6.6	RIP RAP*
P18	24	CPP	60	0.020	5	28.8	16.6	NONE
P19	18	CMP	30	0.007	1	7.8	4.4	NONE
P20	18	CMP	30	0.020	1	7.8	4.4	RIP RAP*
P21	18	CMP	40	0.013	1	4.5	2.6	NONE
P22	18	CMP	30	0.007	1	3.8	1.9	NONE
P23	18	CMP	10	0.005	1	2.2	1.3	NONE
P24	18	CMP	25	0.012	1	5.1	2.9	DROP INLET 1-1
P25	18	CPP	60	0.020	3	21.9	12.3	DROP INLET
P26	18	CPP	115	0.008	3	11.3	6.4	DROP INLET 2
P27	24	CPP	60	0.010	8	25.3	8.1	RIP RAP*
P28	18	CPP	30	0.013	7	12.7	7.3	RIP RAP*
P29	24	CMP	40	0.015	7	6.5	3.6	RIP RAP*
P30	18	CPP	30	0.188	9	38.1	21.8	[illegible]
P31	18	CPP	30	0.087	1	30.9	17.5	DROP INLET 5
P32	18	CPP	35	0.008	1	9.8	5.1	DROP INLET 4
P33	18	CPP	35	0.008	2	10.8	5.7	DROP INLET 3
P34	18	CPP	30	0.008	3	9.8	5.5	DROP INLET 6
P35	18	CPP	175	0.007	8	11.4	6.3	RIP RAP*
P36	18	CPP	45	0.076	2	30.8	17.4	DROP INLET 1-[illegible]
P37	18	CPP	70	0.020	1	17.1	9.7	RIP RAP*
P38	18	CPP	80	0.032	1	22.0	12.5	RIP RAP*
P39	18	CPP	35	0.040	1	7.8	4.4	RIP RAP*
P40	18	CPP	235	0.042	3	10.7	10.7	RIP RAP*

*MEAN ROCK SIZE (d50)=4 IN.

[illegible]			
DROP INLET SCHEDULE			
[illegible]	INLET T.A. [illegible]	INLET CULVERT [illegible]	OUTLET CULVERT [illegible]
A1	2578.27'	NONE	2576.07'
A2	2576.25'	2575.56'	2575.85'
1	2577.00'	2570.57'	2570.46'
1-1	2580.50'	2575.67'	2575.67'
1-2	2583.50'	2576.74'	2576.51'
2	2578.50'	2571.81'	2570.90'
3	2576.00'	2571.86'	2571.67'
4	2578.00'	2571.36'	2571.30'
5	2576.00'	2571.86'	2571.56'
6	2571.25'	2563.75'	2562.80'
7	2570.00'	NONE	2568.03'

GENERAL NOTES:

1. EXISTING SITE TOPOGRAPHY, PHYSICAL FEATURES AND DELINEATIONS DERIVED FROM AERIAL PHOTOGRAPHY AND SURVEYED DATA PROVIDED TO ENVIROSOURCE TECHNOLOGIES BY: A.J. HOWARD ENGINEERING-SURVEYING, 1775-A HILL ROAD; BOISE, IDAHO [illegible] ORIGINAL SURVEY – NOVEMBER 4, 1985.
2. ADDITIONALLY, AREAS OF THE SITE HAVE BEEN UPDATED AND INCORPORATED PERIODICALLY INTO THE EXISTING TOPOGRAPHY AS CONSTRUCTION PROGRESSES.
3. REFERENCE FIGURE 1, "OVERALL DRAINAGE AREAS PLAN" (INCLUDED IN THE [illegible]) FOR SIZE OF CONTRIBUTING FLOW AREAS IN EACH DRAINAGE AREA.

REV.	BY / DATE	CHK'D / DATE	DESCRIPTION
B	[illegible]		PART B PERMIT RENEWAL
A	[illegible]		CELL 16

US ecology

SITE B
GRAND VIEW, IDAHO
US EPA ID NO. IDD 073 114 654

TITLE: FACILITY
SURFACE DRAINAGE PLAN
INTERIM CONDITIONS

DRAWN BY: NJT DATE: 7/1/11
DWG. NO. PRMI-D02
PROJ. NO. PRMI
REV. NO. B

DWG. NO.
PRMI-D03
PROJ. NO. P508

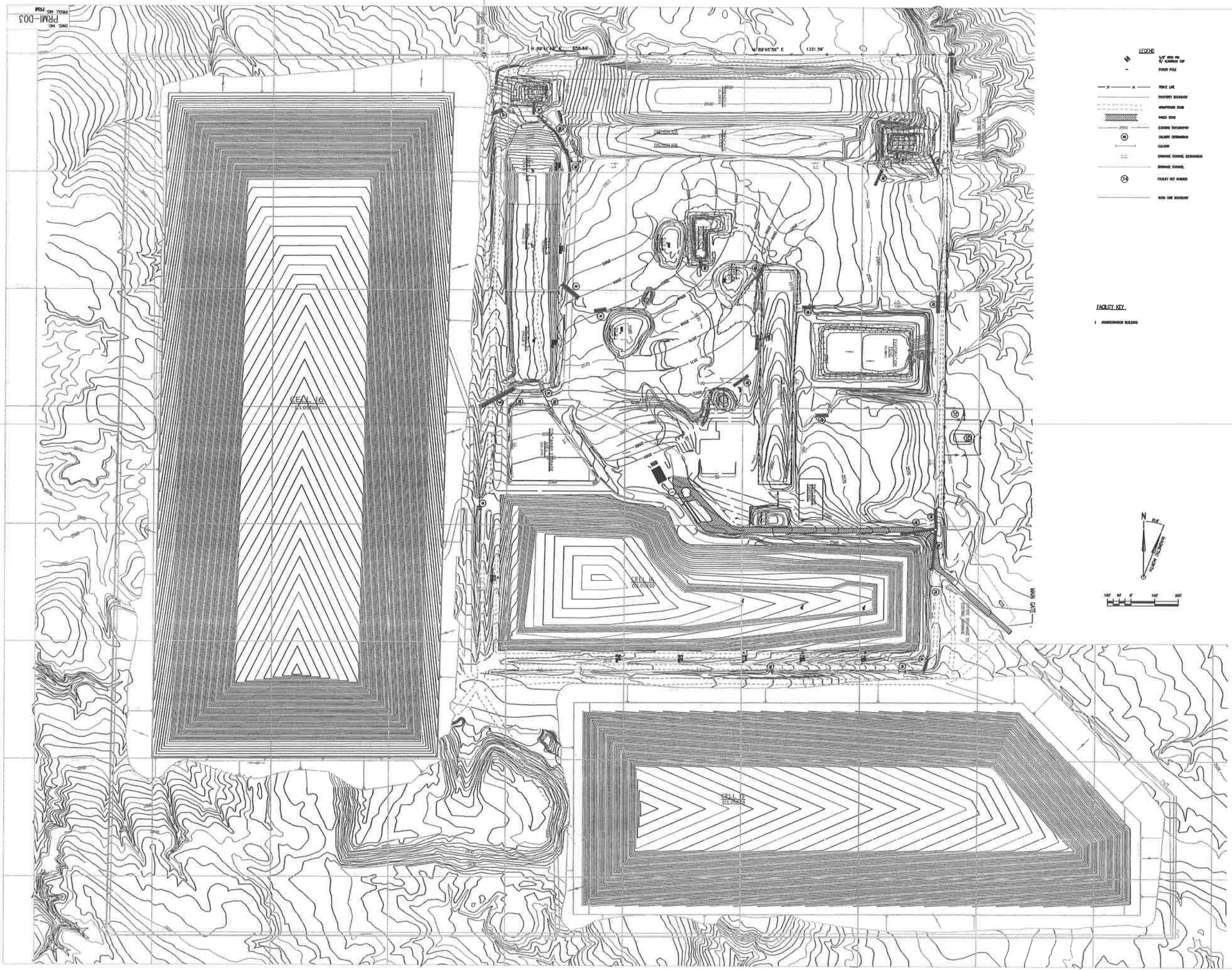

LEGEND

- 5/8" IRON PIN W/ ALUMINUM CAP
- POWER POLE
- FENCE LINE
- PROPERTY BOUNDARY
- GRAVEL/DIRT ROAD
- PAVED ROAD
- EXISTING CONTOUR
- CULVERT DESIGNATION
- CULVERT
- DRAINAGE CHANNEL DESIGNATION
- DRAINAGE CHANNEL
- FACILITY KEY NUMBER
- SITE LINE BOUNDARY

FACILITY KEY

1 ADMINISTRATION BUILDING

FINAL CHANNEL SCHEDULE*

CHANNEL DESIGNATION	PEAK FLOW (CFS)	FLOW CAPACITY W/ 1' FREEBOARD (CFS)	CHANNEL SLOPE (FT/FT)	CHANNEL WIDTH (FT)	SIDE SLOPE (H:V)	CHANNEL LINING
1-A	5.5	16	0.007	1.0	3H:1V	MAINE SOIL
1-B	5.1	13	0.014	1.0	3H:1V	MAINE SOIL
1-C	5.3	21	0.032	1.0	3H:1V	MAINE SOIL
1-D	1.8	26	0.032	1.0	3H:1V	MAINE SOIL
1-E	1.7	16	0.024	1.0	3H:1V	MAINE SOIL
1-F	1.0	19	0.024	1.0	3H:1V	MAINE SOIL
1-G	1.0	19	0.025	1.0	3H:1V	MAINE SOIL
1-H	1.0	32	0.074	1.0	3H:1V	RIP RAP**
1-I	8.1	39	0.030	1.0	3H:1V	MAINE GRAVEL
1-J	3.7	29	0.031	1.0	3H:1V	MAINE GRAVEL
1-K	1.2	8	0.005	1.0	3H:1V	MAINE SOIL
2-A	4.4	88	0.017	1.0	3H:1V	MAINE SOIL
2-B	3.5	91	0.015	1.0	3H:1V	MAINE SOIL
2-C	1.0	17	0.012	1.0	3H:1V	MAINE SOIL
2-D	1.0	17	0.021	1.0	3H:1V	MAINE SOIL
2-E	1.0	91	0.012	1.0	3H:1V	MAINE SOIL
2-F	1.0	21	0.013	1.0	3H:1V	MAINE SOIL
2-G	3.3	16	0.019	1.0	3H:1V	MAINE SOIL
2-H	1.5	17	0.021	1.0	3H:1V	MAINE SOIL
2-I	3.8	16	0.016	1.0	3H:1V	MAINE SOIL
2-J	1.0	22	0.009	1.0	3H:1V	MAINE SOIL
2-K	1.5	13	0.013	1.0	3H:1V	MAINE SOIL
2-L	1.0	13	0.013	1.0	3H:1V	MAINE SOIL
2-M	1.0	19	0.014	1.0	3H:1V	MAINE SOIL
2-N	1.0	19	0.021	1.0	3H:1V	MAINE SOIL
2-O	1.0	19	0.021	1.0	3H:1V	MAINE SOIL
2-P	1.0	19	0.019	1.0	3H:1V	MAINE SOIL
2-Q	1.0	19	0.019	1.0	3H:1V	MAINE SOIL
2-R	5.4	19	0.020	1.0	3H:1V	MAINE SOIL
2-S	5.7	19	0.020	1.0	3H:1V	MAINE SOIL
2-T	5.7	19	0.020	1.0	3H:1V	MAINE SOIL
2-U	1.0	17	0.021	1.0	3H:1V	MAINE SOIL

*ALL CHANNELS MINIMUM AT LEAST 1' FREEBOARD DURING THE 25 YEAR/24 HOUR STORM EVENT.
**RIP RAP MEAN ROCK SIZE (d50)=6 IN.

FINAL CULVERT SCHEDULE

CULVERT DESIGNATION	CULVERT DIAMETER (FT)	CULVERT CHANNEL	CULVERT LENGTH (FT)	CULVERT SLOPE (FT/FT)	PEAK FLOW (CFS)	FLOW CAPACITY (CFS)	INLET VELOCITY (FT/S)	CULVERT INLET TREATMENT
P1	18	CMP	18	0.020	2	6.1	3.4	HEADWALL
P2	18	CMP	18	0.020	2	6.1	3.4	HEADWALL
P3	18	CMP	18	0.020	2	6.1	3.4	HEADWALL
P4	18	CMP	18	0.020	2	6.1	3.4	HEADWALL
P5	18	CMP	18	0.020	2	6.1	3.4	HEADWALL
P6	18	CMP	18	0.020	2	6.1	3.4	HEADWALL
P7	18	CMP	18	0.020	2	6.1	3.4	HEADWALL
P8	18	CMP	18	0.020	2	6.1	3.4	HEADWALL
P9	18	CMP	18	0.020	2	6.1	3.4	HEADWALL
P10	18	CMP	18	0.020	2	6.1	3.4	HEADWALL
P11	18	CMP	18	0.020	2	6.1	3.4	HEADWALL
P12	18	CMP	18	0.020	2	6.1	3.4	HEADWALL
P13	18	CMP	18	0.020	2	6.1	3.4	HEADWALL
P14	18	CMP	18	0.020	2	6.1	3.4	HEADWALL
P15	18	CMP	18	0.020	2	6.1	3.4	HEADWALL
P16	18	CMP	18	0.020	2	6.1	3.4	HEADWALL
P17	18	CMP	18	0.020	2	6.1	3.4	HEADWALL
P18	18	CMP	18	0.020	2	6.1	3.4	HEADWALL
P19	18	CMP	18	0.020	2	6.1	3.4	HEADWALL
P20	18	CMP	18	0.020	2	6.1	3.4	HEADWALL
P21	18	CMP	18	0.020	2	6.1	3.4	HEADWALL
P22	18	CMP	18	0.020	2	6.1	3.4	HEADWALL
P23	18	CMP	18	0.020	2	6.1	3.4	HEADWALL
P24	18	CMP	18	0.020	2	6.1	3.4	HEADWALL
P25	18	CMP	18	0.020	2	6.1	3.4	HEADWALL
P26	18	CMP	18	0.020	2	6.1	3.4	HEADWALL
P27	18	CMP	18	0.020	2	6.1	3.4	HEADWALL
P28	18	CMP	18	0.020	2	6.1	3.4	HEADWALL
P29	18	CMP	18	0.020	2	6.1	3.4	HEADWALL
P30	18	CMP	18	0.020	2	6.1	3.4	HEADWALL
P31	18	CMP	18	0.020	2	6.1	3.4	HEADWALL
P32	18	CMP	18	0.020	2	6.1	3.4	HEADWALL
P33	18	CMP	18	0.020	2	6.1	3.4	HEADWALL
P34	18	CMP	18	0.020	2	6.1	3.4	HEADWALL
P35	18	CMP	18	0.020	2	6.1	3.4	HEADWALL
P36	18	CMP	18	0.020	2	6.1	3.4	HEADWALL
P37	18	CMP	18	0.020	2	6.1	3.4	HEADWALL
P38	18	CMP	18	0.020	2	6.1	3.4	HEADWALL
P39	18	CMP	18	0.020	2	6.1	3.4	HEADWALL
P40	18	CMP	18	0.020	2	6.1	3.4	HEADWALL
P41	18	CMP	18	0.020	2	6.1	3.4	HEADWALL
P42	18	CMP	18	0.020	2	6.1	3.4	HEADWALL
P43	18	CMP	18	0.020	2	6.1	3.4	HEADWALL
P44	18	CMP	18	0.020	2	6.1	3.4	HEADWALL
P45	18	CMP	18	0.020	2	6.1	3.4	HEADWALL
P46	18	CMP	18	0.020	2	6.1	3.4	HEADWALL
P47	18	CMP	18	0.020	2	6.1	3.4	HEADWALL
P48	18	CMP	18	0.020	2	6.1	3.4	HEADWALL
P49	18	CMP	18	0.020	2	6.1	3.4	HEADWALL
P50	18	CMP	18	0.020	2	6.1	3.4	HEADWALL
P51	18	CMP	18	0.020	2	6.1	3.4	HEADWALL
P52	18	CMP	18	0.020	2	6.1	3.4	HEADWALL
P53	18	CMP	18	0.020	2	6.1	3.4	HEADWALL
P54	18	CMP	18	0.020	2	6.1	3.4	HEADWALL
P55	18	CMP	18	0.020	2	6.1	3.4	HEADWALL
P56	18	CMP	18	0.020	2	6.1	3.4	HEADWALL
P57	18	CMP	18	0.020	2	6.1	3.4	HEADWALL
P58	18	CMP	18	0.020	2	6.1	3.4	HEADWALL
P59	18	CMP	18	0.020	2	6.1	3.4	HEADWALL
P60	18	CMP	18	0.020	2	6.1	3.4	HEADWALL
P61	18	CMP	18	0.020	2	6.1	3.4	HEADWALL
P62	18	CMP	18	0.020	2	6.1	3.4	HEADWALL
P63	18	CMP	18	0.020	2	6.1	3.4	HEADWALL
P64	18	CMP	18	0.020	2	6.1	3.4	HEADWALL
P65	18	CMP	18	0.020	2	6.1	3.4	HEADWALL
P66	18	CMP	18	0.020	2	6.1	3.4	HEADWALL
P67	18	CMP	18	0.020	2	6.1	3.4	HEADWALL
P68	18	CMP	18	0.020	2	6.1	3.4	HEADWALL
P69	18	CMP	18	0.020	2	6.1	3.4	HEADWALL
P70	18	CMP	18	0.020	2	6.1	3.4	HEADWALL
P71	18	CMP	18	0.020	2	6.1	3.4	HEADWALL
P72	18	CMP	18	0.020	2	6.1	3.4	HEADWALL
P73	18	CMP	18	0.020	2	6.1	3.4	HEADWALL
P74	18	CMP	18	0.020	2	6.1	3.4	HEADWALL
P75	18	CMP	18	0.020	2	6.1	3.4	HEADWALL
P76	18	CMP	18	0.020	2	6.1	3.4	HEADWALL
P77	18	CMP	18	0.020	2	6.1	3.4	HEADWALL
P78	18	CMP	18	0.020	2	6.1	3.4	HEADWALL
P79	18	CMP	18	0.020	2	6.1	3.4	HEADWALL
P80	18	CMP	18	0.020	2	6.1	3.4	HEADWALL
P81	18	CMP	18	0.020	2	6.1	3.4	HEADWALL

*MEAN ROCK SIZE (d50)=6 IN.

DROP INLET SCHEDULE

DROP INLET DESIGNATION	INLET TOP ELEV. (FT)	INLET BOTTOM ELEV. (FT)	INLET DIM. (FT)
A	2575.00	2574.00	2.0x2.0
B	2574.00	2573.00	2.0x2.0
C	2573.00	2572.00	2.0x2.0
D	2572.00	2571.00	2.0x2.0
E	2571.00	2570.00	2.0x2.0
F	2570.00	2569.00	2.0x2.0
G	2569.00	2568.00	2.0x2.0
H	2568.00	2567.00	2.0x2.0
I	2567.00	2566.00	2.0x2.0
J	2566.00	2565.00	2.0x2.0
K	2565.00	2564.00	2.0x2.0
L	2564.00	2563.00	2.0x2.0
M	2563.00	2562.00	2.0x2.0
N	2562.00	2561.00	2.0x2.0
O	2561.00	2560.00	2.0x2.0
P	2560.00	2559.00	2.0x2.0
Q	2559.00	2558.00	2.0x2.0
R	2558.00	2557.00	2.0x2.0
S	2557.00	2556.00	2.0x2.0
T	2556.00	2555.00	2.0x2.0
U	2555.00	2554.00	2.0x2.0

GENERAL NOTES:

1. DRAINAGE AREA REPRESENTATIVE, PONDING, PATTERNS AND DELINEATION DERIVED FROM AERIAL PHOTOGRAPHS AND SURVEYED DATA PROVIDED TO ENGINEERING DESIGNATED BY J.A. BROWN ENGINEERING-CONSULTING, INC.-A ALL DATA WERE ACTUAL AS OF DECEMBER, GRADED - DECEMBER 1, 1999.
2. ACCIDENTALLY, AREAS OF THE SITE HAVE BEEN UPDATED AND INCORPORATED PERIODICALLY AND THE EXISTING TOPOGRAPHY IS CONSIDERED PRESENTED.
3. REFERENCE FIGURE 1, "GENERAL DRAINAGE AREAS PLAN" (INCLUDED IN THE SWMP) FOR USE OF CONCEPTUALIZE PLAN PHASE IN EACH DRAINAGE AREA.
4. REFERENCE DRAWINGS, LAYOUTS, LINE DRAWING SETS FOR FINAL GRADING AND COVER

REV	BY DATE	CHK'D DATE	DESCRIPTION	PROJ ENGR DATE	PROJ MGR DATE
H	10/2 5/00		PART B PERMIT RENEWAL		
G	10/2 5/00		CELL 16		
F	10/2 1/00		CELL 15 MODIFICATIONS		
E	MB V1/00		2003 PERMIT RENEWAL		JN V1/00
D	MB V1/99		ISSUED IN RESPONSE TO NOD LETTER DATED JUNE 30, 1999		MB V1/99
C	MB V1/99		AS-BUILT, SUBMITTED WITH COA REPORT AND CONSTRUCTION CERTIFICATION		MB V1/99
B	MB V1/99		ISSUED FOR JANUARY 1999 CLASS 3 PERMIT MODIFICATION		
A	MB V1/99		ISSUED FOR PART B PERMIT RENEWAL APPLICATION		

US ecology

SITE B
GRAND VIEW, IDAHO
US EPA ID NO. IDD 073 114 654

TITLE:
FACILITY
SURFACE DRAINAGE PLAN
FINAL AT CLOSURE

DRAWN BY: MB DATE: 5/4/99 | SCALE: | FILE CODE: | DWG. NO.: PRMI-D03 | REV. NO.: H
CHECKED: DATE: | ENGINEER: DATE: | PROJ. NO.: P508
FINAL MGR. DATE: | APPROVED: DATE: | FINAL NO.:

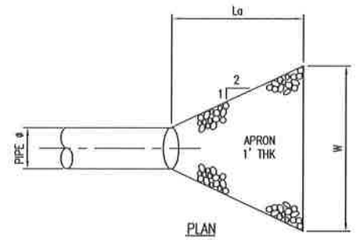

PIPE ø	La	W	d_{50}
18"	10'	11.5'	6"
24"	12'	14'	8"

TYP DIMENSIONS, EXCEPT WHERE NOTED ON PLANS

NOTE:
d IS THE STONE SIZE WHICH 50% OF THE RIP RAP MIXTURE BY WEIGHT IS LARGER THAN THAT SIZE.

CULVERT OUTLET PROTECTION
(TYPICAL FOR CULVERTS & CMP FLUMES)
SCALE: NTS

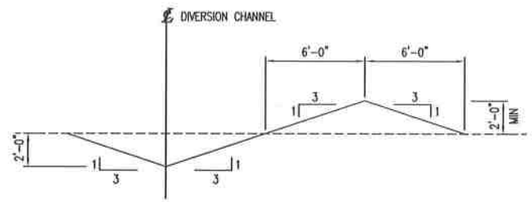

DIVERSION BERM
SCALE: 1/4"=1'-0"

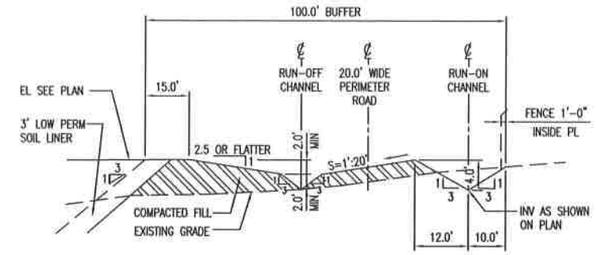

TYPICAL PERIMETER ROAD
SCALE: NTS

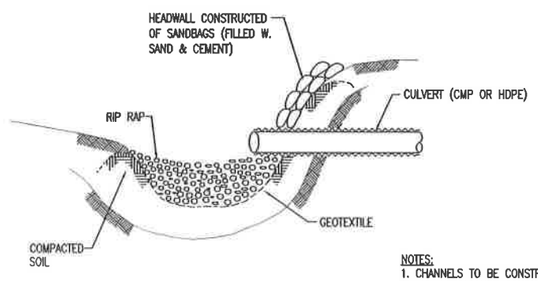

TYPICAL INLET PROTECTION
AT CULVERTS
SCALE: NTS

NOTES:
1. CHANNELS TO BE CONSTRUCTED AT LOCATIONS SHOWN ON PLANS. CHANNELS TO BE MIN 0.0033 FT/FT & MAX 0.167 FT/FT SLOPE. CHANNEL SLOPE SHOULD FOLLOW EXISTING TOPOGRAPHY WHERE POSSIBLE TO MINIMIZE CUT & FILL REQUIREMENTS.
2. CHANNEL BENDS SHALL BE RIP RAP LINED (d =4") 1' THK. LINING SHALL EXTEND MIN 10'-0" DOWNSTREAM FROM BEND.

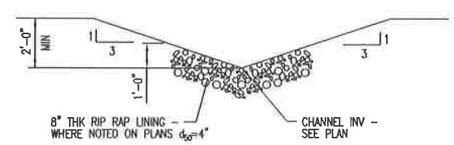

TYPICAL DIVERSION AND/OR
INTERCEPTOR CHANNEL
SCALE: 3/8"=1'-0"

REV.	BY / DATE	CHK'D / DATE	DESCRIPTION	PROJ ENGR / DATE	SUPV ENGR / DATE
B	RJM / 4/22/03	- / -	2003 PERMIT RENEWAL	- / -	JH / 4/22/03
A	MC / 7/1/98	- / -	ISSUED FOR PART B PERMIT RENEWAL APPLICATION 06/12/98	- / -	- / -

USEcology Idaho
an American Ecology company

SITE B
GRAND VIEW, IDAHO
US EPA ID NO. IDD 073 114 654

TITLE:
CIVIL
SURFACE WATER
TYPICAL DRAINAGE DETAILS

DRAWN BY: JZ	DATE 3/12/98	SCALE:	FILE CODE NIDA0050	REV. NO.
CHECKED	DATE	ENGINEER DATE	DWG. NO. PRMI-D05	B
PROJ. MGR.	DATE	APPROVED DATE	PROJ. NO. PRMI	

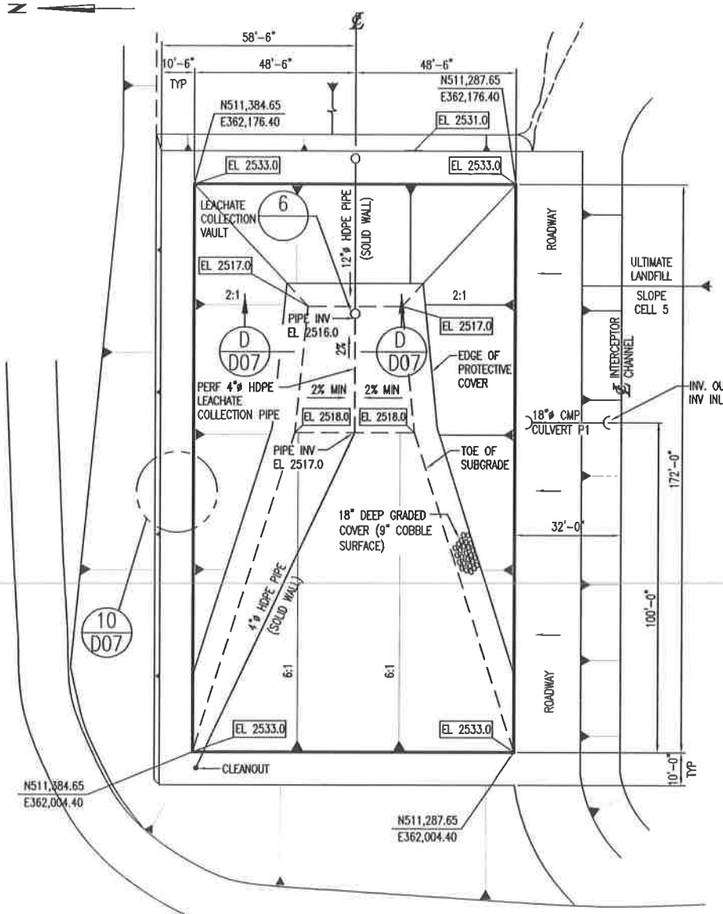

COLLECTION POND No. 1

SCALE: 1"=20'

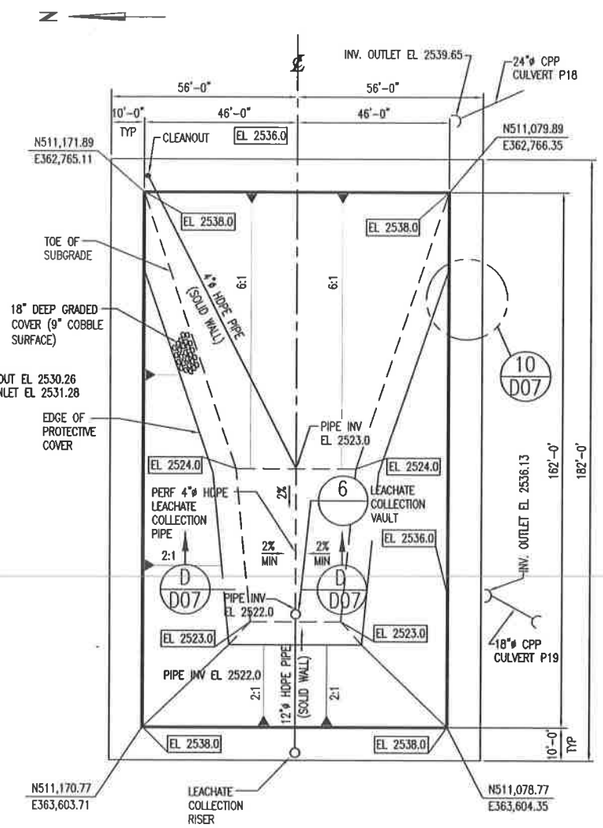

COLLECTION POND No. 2

SCALE: 1"=20'

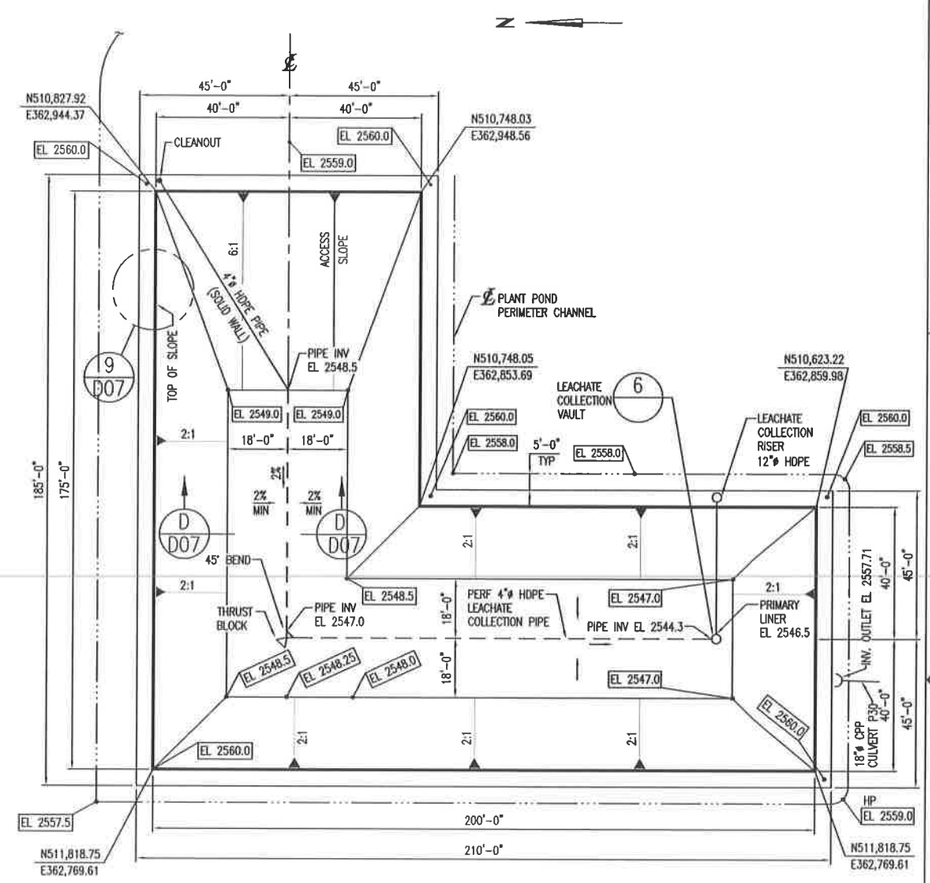

COLLECTION POND No. 3

SCALE: 1"=20'

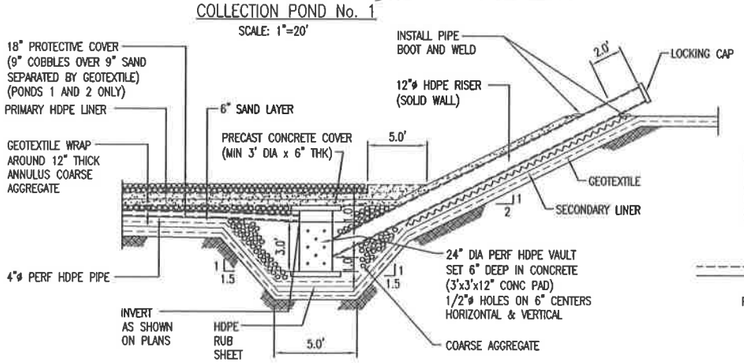

FOR COLLECTION PONDS 1, 2 & 3 AND EVAPORATION POND

TYPICAL DETAIL LEACHATE COLLECTION VAULT

DETAIL 6 / L41 / D06

SCALE: N.T.S.

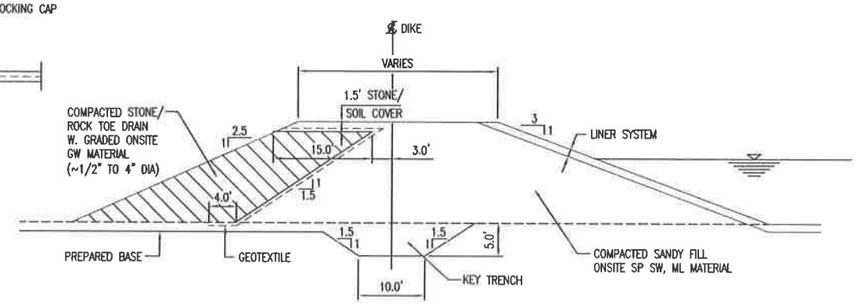

EVAPORATION POND OUTER DIKE

DETAIL 7 / L41

SCALE: N.T.S.

NOTE:
TYPICAL DETAIL FOR ALL SURFACE IMPOUNDMENT ABOVE GRADE DIKES. HEIGHT AND WIDTH VARY, SEE PLAN.

REV.	BY / DATE	CHK'D / DATE	DESCRIPTION	PROJ ENGR / DATE	SUPV ENGR / DATE
B	RJM / 1/22/03	- / -	2003 PERMIT RENEWAL	- / -	JH / 1/21/03
A	BMI / 7/28/98	- / -	ISSUED FOR PART B PERMIT RENEWAL APPLICATION	- / -	- / -

USEcology Idaho
an American Ecology company

SITE B
GRAND VIEW, IDAHO
US EPA ID NO. IDD 073 114 654

TITLE: CIVIL
COLLECTION PONDS Nos. 1, 2, & 3
PLANS, SECTIONS & DETAILS

DRAWN BY: JZ DATE 3/11/98	SCALE:	FILE CODE PRMID06B	REV. NO.
CHECKED DATE	ENGINEER DATE	DWG. NO. PRMI-D06	B
PROJ. MGR. DATE	APPROVED DATE	PROJ. NO. PRMI	

DWG. NO. PRMI-D06
PROJ. NO. PRMI

DWG. NO. PRMI-D07
PROJ. NO. PRMI

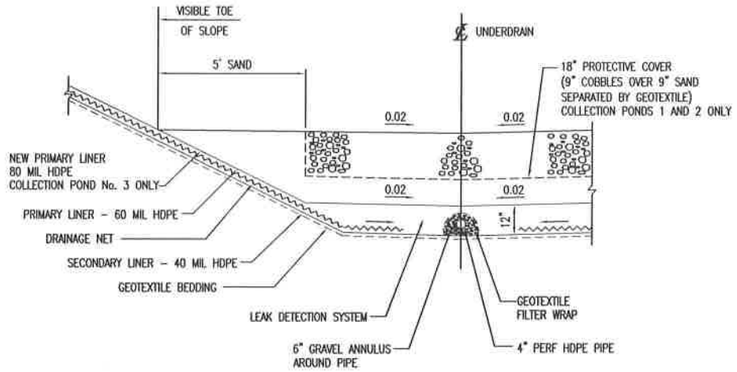

SECTION D-D / D06
SCALE: N.T.S.

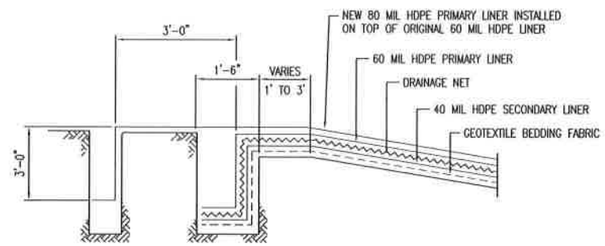

LINER ANCHOR TRENCH DETAIL
FOR COLLECTION POND No. 3

DETAIL 9 / D06
SCALE: N.T.S.

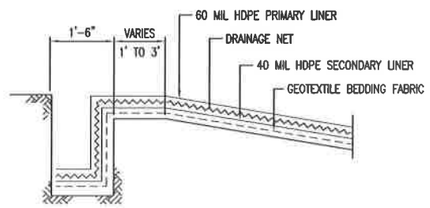

LINER ANCHOR TRENCH DETAIL
FOR POND No. 1 AND 2

DETAIL 10 / D06
SCALE: N.T.S.

REV.	BY / DATE	CHK'D / DATE	DESCRIPTION	PROJ ENGR / DATE	SUPV ENGR / DATE
C	RJM / 4/22/03	- / -	2003 PERMIT RENEWAL	- / -	JH / 4/22/03
B	MK / 1/13/99	- / -	ISSUED FOR JANUARY 1999 CLASS 3 PERMIT MODIFICATION	- / -	- / -
A	BMH / 7/28/98	- / -	ISSUED FOR PART B PERMIT RENEWAL APPLICATION	- / -	- / -

USEcology Idaho
an American Ecology company

SITE B
GRAND VIEW, IDAHO
US EPA ID NO. IDD 073 114 654

TITLE:
CIVIL
COLLECTION PONDS Nos. 1, 2 & 3
SECTIONS & DETAILS

DRAWN BY: MK	DATE 12/20/98	SCALE:	FILE CODE PRMID07C	REV. NO.
CHECKED	DATE	ENGINEER DATE	DWG. NO. PRMI-D07	C
PROJ. MGR.	DATE	APPROVED DATE	PROJ. NO. PRMI	

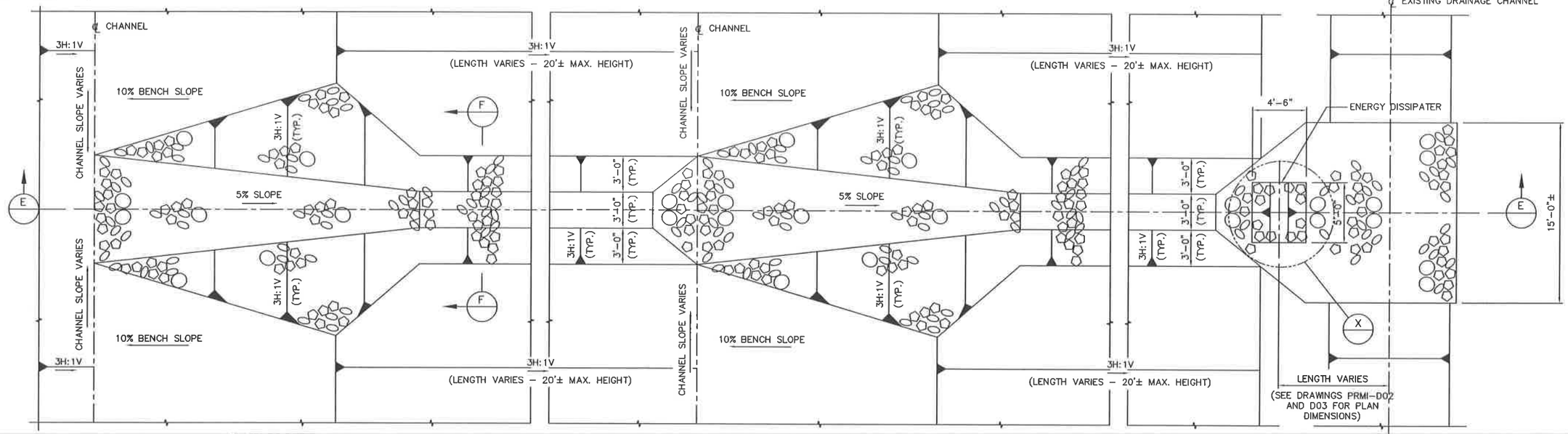

PLAN @ CAP

PLAN @ BENCH

PLAN @ BASE

PLAN–RIP RAP LINED DROP FLUME

DETAIL (11)

1/4"=1'-0"

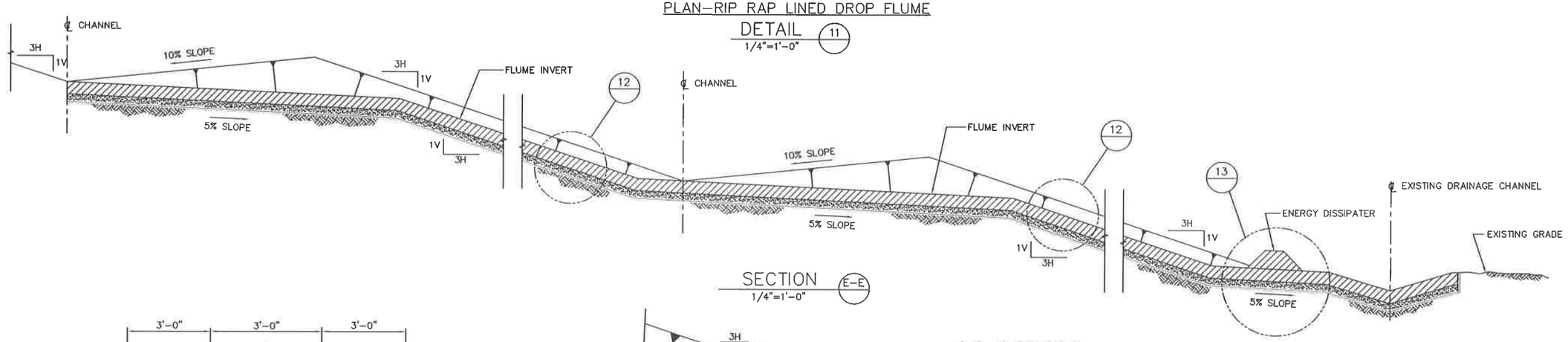

SECTION (E–E)

1/4"=1'-0"

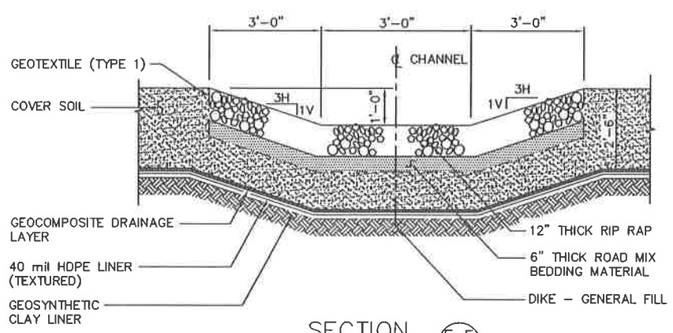

SECTION (F–F)

N.T.S.

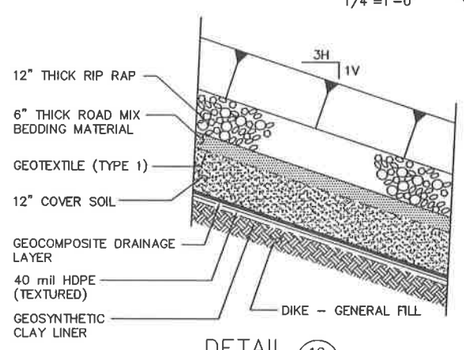

DETAIL (12)

N.T.S.

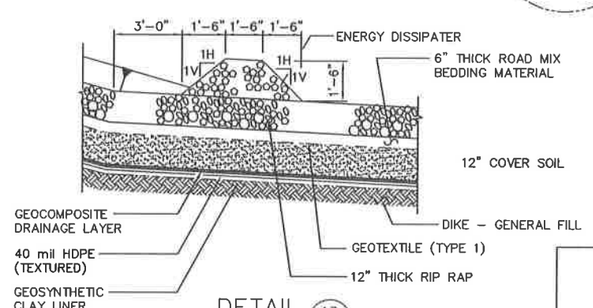

DETAIL (13)

N.T.S.

REV.	BY / DATE	CHK'D / DATE	DESCRIPTION	PROJ. ENGR / DATE	SURV. ENGR / DATE
B	RM / 4/24/03	– / –	2003 PERMIT RENEWAL	– / –	AI / 4/24/03
A	– / –	– / –	ISSUED FOR PART B PERMIT RENEWAL APPLICATION	– / –	– / –

USEcology Idaho

an American Ecology company

SITE B
GRAND VIEW, IDAHO
US EPA ID NO. IDD 073 114 654

TITLE: CIVIL
FINAL CLOSURE – CAP DRAINAGE SECTIONS AND DETAILS

DRAWN BY: MK DATE 7/06/98	SCALE:	FILE CODE PRMID03B	REV. NO.
CHECKED DATE	ENGINEER DATE	DWG. NO. PRMI-D08	B
PROJ. MGR. DATE	APPROVED DATE	PROJ. NO. PRMI	

DWG. NO. PRMI-D08
PROJ. NO. PRMI

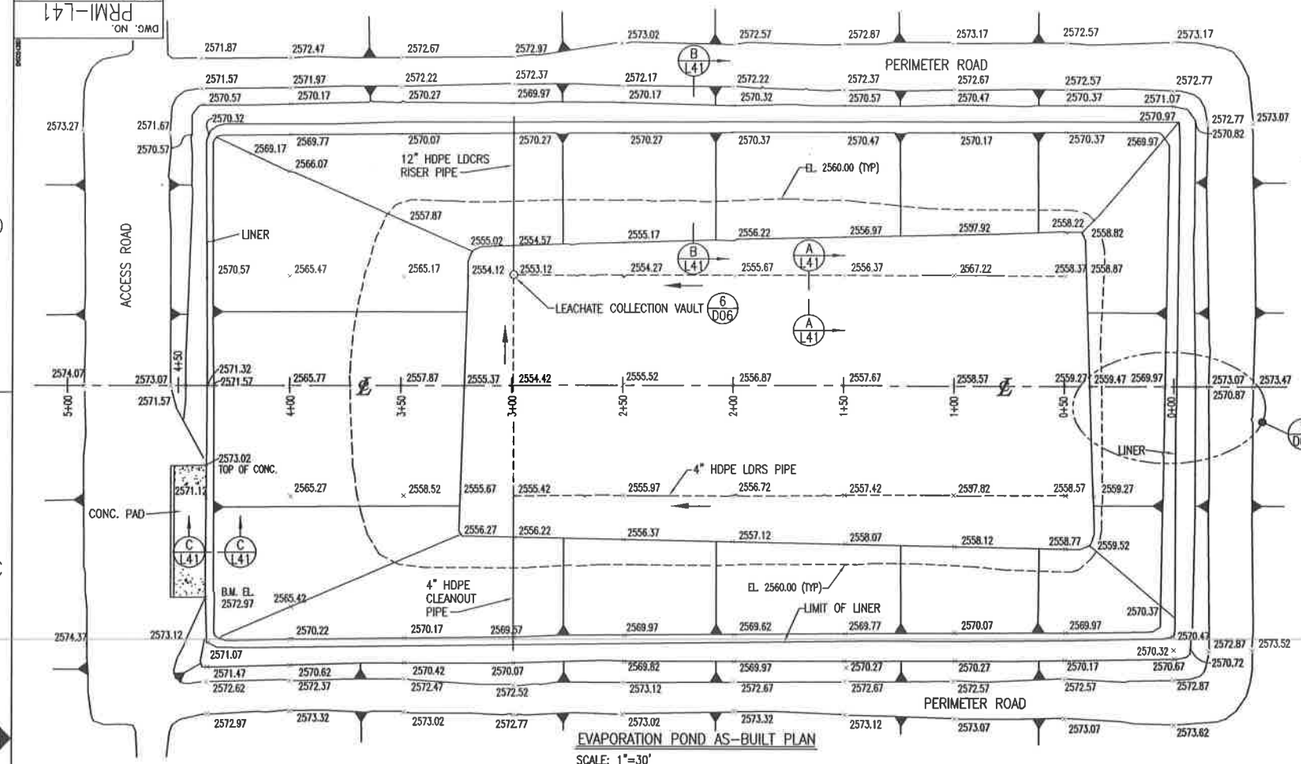

EVAPORATION POND AS-BUILT PLAN

SCALE: 1"=30'

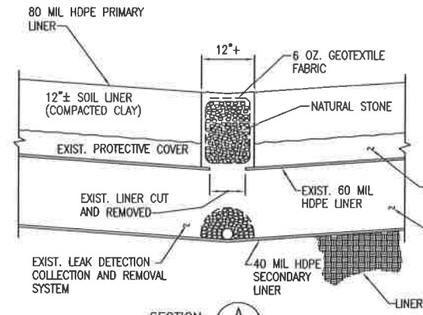

SECTION A/L41

SCALE: NTS

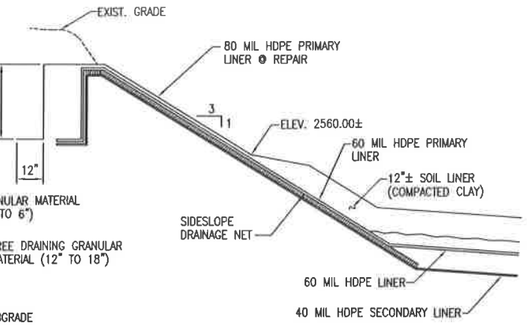

SECTION B/L41

SCALE: NTS

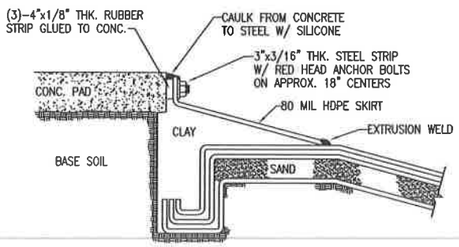

SECTION C/L41

SCALE: NTS

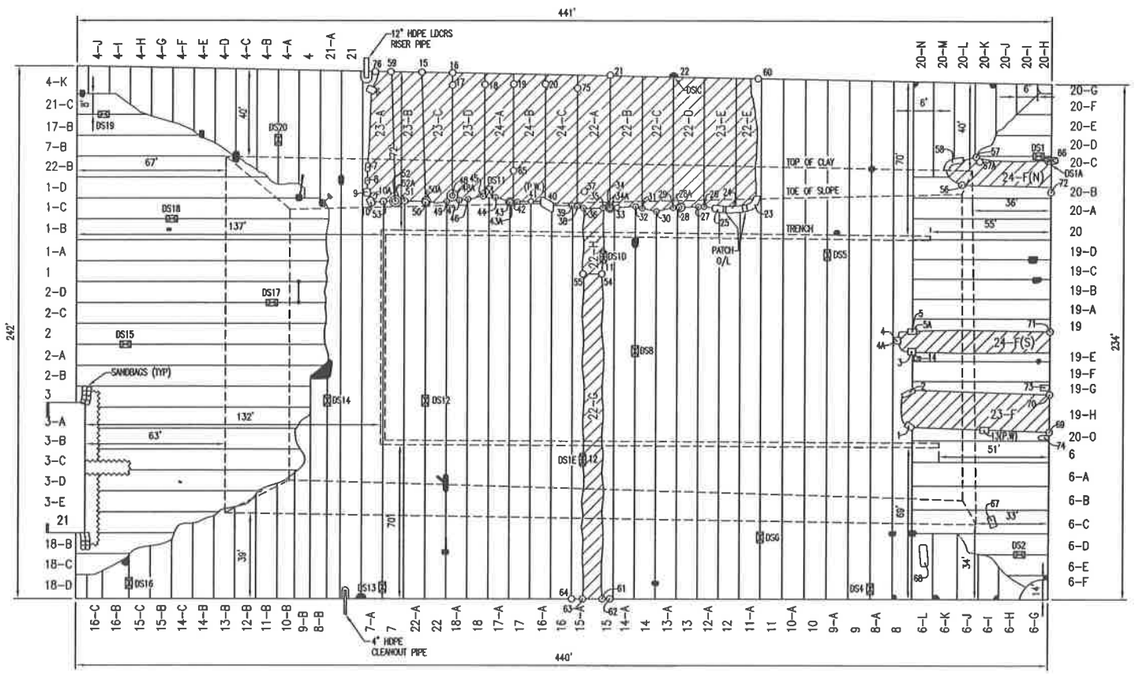

EVAPORATION POND HDPE LINER PANEL PLAN

SCALE: 1"=30'

NOTES:

1. ALL THREE-WAY SEAM INTERSECTIONS ARE EXTRUSION WELDED.
2. ALL PANELS ARE 9 1/2 FT. WIDE UNLESS OTHERWISE NOTED.
3. PANELS 16-B,10-B, 9-B, 8-B, 21-A, 21-C, 18-D, 4-I, AND 20-N ARE NOT TO SCALE. PANEL 6-F IS 2 FT. WIDE. PANEL 21 IS 245' LONG. PANEL 8 IS 240' LONG.

LEGEND

- HOT WEDGE SEAM
- EXTRUSION SEAM
- DESTRUCTIVE SAMPLE
- PATCH W/O NUMBER (OLD)
- 73 PATCH W/ NUMBER (NEW)
- 2569.97 SPOT ELEVATION (TYP)
- SPOT ELEVATION (TYP)
- 22-6 REPAIRED DAMAGED AREA AS-BUILT

REV.	BY / DATE	CHK'D / DATE	DESCRIPTION	PROJ. ENGR. / DATE	SUPV. ENGR. / DATE
B	BJH / 4/14/03	- / -	2003 PERMIT RENEWAL	- / -	JH / 4/14/03
A	BJH / 7/29/98	- / -	ISSUED FOR PART B PERMIT RENEWAL APPLICATION	- / -	- / -

USEcology Idaho
an American Ecology company

SITE B
GRAND VIEW, IDAHO
US EPA ID NO. IDD 073 114 654

TITLE: CIVIL
EVAPORATION POND
TYPICAL PLANS, SECTIONS AND DETAILS

DRAWN BY: MK	DATE	SCALE:	FILE CODE PRMIL41B	REV. NO.
CHECKED	DATE	ENGINEER / DATE	DWG. NO. PRMI-L41	B
PROJ. MGR.	DATE	APPROVED / DATE	PROJ. NO. PRMI	

DWG. NO. PRMI-L41
PROJ. NO. PRMI

52-01-09

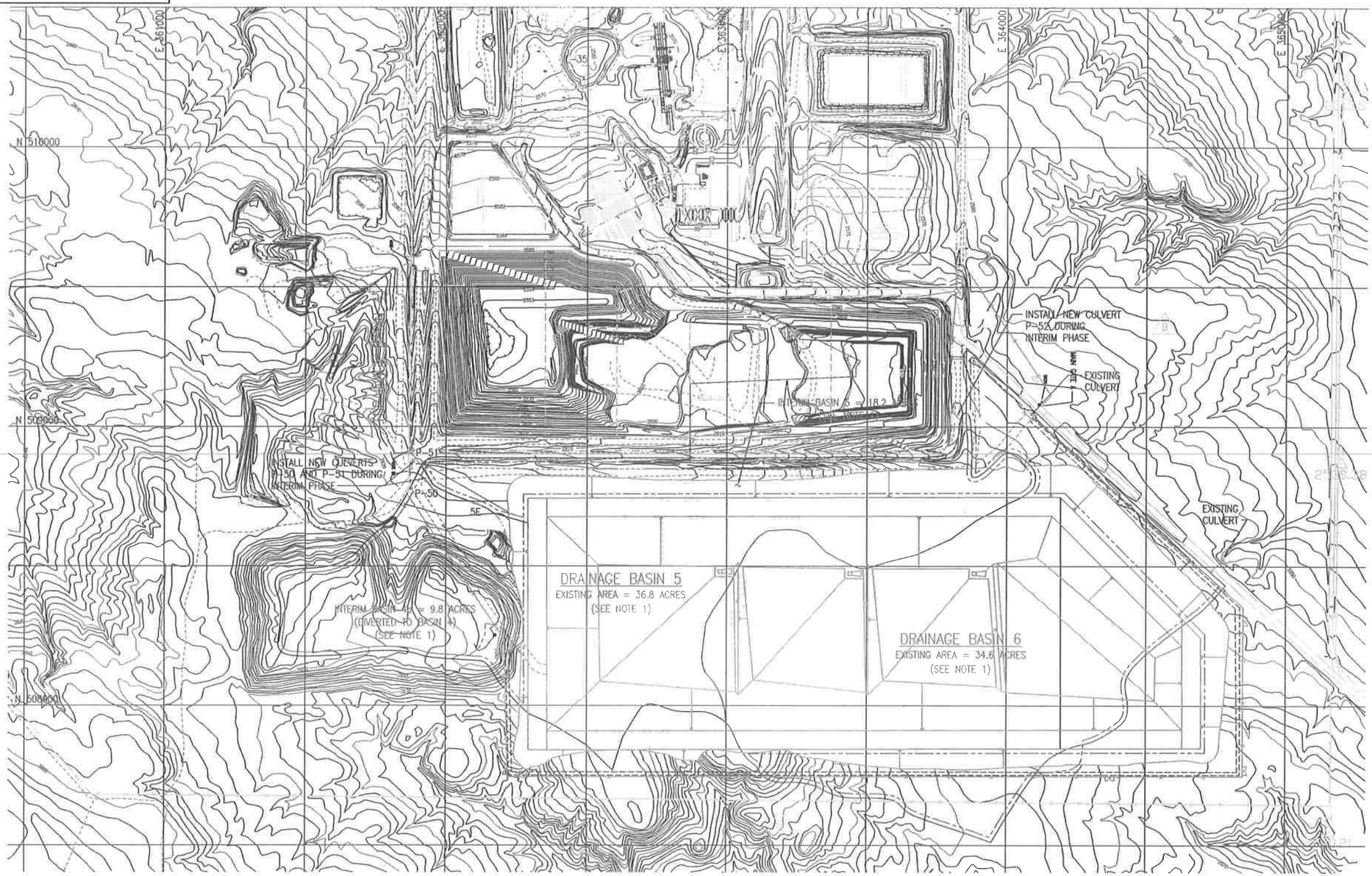

LEGEND

- EXISTING DRAINAGE BASIN LIMIT
- INTERIM DRAINAGE BASIN LIMIT
- DRAINAGE CHANNEL (INTERIM PHASE)
- CELL 15 CONTAINED DRAINAGE (MAXIMUM AREA – INTERIM PHASE)

N

WASTE FLOW

1" = 100'

REV	DATE	DESCRIPTION	PE	DEPT MGR
C	9/08	CELL 15 MODIFICATIONS	VJT	

NOTES

1. DRAINAGE BASINS ARE USED FOR CALCULATING STORM WATER RUNOFF TO SURROUNDING DRAINAGES. EXISTING AREA IS STORM WATER CONTRIBUTION PRIOR TO CONSTRUCTION. INTERIM AREA IS STORM WATER CONTRIBUTION DURING CONSTRUCTION AND OPERATIONS PRIOR TO COVER PLACEMENT. DURING OPERATIONS, STORM WATER FALLING WITHIN CELL 15 FOOTPRINT WILL BE CONTAINED AND TREATED.

REFERENCE DRAWINGS

DRAWING NO.	DRAWING TITLE

CULVERT SCHEDULE

DESIG-NATION	DIA (IN)	MATERIAL	LENGTH (FT)	MANNING'S N VALUE	INV EL INLET	INV EL OUTLET	TOP EM-BANKMENT	SLOPE	DESIGN FLOW* (CFS)	OUTLET VEL (FPS)	OUTLET PROTECTION
P50	18	CMP	50	.025	2612.00	2611.50	2616	.010	2	3.6	NONE
P51	18	CMP	50	.025	2611.10	2610.60	2616	.010	2	3.6	NONE
P52	18	CMP	50	.025	**	**	2570	.010	<1 ***	2.8	NONE

* PEAK FLOW BASED ON 25-YR, 24-HR DESIGN STORM.

** INVERT ELEVATIONS TO MATCH EXISTING CHANNEL INVERTS, CULVERT TO HAVE A MINIMUM SLOPE OF 0.010.

*** A MINIMUM OF ONE CFS WAS USED FOR DESIGN OF CHANNELS COLLECTING FLOW FROM SMALL BASINS.

TABLE 4 BASIN DISCHARGES

	BASIN ID	AREA (ACRES)	Tc (HRS)	25-YR DISCHARGE (CFS)
EXISTING	5	36.8	0.85	3
	6	34.6	0.75	3
INTERIM	5	18.2	0.26	2
	6	15.0	0.51	2

STORM DISCHARGES WERE BASED ON A CN, CURVE NUMBER, VALUE OF 73.

Tc, TIME OF CONCENTRATION, WAS COMPUTED USING THE METHOD OUTLINED IN SOIL CONSERVATION SERVICE TR-55 MANUAL.

CHANNEL SCHEDULE

CHANNEL DESIG--NATION	PEAK FLOW* (CFS)	DESIGN VELOCITY (FPS)	SLOPE	DEPTH (FT)	FLOW DEPTH (FT)	SIDE--SLOPE (H:V)	LINING TYPE	LINING THICKNESS	LINING D50 (IN)	MANNING'S N VALUE
5E	2	3.9	.033	2	.4	3:1	EARTH	NA	NA	.023
5F	<1**	3.3	.033	2	.3	3:1	EARTH	NA	NA	.023
5G	<1	3.8	.049	2	.3	3:1	EARTH	NA	NA	.023
5H	<1	4.1	.057	2	.3	3:1	EARTH	NA	NA	.023
6A	1	3.5	.039	2	.3	3:1	EARTH	NA	NA	.023
6B	2	4.2	.039	2	.4	3:1	EARTH	NA	NA	.023
6C	<1	3.5	.039	2	.4	3:1	EARTH	NA	NA	.023

* PEAK FLOW BASED ON 25-YR, 24-HR DESIGN STORM.

** A MINIMUM OF ONE CFS WAS USED FOR DESIGN OF CHANNELS COLLECTING FLOW FROM SMALL BASINS.

US Ecology Idaho

an American Ecology company

GRAND VIEW FACILITY
LANDFILL CELL 15

SITE DRAINAGE
EXISTING CONDITIONS
AND INTERIM PHASE

Washington

DRAWN BY	CHECKED BY	WORK ORDER NUMBER	
L. HAYS		25124	
DESIGNED BY	ENG MGR APPR	DRAWING NUMBER	REV
J. BESSAW		52-01-09	C