WATER QUALITY MONITORING PROTOCOLS - REPORT NO. 7

PROTOCOLS FOR CONDUCTING USE ATTAINABILITY ASSESSMENTS FOR DETERMINING BENEFICIAL USES TO BE DESIGNATED ON IDAHO STREAM SEGMENTS

Idaho Department of Health and Welfare

Division of Environmental Quality

1991

PROTOCOLS FOR CONDUCTING USE ATTAINABILITY ASSESSMENTS FOR DETERMINING BENEFICIAL USES TO BE DESIGNATED ON IDAHO STREAM SEGMENTS

Prepared by
Terry R. Maret
and
Dave Jensen

Idaho Department of Health and Welfare
Division of Environmental Quality
1410 N. Hilton
Boise, ID 83720-9000

ACKNOWLEDGEMENTS

This protocol was reviewed by numerous individuals from a number of agencies who provided valuable comments during its development. We would like to thank Gwen Burr, Tim Burton, Bill Clark, Michael Collette, Ervin Cowley, Jane Frazier, John Heimer, Michael Ingham, Will Reid, and Marcia Schmelzer for their critical reviews.

TABLE OF CONTENTS

Acknowledgements i

Table of Contents ii

List of Figures iii

List of Tables iv

Introduction 1

Methodology 6

- Recreation 6
  - Water-Based Recreation Value 6
  - Normal Summer Flows 9
  - Normal Summer Flows or Average Width and Depth . 9
  - Aesthetics 9
  - Dominant Substrate 9
  - Preliminary Use Classification 11
  - Existing Use 11
  - Natural or Human-Caused Pollution 11
  - Widespread Economic and Social Impact 11
  - Final Use Classification 12
- Aquatic Life 12
  - Cold Water Habitat 12
  - Salmonid Spawning 12
  - Habitat and Species Value Class 15
  - Species Significance 17
  - Habitat Quality 20
  - Preliminary Use Classification 28
  - Existing Use 29
  - Natural or Human-Caused Pollution 29
  - Widespread Economic and Social Impact 29
  - Final Use Classification 29
- Water Supply 29
- Wildlife Habitat 29
- Aesthetics and Human Health 30
- Special Resource Waters 30
- Outstanding Resource Waters 30
- References 32
- Appendix A 33

LIST OF FIGURES

Figure 1-Decision Tree, EPA Regulations 4

Figure 2-Decision Tree, Recreational Use Classification 7

Figure 3-Aesthetic Quality Assessment Matrix 10

Figure 4-Decision Tree, Aquatic Life Use Classification 13

Figure 5-Qualitative Habitat Assessment Index 21

LIST OF TABLES

Table 1. Relative Significance of Species 16

Table 2. Species Identified to be of High Significance 18

Table 3. Species Identified to be of Intermediate Significance . 19

INTRODUCTION

Water quality standards are the cornerstone of water quality management in the State. They define and designate beneficial uses for the State's waters and specify water quality criteria necessary to protect those uses. The designated uses and associated water quality criteria serve to define the water quality management goals for a water body. The attainment of water quality to support designated beneficial uses is a primary objective of water quality management actions. It is therefore imperative that the beneficial uses assigned to a water body accurately reflect uses that are attainable. Use attainability assessments are used to identify or confirm that the proper beneficial uses, and therefore water quality goals, are assigned to a water body. Use attainability assessments are of key importance on water bodies where water quality management actions (e.g., NPDES permits, wastewater facility loan decisions, BMP controls, etc.,) are being contemplated and beneficial uses are undefined or, if designated, their appropriateness is questionable. Much of this protocol was developed using EPA's technical support manual (U.S. EPA 1983).

Use attainability assessments consist of a structured scientific evaluation of the factors affecting beneficial use attainment. EPA water quality standards regulations (40 CFR 131.3(g)) define a use attainability analysis as a structured scientific assessment of the factors affecting the attainment of the use which may include physical, chemical, biological, and economic factors as described in 40 CFR 130.10(g). EPA regulations at 40 CFR 130.10(g) state:

> "States may remove a designated use[1] which is *not* an existing use[2] or establish subcategories of a use if the State can demonstrate that attaining the designated use is not feasible because:
>
> (1) Naturally occurring pollutant concentrations prevent the attainment of the use; or
>
> (2) Natural, ephemeral, intermittent or low flow conditions or water levels prevent the attainment of the use, unless these conditions may be compensated for by the discharge of sufficient volume of effluent discharges without violating State water conservation requirements to enable uses to be met; or

---

[1]*Designated uses* are those uses specified in water quality standards for each water body or segment whether or not they are being attained.

[2]*Existing uses* are those uses actually attained in the water body on or after November 28, 1975, whether or not they are included in the water quality standards.

(3) Human-caused conditions or sources of pollution prevent the attainment of the use and cannot be remedied or would cause more environmental damage to correct than to leave in place; or

(4) Dams, diversions, or other types of hydrologic modifications preclude the attainment of the use, and it is not feasible to restore the water body to its original condition or to operate such modification in a way that would result in the attainment of the use; or

(5) Physical conditions related to the natural features of the water body, such as the lack of a proper substrate, cover, flow, depth, pools, riffles, and the like, unrelated to water quality, preclude attainment of aquatic life protection uses; or

(6) Controls more stringent than those required by Sections 301(b)[3] and 306[4] of the Act would result in substantial and widespread economic and social impact."

EPA regulations regarding use attainability studies further state in 40 CFR 130.10 (h) and (j) that:

"States may not remove designated uses if:

(1) They are existing uses unless a use requiring more stringent criteria is added; or

(2) Such uses will be attained by implementing effluent limits required under Sections 301(b) and 306 of the Act and by implementing cost-effective and reasonable best management practices for nonpoint source control."

and

"A State must conduct a use attainability analysis ... whenever:

(1) The State designates or has designated uses that do not include the uses specified in Section 101(a)(2)[5] of the Act, or

(2) The State wishes to remove a designated use that is specified in Section 101(a)(2) of the Act or to adopt subcategories of

---

[3]Section 301(b) refers to Effluent Limitations.

[4]Section 306 refers to National Standards of Performance.

[5]Section 101(a)(2) states: "it is the national goal that wherever attainable, an interim goal of water quality which provides for the protection and propagation of fish, shellfish, and wildlife and provides for recreation in and on the water be achieved by July 1, 1983.

uses specified in Section 101(a)(2) of the Act which require less stringent criteria."

EPA regulations regarding use attainability assessments are summarized in the decision tree shown in Figure 1.

Figure 1. Decision tree for applying EPA regulations governing use attainability assessments.

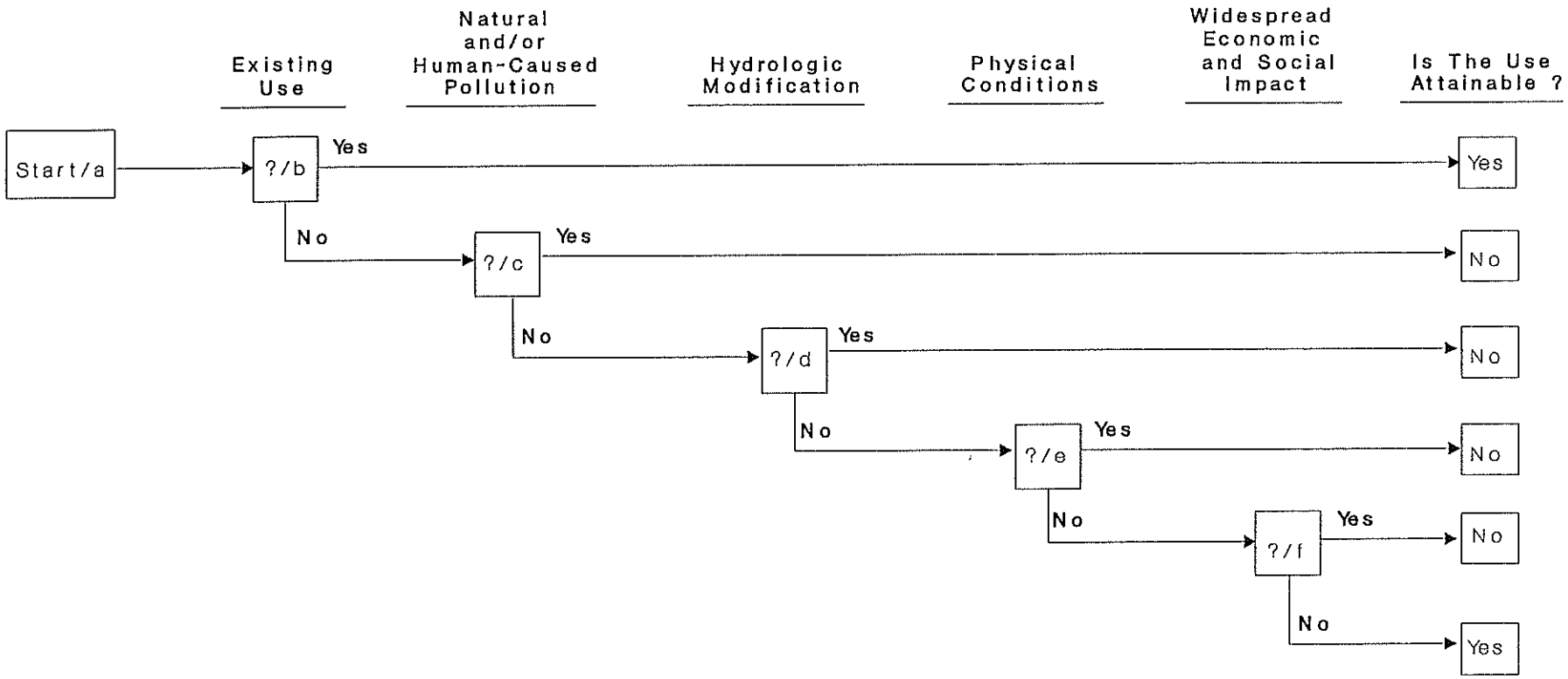

/a A designated use on a water body is questionable as to whether or not it is an attainable use or beneficial uses are undefined ?

/b Is use in question an existing use ?

/c Do natural or human-caused pollutant concentrations, which would cause more environmental damage to correct than leave in place, prevent attainment of the use in question ?

/d Is the use precluded by hydrologic modifications to the water body that are not feasible to correct or can't be operated in a way that would result in the attainment of the use ?

/e Do physical conditions related to the natural features of the water body preclude attainment of aquatic life protection uses ?

/f Does attainment of the use necessitate controls more stringent than those required by Sections 301(b) and 306 of the CWA, and would the controls result in substantial and widespread economic and social impact ?

Idaho Department of Health and Welfare (1990) Water Quality Standards defines the beneficial uses for which surface water quality is to be protected for in Idaho. They also classify State waters according to which of these beneficial uses are appropriate for protection on individual water bodies. Beneficial uses or designations assigned by IDHW and currently defined in the Water Quality Standards for surface water quality protection include:

Beneficial Uses:

- Agricultural Water Supplies
- Domestic Water Supplies
- Cold Water Biota
- Warm Water Biota
- Salmonid Spawning
- Primary Contact Recreation
- Secondary Contact Recreation
- Industrial Water Supplies
- Wildlife Habitats
- Aesthetics

Other Designated Uses:

- Outstanding Resource Waters
- Special Resource Waters

Three additional use classes are currently being proposed in the triennial revisions of the Water Quality Standards, these include:

- Limited Cold Water
- Limited Warm Water
- Human Health

METHODOLOGY

To facilitate use attainability assessments, designated beneficial uses for the State are categorized as follows:

1) **Recreation**
   a) Primary Contact Recreation
   b) Secondary Contact Recreation

2) **Aquatic Life**
   a) Cold Water Biota
   b) Warm Water Biota
   c) Salmonid Spawning
   d) Limited Cold Water Habitat (new use classification)
   e) Limited Warm Water Habitat (new use classification)

3) **Water Supply**
   a) Domestic
   b) Agricultural
   c) Industrial

4) **Wildlife Habitat**

5) **Aesthetics/Human Health** (new use classification)

6) **Special Resource Waters**

7) **Outstanding Resource Waters**

Assumptions and criteria to assess use attainability and classify streams for appropriate beneficial uses are defined for each of the above seven categories. The defined criteria include both quantitative measures and qualitative guidelines, and are meant to be applied to a homogeneous stream segment.

RECREATION

The attainability and appropriate classification of a stream segment for recreational use is determined according to the decision tree shown in Figure 2. The following provides a brief discussion of the decision options for assessing the attainability of recreational uses.

Water-Based Recreation Value

The findings of the "Pacific Northwest Rivers Study" (PNRS) are used to initially evaluate the water-based recreation value of the stream segment (Allen et al. 1986). Appendix A provides resource value classes for fisheries, wildlife, and recreation to be used in the assessment matrices. The PNRS assessed 1,564 stream segments for water-based recreation and assigned one of five value classes to each segment to denote its recreation value:

Figure 2. Decision tree for determining recreational use classification of a stream segment based on use attainability.

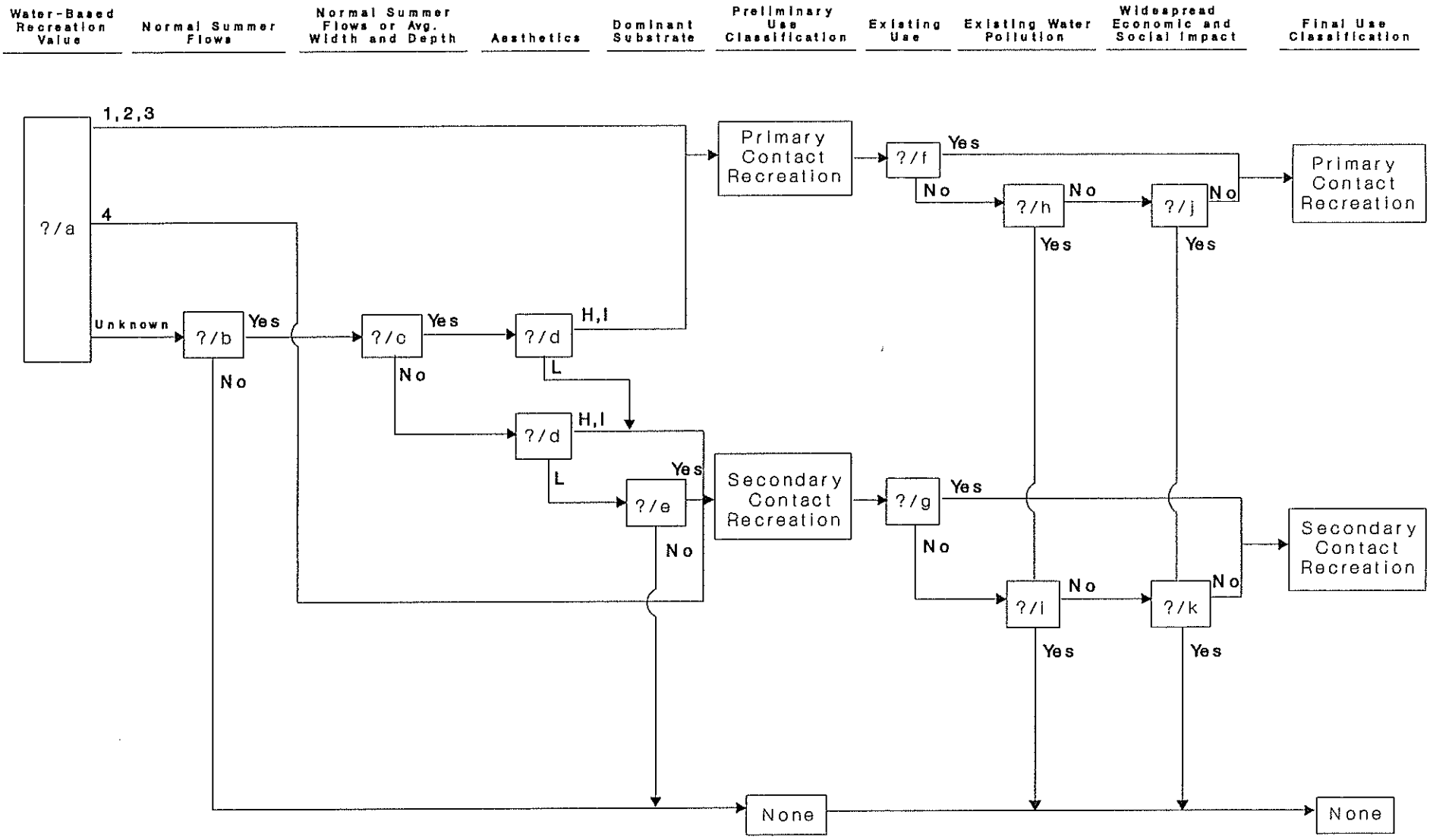

/a What is the water-based recreation value class as defined in the "Pacific Northwest Rivers Study"? (If primary contact recreation is an existing use, the 1,2,3 decision option should be selected regardless of the defined recreation value class.)

/b Are normal summer low flow $\geq$ 1 cfs? (If secondary contact recreation is an existing use, the "yes" decision option should be selected regardless of the normal summer flow.)

/c Are normal summer flows $\geq$ 5 cfs or is the average stream width $\geq$ 25 feet and average depth $\geq$ 1 foot?

/d Is the aesthetic quality rating of the stream segment high, intermediate, or low?

/e Is the dominant substrate of the stream segment $\geq$ sand? (If secondary contact recreation is an existing use, the "Yes" decision option should be selected regardless of the dominant substrate.)

/f Is primary contact recreation an existing use?

/g Is secondary contact recreation an existing use?

/h Does natural or human-caused pollution, which would cause more environmental damage to correct than leave in place, preclude primary contact recreation as a use?

/i Does natural or human-caused pollution, which would cause more environmental damage to correct than leave in place, preclude secondary contact recreation as a use?

/j Are controls more stringent than those required by Sections 301(b) and 306 of the CWA necessary to support a primary contact recreation use and would these controls result in substantial and widespread economic and social impact?

/k Are controls more stringent than those required by Sections 301(b) and 306 of the CWA necessary to support a secondary contact recreation use and would these controls result in substantial and widespread economic and social impact?

Value Class	
1	Outstanding recreational resource
2	Substantial recreational resource
3	Moderate recreational resource
4	Limited recreational resource
U	Unclassified or unknown recreational resource

Based on the PNRS water-based recreation value, one of the three decision options are selected (Allen et al. 1986). If the goal of the use attainability assessment is to "field" verify an existing use designation which may be based on the PNRS water-based recreation value, the unknown decision option should be selected.

Normal Summer Flows

If mean daily flows during the period May 1 through September 30 are normally less than 1 cfs, then a primary or secondary contact recreational use is deemed unattainable.

Normal Summer Flows or Average Width and Depth

The "yes" decision option is selected for the stream segment if mean daily flows during the period May 1 through September 30 are normally greater than 5 cfs or the average stream width is greater than 25 feet and the average water depth is greater than 1 foot.

Aesthetics

A major factor which determines how much a stream will be used for recreation is its scenic beauty or aesthetic quality. The aesthetic quality of the stream segment is evaluated and rated according to aesthetic quality assessment matrix shown in Figure 3. Aesthetic quality for a stream segment is rated as high (33-45), intermediate (18-32), or low (5-17) based on the sum (total score) of the completed aesthetic quality assessment matrix. The appropriate decision option is selected based on the stream segment aesthetic quality rating.

Dominant Substrate

The substrate composition of the stream segment is estimated from visual observation. If the substrate is dominated (>50%) by sand or larger material (>0.06 mm particle size), the "yes" decision option is selected. If silt or clay (<0.06 mm particle size) is a major component (>50%) of the substrate, the "no" decision option is selected.

Figure 3. Aesthetic quality assessment matrix.

PARAMETER	CATEGORY		
	HIGH (7-9)	INTERMEDIATE (4-6)	LOW (1-3)
Channel Morphology Score:_____	Little or no channelization present. High stream sinuosity.	Some channelization present. Moderate stream sinuosity.	Channelization extensive. Low stream sinuosity.
Water Clarity (May 1 - Sept. 30) Score:_____	Secchi depth > 1 meter or turbidity < 25 NTU.	Secchi depth 0.5 to 1 meter or turbidity 25 to 50 NTU.	Secchi depth < 0.5 meter or turbidity > 50 NTU.
Streambank Stability Score:_____	Stable. Little evidence of erosion or bank failure. Over 80% of the streambank surfaces covered by vegetation or boulders and cobble.	Moderately stable. Infrequent, small areas of erosion mostly healed over. 50-79% of the streambank covered by vegetation, gravel or larger material.	Unstable. Moderate to many eroded areas. less than 50% of the streambank surfaces covered by vegetation, gravel or larger material.
Riparian Conditions Score:_____	Extensive "buffer zone" of diverse vegetation. Relatively unimpacted by "human" activities.	Moderate "buffer zone" of diverse vegetation. Moderately impacted by "human" activities.	Minimal "buffer zone" of diverse vegetation. Extensively impacted by "human" activities.
Surrounding Land Form; "Scenic Grandeur" Score:_____	Predominantly forested or alpine; or high relief (canyon) area. Highly scenic.	Slightly to moderately forested or moderate relief. Moderately scenic.	Intensive agriculture or urban development. Not scenic to slightly scenic.

Total Score:_____

High 33-45
Intermediate 18-32
Low 5-17

Preliminary Use Classification

The preliminary use classification represents the beneficial use attainable on the stream segment before allowances are made for natural and irretrievable, man-induced water pollution and economic and social consequences of use designation.

Existing Use

If the stream segment supported the beneficial use in question at any time on or after November 28, 1975 it is deemed an existing use and the "yes" decision option is selected. In accordance with the Clean Water Act, existing uses are deemed attainable uses that may not be "downgraded" for any reason (e.g., economic or social considerations, etc.).

Evaluation of the existing primary contact recreation use of a stream segment is based on the actual primary contact recreational use that has occurred on the stream segment. An existing primary contact recreational use is deemed present if the stream segment in question receives significant usage (more than 100 person-visits per year) in any of the following recreational activities:

- Swimming
- Water Skiing
- Skin Diving
- Rafting
- Canoeing
- Kayaking
- Tubing

Natural or Human-Caused Pollution

If naturally occurring pollutant concentrations prevent the attainment of the use in question, the "yes" decision option is selected. The "yes" decision option is also selected if human-caused conditions or sources of pollution that can not be remedied, or would cause more environmental damage to correct than to leave in place, prevent the attainment of the use in question. Where "background" pollution limits beneficial use attainment, site-specific criteria should be established to protect "existing" water quality. Such stream segments should be evaluated as part of each triennial water quality standards revision to determine if "background" water quality has improved to the extent that appropriate beneficial uses can be supported.

Widespread Economic and Social Impact

The "yes" decision option is selected if supporting the use in question would require controls more stringent than those required by Sections 301(b) and 306 of the Clean Water Act, and the controls

would result in substantial and widespread economic and social impact.

Final Use Classification

The final use classification is the use designation assigned in the water quality standards.

AQUATIC LIFE

The assessment mechanism for determining use attainability and classification of a stream segment for aquatic life uses is depicted in the decision tree shown in Figure 4. The following provides a brief discussion of the decision options for assessing the attainability of aquatic life uses.

Cold Water Habitat

The cold water habitat potential of the stream segment is initially assessed based on its water temperature and/or the aquatic organisms present. If water temperatures seldom exceed 20° C or there is a significant occurrence of a cold-water indicator organism, the "yes" decision option should be selected; the stream segment is considered a cold water habitat. If water temperatures commonly exceed 20° C and cold-water indicator organisms are absent, the "no" decision option should be selected; the stream segment is considered a warm water habitat. If, by definition, salmonid spawning or cold water biota are an existing use, the "yes" decision option should be selected regardless of existing habitat conditions.

Salmonid Spawning

The ability of a stream segment to support salmonid spawning is evaluated based on existing or historical salmonid populations or existing physical habitat. If the stream segment supports a viable population of salmonids with juveniles present, salmonid spawning is considered to be occurring and the "yes" decision option should be selected. If historical records document the occurrence of successful salmonid reproduction on or after November 28, 1975, the "yes" decision option should be selected. If the physical habitat (e.g., substrate, flow, cover, etc.) of the stream segment, excluding human-caused pollution, is supportive of salmonid reproduction, the stream segment is considered supportive of salmonid spawning and the "yes" decision option should be selected. Idaho Fish and Game has develop habitat preference criteria for salmonid spawning which can be used as guidance for a particular species (Cochnauer and Elms 1986).

Figure 4. Decision tree for determining aquatic life use classification of a stream segment based on use attainability.

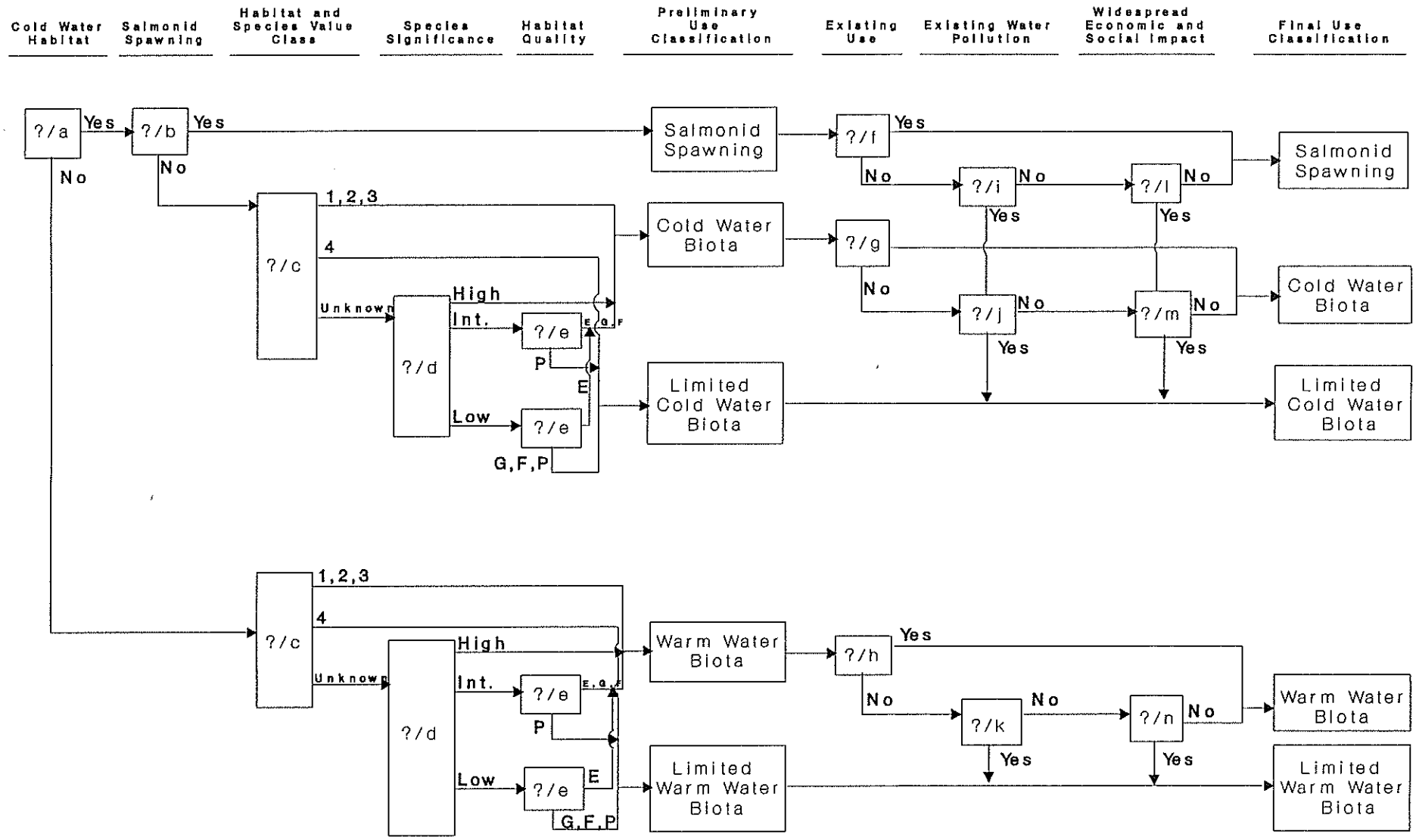

/a Do water temperatures seldom exceed 20° C or is there a significant occurrence of cold water species? (If salmonid spawning or cold water biota is an existing use, the "yes" decision option should be selected regardless of the existing cold water habitat.)

/b Is the existing habitat (excluding human-caused pollution) capable of supporting salmonid spawning or is salmonid spawning an existing use?

/c What is the habitat and species value class as defined in the Pacific Northwest Rivers Study? (If, as appropriate, cold or warm water biota is an existing use, the 1,2,3 decision option should be selected regardless of the defined habitat and species value class.)

/d What is the significance (High, Intermediate or Low) of the species present?

/e What is the rating (Excellent, Good, Fair or Poor) of the existing aquatic habitat?

/f Is salmonid spawning an existing use?

/g Is cold water biota an existing use?

/h Is warm water biota an existing use?

/i Does natural or human-caused pollution, which would cause more environmental damage to correct than leave in place, preclude salmonid spawning as a use?

/j Does natural or human-caused pollution, which would cause more environmental damage to correct than leave in place, preclude cold water biota as a use?

/k Does natural or human-caused pollution, which would cause more environmental damage to correct than leave in place, preclude warm water biota as a use?

/l Are controls more stringent than those required by Sections 301(b) and 306 of the CWA necessary to support a salmonid spawning use and would these controls result in substantial and widespread economic and social impact?

/m Are controls more stringent than those required by Sections 301(b) and 306 of the CWA necessary to support a cold water biota use and would these controls result in substantial and widespread economic and social impact?

/n Are controls more stringent than those required by Sections 301(b) and 306 of the CWA necessary to support a warm water biota use and would these controls result in substantial and widespread economic and social impact?

Habitat and Species Value Class

The findings of the "Pacific Northwest Rivers Study" (PNRS) are used to initially evaluate the habitat quality and significance of the fish species present (Allen et al. 1986). The PNRS assessed 1,564 stream segments for habitat and fish species and assigned one of five value classes to each segment to denote its value for resident fish:

Value Class	
1	Outstanding resident fish resource
2	Substantial resident fish resource
3	Moderate resident fish resource
4	Limited resident fish resource
U	Unclassified or unknown resident fish resource

The "habitat and species" value assigned by the PNRS was based on habitat quality and the relative significance of resident fish species present in the stream segment (Table 1). A preliminary value class was assigned to a given stream segment for each species present. For example, if cutthroat trout in segment "X" were identified as a species of high concern, and segment "X" contained intermediate quality cutthroat trout habitat, a value class of 2 was assigned to the segment. The same procedure was repeated for all resident fish species present in segment "X"; the highest value class obtained was taken as the "habitat and species" value of the segment. If appropriate, a value class of U was assigned to a stream segment. Five exceptions to this methodology are noteworthy:

1) Migration Corridors: If a stream segment served as a migration corridor for a particular resident fish species or provides spawning habitat for anadromous species (i.e., steelhead) and that species migrated through the corridor to satisfy a particular life history requirement (e.g., to spawn), the river segment was classified as high quality habitat when the value class for that species was determined from Table 1.

2) Rare Species: If a stream segment provided low or intermediate quality habitat for an endangered, threatened or special concern species (e.g., proposed species for listing under the Endangered Species Act), but the distribution or occurrence of that species in the state was extremely limited, the "habitat and species" value was considered 1.

3) Research Sites: If a stream segment is presently the site of resident fish research, particularly long-term research, a value class of 1 was assigned to the segment. In addition, if the stream was one of a few or the only one in the immediate area that was important to a community for science or nature study, the value of the segment was adjusted one class upward.

4) Spawning Habitat: An undesignated tributary stream segment with valuable spawning habitat (class 1 or 2 sport fish value) will upgrade the receiving stream segment accordingly, to a value class of 1 or 2 "habitat and species".

5) Potential Value: If the stream segment has documented potential for habitat improvement within 15 years, potential habitat quality was used in Table 1.

Based on the PNRS "habitat and species" value, one of the three decision options is selected. If the goal of the use attainability assessment is to "field" verify an existing use designation which may be based on the PNRS "habitat and species" value, the unknown decision option should be selected.

Table 1."Habitat and species" value classes of stream segments, as determined by habitat quality and the relative significance of resident fish species present (from Allen et al. 1986).

	RELATIVE SIGNIFICANCE OF SPECIES		
HABITAT QUALITY[1]	High[2]	Intermediate[3]	Low[4]
High	1	2	4
Intermediate	2	3	4
Low	2/3	4	4

1 High, intermediate, and low quality habitats are defined as those which provide optimum, satisfactory and poor environmental conditions, respectively, for the species in question. Environmental factors considered in evaluating habitat quality included, but were not limited to, temperature and other appropriate water quality parameters, instream flow, substrate composition, availability of instream cover, food abundance and quality of riparian habitat.

2 Species of high concern included: 1) endangered, threatened or special concern species as defined in the Idaho Department of Fish and Game "Fisheries Management Plan", and 2) wild, native gamefish species of regional importance (based on angler preference and ecological significance).

3 Species of intermediate concern included: 1) all Idaho gamefish species, except as noted above under species of high concern; 2) all native nongame species in natural, unimpounded environments; and 3) exotic nongame fish populations that serve as a forage base for a species of high concern.

4 Species of low concern included: 1) all exotic nongame species not included above, and 2) native nongame fish populations in altered habitats.

Species Significance

The significance of existing fish species inhabiting the stream segment is evaluated and rated as high, intermediate or low. Existing fish species are considered to be any fish species that represented a viably reproducing population inhabiting the stream segment on or after November 28, 1975, or could represent a viably reproducing population based on existing habitat conditions if water quality were not limiting. Existing fish species are evaluated, and the highest rating obtained for an individual species is taken as the species significance rating for the stream segment. Species significance is rated as follows:

Species of High Significance:

Species of high significance include the endangered, threatened or special concern species as defined in the Idaho Department of Fish and Game (1991) "Fisheries Management Plan" (Table 2). This also includes species proposed for listing by the U.S. Fish and Wildlife Service or the National Marine Fisheries Service.

Species of Intermediate Significance:

Species of intermediate significance consist of all Idaho gamefish species, except as noted above under species of high significance (Table 3).

Species of Low Significance:

Species of low significance include all native and exotic nongame fish species not identified above as species of high or intermediate significance.

Based on the significance rating of the existing fish species, one of the three decision options is selected.

Table 2. Species identified to be of high significance (Idaho Department of Fish and Game 1991).

Common Name	Scientific Name
STURGEONS (family Acipenseridae)	
White Sturgeon	*Acipenser transmontanus*
CODFISHES (family Gadidae)	
Burbot	*Lota lota*
TROUTS (family Salmonidae)	
Chinook salmon (spring)	*Oncorhynchus tshawytscha*
Chinook salmon (summer)	*Oncorhynchus tshawytscha*
Chinook salmon (fall)	*Oncorhynchus tshawytscha*
Sockeye salmon	*Oncorhynchus nerka*
Steelhead trout	*Oncorhynchus mykiss*
Redband trout	*Oncorhynchus sp.*
Westslope cutthroat trout	*Oncorhynchus clarki Lewisi*
Bonneville cutthroat trout	*Oncorhynchus clarki Utah*
Yellowstone cutthroat trout	*Oncorhynchus clarki bouveri*
Bear Lake cutthroat trout	*Oncorhynchus clarki ssp.*
Snake River (fine spot) cutthroat trout	*Oncorhynchus clarki ssp.*
Bear Lake whitefish	*Prosopium abyssicole*
Bonneville cisco	*Prosopium gemmiferum*
Bonneville whitefish	*Prosopium spilonotus*
Sunapee trout	*Salvelinus alpinus aureolis*
Bull trout (Dolly Varden)	*Salvelinus confluentus*
MINNOWS (family Cyprinidae)	
Leatherside chub	*Snyderichthys copei*
SCULPINS (Family Cottidae)	
Bear Lake sculpin	*Cottus extensus*
Shoshone sculpin	*Cottus greenei*
Wood River sculpin	*Cottus leiopomus*
TROUT-PERCHES (family Percopsidae)	
Sand roller	*Percopsidae transmontana*

Table 3. Species identified to be of intermediate significance.

Common Name	Scientific Name
TROUTS (family Salmonidae)	
Golden trout	*Oncorhynchus aquabonita*
Kokanee	*Oncorhynchus nerka*
Coho salmon	*Oncorhynchus kisutch*
Rainbow trout	*Oncorhynchus mykiss*
Mountain whitefish	*Prosopium williamsoni*
Brown trout	*Salmo trutta*
Brook trout	*Salvelinus fontinalis*
Lake trout	*Salvelinus namaycush*
Artic grayling	*Thymallus arcticus*
PIKES (family Esocidae)	
Northern pike	*Esox lucius*
CATFISHES (family Ictaluridae)	
Channel catfish	*Ictalurus punctatus*
Flathead catfish	*Pylodictis olivaris*
SUNFISHES (family Centrachidae)	
Bluegill	*Lepomis macrochirus*
Smallmouth bass	*Micropterus dolomieui*
Largemouth bass	*Micropterus salmoides*
Black crappie	*Pomoxis nigromaculatus*
PERCHES (family Percidae)	
Yellow perch	*Perca flavescens*
Walleye	*Stizostedion vitreum*

Habitat Quality

Habitat quality is evaluated according to the habitat assessment matrix defined in "Rapid Bioassessment Protocols for Use in Streams and Rivers" (Plafkin et al. 1989) and shown in Figure 5. Qualitative habitat quality for a stream segment is rated as excellent (150-180), good (120-149), fair (90-119) or poor (0-89) based on the sum of the completed habitat assessment matrix. Two habitat indices are included for streams which are either predominantly riffle/run or pool/glide. The appropriate decision option is selected based on the stream segment habitat rating. The following discussion describes the habitat assessment matrix in more detail.

Habitat parameters pertinent to the assessment of habitat quality are separated into three principal categories: primary, secondary and tertiary parameters.

Primary parameters are those that characterize the stream "microscale" habitat and have the greatest direct influence on the structure of the indigenous communities. The primary parameters, which include characterization of the bottom substrate and available cover, estimation of embeddedness and estimation of the flow or velocity and depth regime, have the widest score range (0-20) to reflect their contribution to habitat quality.

The secondary parameters measure the "macroscale" habitat such as channel morphology characteristics. These parameters evaluate: channel alteration, bottom scouring and deposition, and stream sinuosity. The secondary parameters have a score range of 0-15. Tertiary parameters evaluate riparian and bank structure and comprise three parameters: bank stability, bank vegetation and streamside cover.

The tertiary parameters have a score range of 0-10. The stream length surveyed or area assessed will vary with each stream segment. Generally, primary parameters are evaluated within the first riffle/pool sequences of the survey site. Secondary and tertiary parameters are evaluated over a larger stream area. The actual habitat assessment process involves rating the nine parameters as optimal, suboptimal, marginal and poor based on the criteria shown in Figure 5.

Figure 5. Qualitative habitat assessment index (Plafkin et al. 1989).

Stream Name: _____ Station: _____ Date: _____ Location Description: _____

IDAHO DEPARTMENT OF HEALTH AND WELFARE
HABITAT ASSESSMENT FIELD DATA SHEET
RIFFLE RUN PREVALENCE

Habitat Parameter	Category: Optimal	Sub-optimal	Marginal	Poor
1. Bottom substrate/ instream cover	Greater than 50% mix of rubble, gravel, submerged logs, undercut banks, or other stable habitat. 16-20 ____	30-50% mix of rubble, gravel, or other stable habitat. Adequate habitat. 11-15 ____	10-30% mix of rubble, gravel, or other stable habitat. Habitat availability less than desirable. 6-10 ____	Less than 10% rubble, gravel or other stable habitat. Lack of habitat is obvious. 0-5 ____
2. Embeddedness	Gravel, cobble, and boulder particles are between 0-25% surrounded by fine sediment. 16-20 ____	Gravel, cobble, and boulder particles are between 25-50% surrounded by fine sediment. 11-15 ____	Gravel, cobble, and boulder particles are between 50-75% surrounded by fine sediment. 6-10 ____	Gravel, cobble, and boulder particles are over 75% surrounded by fine sediment. 0-5 ____
3. ≤ 0.15 cms (5 cfs) at rep. low flow	Cold > 0.05 cms (2 cfs) Warm > 0.15 cms (5 cfs) 16-20 ____	0.03-0.05 cms (1-2 cfs) 0.05-0.15 cms (2-5 cfs) 11-15 ____	0.01-0.03 cms (0.5-1 cfs) 0.03-0.05 cms (1-2 cfs) 6-10 ____	< 0.01 cms (0.5 cfs) < 0.03 cms (1 cfs) 0-5 ____
OR > 0.15 cms (5 cfs) velocity/depth	Slow (< 0.3 m/s), deep (> 0.5 m): slow, shallow (< 0.5 m): fast (> 0.3 m/s), deep; fast, shallow habitats all present. 16-20 ____	Only 3 of the 4 habitat categories present (missing riffles or runs receive lower score than missing pools). 11-15 ____	Only 2 of the 4 habitat categories present (missing riffles or runs receive lower score). 6-10 ____	Dominated by 1 velocity/ depth category (usually pools) 0-5 ____
4. Canopy cover (shading)	A mixture of conditions where some areas of water surface fully exposed to sunlight, and other receiving various degrees of filtered light. 16-20 ____	Covered by sparse canopy; entire water surface receiving filtered light. 11-15 ____	Completely covered by dense canopy; water surface completely shaded OR nearly full sunlight reaching water surface. Shading limited to < 3 hours per day. 6-10 ____	Lack of canopy, full sunlight reaching water surface. 0-5 ____

Figure 5. Continued.

RIFFLE/RUN PREVALENCE
PAGE 2

Habitat Parameter	Category: Optimal	Sub-optimal	Marginal	Poor
5. Channel alteration	Little or no enlargement of islands or point bars, and/or no channelization. 12-15 ____	Some new increase in bar formation, mostly from coarse gravel; and/or some channelization present. 6-11 ____	Moderate deposition of new gravel, coarse sand on old and new bars; and/or embankments on both banks. 4-7 ____	Heavy deposits of fine material, increased bar development; and/or extensive channelization. 0-3 ____
6. Bottom scouring and deposition	Less than 5% of the bottom affected by scouring and/or deposition. 12-15 ____	5-30% affected. Scour at constrictions and where grades steepen. Some deposition in pools. 8-11 ____	30-50% affected. Deposits and/or scour at obstructions, constrictions, and bends. Filling of pools prevalent. 4-7 ____	More than 50% of the bottom changing frequently. Pools almost absent due to deposition. Only large rocks in riffle exposed. 0-3 ____
7. Pool/riffle run/bend ratio (distance between riffles divided by stream width)	Ratio: 5-7. Variety of habitat. Repeat pattern of sequence relatively frequent. 12-15 ____	7-15. Infrequent repeat pattern. Variety of macrohabitat less than optimal. 8-11 ____	15-25. Occasional riffle or bend. Bottom contours provide some habitat. 4-7 ____	> 25. Essentially a straight stream. Generally all flat water or shallow riffle. Poor habitat. 0-3 ____
8. Lower bank channel capacity	Overbank (lower) flows rare. Lower bank W/D ratio < 7. (Channel width divided by depth or height of lower bank.) 12-15 ____	Overbank (lower) flows occasional. W/D ratio 8-15. 8-11 ____	Overbank (lower) flows common. W/D ratio 15-25. 4-7 ____	Peak flows not contained or contained through channelization. W/D ratio > 25. 0-3 ____
9. Upper bank stability	Upper bank stable. No evidence of erosion or bank failure. Side slopes generally < 30°. Little potential for future problems. 9-10 ____	Moderately stable. Infrequent, small areas of erosion mostly healed over. Side slopes up to 40° on one bank. Slight potential in extreme floods. 6-8 ____	Moderately unstable. Moderate frequency and size of erosional areas. Side slopes up to 60° on some banks. High erosion potential during extreme high flow. 3-5 ____	Unstable. Many eroded areas. "Raw" areas frequent along straight sections and bends. Side slopes > 60° common. 0-2 ____

Figure 5. Continued

RIFFLE/RUN PREVALENCE
PAGE 3

Habitat Parameter	Category: Optimal	Sub-optimal	Marginal	Poor
10. Bank vegetation protection	Over 90% of the stream-bank surfaces covered by vegetation. 9-10 ____	70-89% of the stream-bank surfaces covered by vegetation. 6-8 ____	50-79% of the streambank surfaces covered by vegetation. 3-5 ____	Less than 50% of the streambank surfaces covered by vegetation. 0-2 ____
OR Grazing or other disruptive pressure	Vegetative disruption minimal or not evident. Almost all potential plant biomass at present stage of development remains. 9-10 ____	Disruption evident but not affecting community vigor. Vegetative use is moderate, and at least one-half of the potential plant biomass remains. 6-8 ____	Disruption obvious; some patches of bare soil or closely cropped vegetation present. Less than one-half of the potential plant biomass remains. 3-5 ____	Disruption of streambank vegetation is very high. Vegetation has been removed to 2 inches or less in average stubble height. 0-2 ____
11. Streamside cover	Dominant vegetation is shrub. 9-10 ____	Dominant vegetation is of tree form. 6-8 ____	Dominant vegetation is grass or forbes. 3-5 ____	Over 50% of the streambank has no vegetation and dominant material is soil, rock, bridge materials, culverts, or mine tailings. 0-2 ____
12. Riparian vegatitive zone width (least buffered side)	> 18 meters 9-10 ____	Between 12 and 18 meters. 6-8 ____	Between 6 and 12 meters. 3-5 ____	< 6 meters 0-2 ____
Column Totals	____	____	____	____

SCORE _____

Figure 5. Continued

Stream Name: _____ Station: _____ Date: _____ Location Description: _____

IDAHO DEPARTMENT OF HEALTH AND WELFARE
HABITAT ASSESSMENT FIELD DATA SHEET
GLIDE/POOL PREVALENCE

Habitat Parameter	Category: Optimal	Sub-optimal	Marginal	Poor
1. Bottom substrate/ instream cover	Greater than 50% mix of rubble, gravel, submerged logs, undercut banks, or other stable habitat. 16-20 ____	30-50% mix of rubble, gravel, or other stable habitat. Adequate habitat. 11-15 ____	10-30% mix of rubble, gravel, or other stable habitat. Habitat availability less than desirable. 6-10 ____	Less than 10% rubble, gravel or other stable habitat. Lack of habitat is obvious. 0-5 ____
2. Pool substrate characterization	Mixture of substrate materials with gravel and firm sand prevalent, root mats and submerged vegetation common. 16-20 ____	Mixture of soft sand, mud, or clay; mud may be dominant; some root mats and submerged vegetation present. 11-15 ____	All mud or clay or channelized with sand bottom; little or no root mat; no submerged vegetation. 6-10 ____	Hard-pan clay or bedrock; no root mat or vegetation. 0-5 ____
3. Pool variability	Even mix of deep/shallow/ large/small pools present. 16-20 ____	Majority of pools large and deep; very few shallow. 11-15 ____	Shallow pools much more prevalent than deep pools. 6-10 ____	Majority of pools small and ahallow or pools absent. 0-5 ____
4. Canopy cover (shading)	A mixture of conditions where some areas of water surface fully exposed to sunlight, and other receiving various degrees of filtered light. 16-20 ____	Covered by sparse canopy; entire water surface receiving filtered light. 11-15 ____	Completely covered by dense canopy; water surface completely shaded OR nearly full sunlight reaching water surface. Shading limited to < 3 hours per day. 6-10 ____	Lack of canopy, full sunlight reaching water surface. 0-5 ____

Figure 5. Continued.

GLIDE/POOL PREVALENCE
PAGE 2

Habitat Parameter	Category: Optimal	Sub-optimal	Marginal	Poor
5. Channel alteration	Little or no enlargement of islands or point bars, and/or no channelization. 12-15 ____	Some new increase in bar formation, mostly from coarse gravel; and/or some channelization present. 8-11 ____	Moderate deposition of new gravel, coarse sand on old and new bars; and/or embankments on both banks. 4-7 ____	Heavy deposits of fine material, increased bar development; and/or extensive channelization. 0-3 ____
6. Deposition	Less than 5% of bottom affected; minor accumulation of coarse sand and pebbles at snags and submerged vegetation. 12-15 ____	5-30% affected; moderate accumulation of sand at snags and submerged vegetation. 8-11 ____	30-50% affected; major deposition of sand at snags and submerged vegetation; pools shallow, heavily silted. 4-7 ____	Channelized; mud, silt, and/or sand in braided or nonbraided channels; pools almost absent due to deposition. 0-3 ____
7. Channel sinuosity	Instream channel length 3 to 4 times straight line distance. 12-15 ____	Instream channel length 2 to 3 times straight line distance. 8-11 ____	Instream channel length 1 to 2 times straight line distance. 4-7 ____	Channel straight; channelized waterway. 0-3 ____
8. Lower bank channel capacity	Overbank (lower) flows rare. Lower bank W/D ratio < 7. (Channel width divided by depth or height of lower bank.) 12-15 ____	Overbank (lower) flows occasional. W/D ratio 8-15. 8-11 ____	Overbank (lower) flows common. W/D ratio 15-25. 4-7 ____	Peak flows not contained or contained through channelization. W/D ratio > 25. 0-3 ____
9. Upper bank stability	Upper bank stable. No evidence of erosion or bank failure. Side slopes generally < 30°. Little potential for future problems. 9-10 ____	Moderately stable. Infrequent, small areas of erosion mostly healed over. Side slopes up to 40° on one bank. Slight potential in extreme floods. 6-8 ____	Moderately unstable. Moderate frequency and size of erosional areas. Side slopes up to 60° on some banks. High erosion potential during extreme high flow. 3-5 ____	Unstable. Many eroded areas. "Raw" areas frequent along straight sections and bends. Side slopes > 60° common. 0-2 ____

Figure 5. Continued

GLIDE/POOL PREVALENCE
PAGE 3

Habitat Parameter	Category: Optimal	Sub-optimal	Marginal	Poor
10. Bank vegetation protection	Over 90% of the streambank surfaces covered by vegetation. 9-10 ____	70-89% of the streambank surfaces covered by vegetation. 6-8 ____	50-79% of the streambank surfaces covered by vegetation. 3-5 ____	Less than 50% of the streambank surfaces covered by vegetation. 0-2 ____
OR Grazing or other disruptive pressure	Vegetative disruption minimal or not evident. Almost all potential plant biomass at present stage of development remains. 9-10 ____	Disruption evident but not affecting community vigor. Vegetative use is moderate, and at least one-half of the potential plant biomass remains. 6-8 ____	Disruption obvious; some patches of bare soil or closely cropped vegetation present. Less than one-half of the potential plant biomass remains. 3-5 ____	Disruption of streambank vegetation is very high. Vegetation has been removed to 2 inches or less in average stubble height. 0-2 ____
11. Streamside cover	Dominant vegetation is shrub. 9-10 ____	Dominant vegetation is of tree form. 6-8 ____	Dominant vegetation is grass or forbes. 3-5 ____	Over 50% of the streambank has no vegetation and dominant material is soil, rock, bridge materials, culverts, or mine tailings. 0-2 ____
12. Riparian vegetative zone width (least buffered side)	> 18 meters 9-10 ____	Between 12 and 18 meters. 6-8 ____	Between 6 and 12 meters. 3-5 ____	< 6 meters 0-2 ____
Column Totals	____	____	____	____

SCORE _____

1. **Bottom Substrate**--This refers to the availability of habitat for support of aquatic organisms. A variety of substrate materials and habitat types is desirable. The presence of rock and gravel in flowing streams is generally considered the most desirable habitat. Bottom substrate is evaluated and rated by observation.

2. **Embeddedness--**The degree to which boulders, rubble, or gravel are surrounded by fine sediment indicates suitability of the stream substrate as habitat for benthic macroinvertebrates and for fish spawning and egg incubation. Embeddedness is evaluated by visual observation of the degree to which larger particles are surrounded by sediment.

3. **Stream Flow and/or Stream Velocity--**Stream flow relates to the ability of a stream to provide and maintain a stable aquatic environment. Stream flow (water quantity) is most critical to the support of aquatic communities when the representative low flow is $\leq$ 5 cfs. In these small streams, flow should be estimated in a straight stretch of run area where banks are parallel and bottom contour is relatively flat. Even where a few stations may have flows in excess of 5 cfs, flow may still be the predominating constraint. Therefore, the evaluation is based on flow rather than velocity. In larger streams (> 5 cfs), velocity, in conjunction with depth, has a more direct influence than flow on the structure of benthic communities. The quality of the aquatic habitat can therefore be evaluated in terms of a velocity and depth relationship. Four general categories of velocity and depth are optimal for benthic and fish communities: 1) slow (<0.3 m/s), shallow (<0.5 m); 2) slow (<0.3 m/s), deep (>0.5 m); 3) fast (>0.3 m/s), deep (>0.5 m); and 4) fast (>0.3 m/s), shallow (<0.5 m). Habitat quality is reduced in the absence of one or more of these four categories.

4. **Channel Alteration--**The character of sediment deposits from upstream is an indication of the severity of watershed and bank erosion and stability of the stream system. The growth or appearance of sediment bars tends to increase in depth and length with continued watershed disturbance. Channel alteration also results in deposition, which may occur on the inside of bends, below channel constrictions, and where stream gradient flattens out. Channelization decreases stream sinuosity, thereby increasing stream velocity and the potential for scouring.

5. **Bottom Scouring and Deposition--**These parameters relate to the destruction of instream habitat resulting from the problems described above. Characteristics to observe are scoured substrate and degree of siltation in pools and riffles. Scouring results from high velocity flows. The potential for scouring is increased by channelization. Deposition and scouring result from the transport of sediment or other particulates and may be an indication of large scale watershed erosion. Deposition and scouring is rated by estimating the percentage of an evaluated reach that is scoured or silted

(i.e., 50-ft silted in a 100-ft stream length equals 50 percent).

6. **Pool/Riffle or Run/Bend Ratio--**These parameters assume that a stream with riffles or bends provides more diverse habitat than a straight (run) or uniform depth stream. Bends are included because low gradient streams may not have riffles areas, but excellent habitat can be provided by the cutting action of water at bends. The ratio is calculated by dividing the average distance between riffles or bends by the average stream width.

7. **Bank Stability--**Bank stability is rated by observing existing or potential detachment of soil from the upper and lower stream bank and its potential movement into the stream. Steeper banks are generally more subject to erosion and failure, and may not support stable vegetation. Streams with poor banks will often have poor instream habitat.

8. **Bank Vegetative Stability--**Bank soil is generally held in place by plant root systems. Erosional protection may also be provided by boulder, cobble, or gravel material. An estimate of the density of bank vegetation (or proportion of boulder, cobble, or gravel material) covering the bank provides an indication of bank stability and potential instream sedimentation.

9. **Streamside Cover--**Streamside cover vegetation is evaluated in terms of provision of stream-shading and escape cover or refuge for fish. A rating is obtained by visually determining the dominant vegetation type covering the exposed stream bottom, bank, and top of bank. Other forms of habitat may provide the niches required for community support. For example, logs, tree roots, submerged or emergent vegetation, undercut banks, etc., will provide excellent habitat for a variety of organisms, particularly fish.

Preliminary Use Classification

The preliminary use classification represents the beneficial use attainable on the stream segment before allowances are made for natural and irretrievable man-induced water pollution and economic/social consequences of use designation.

Existing Use

If the stream segment supported the beneficial use in question at any time on or after November 28, 1975, it is deemed an existing use and the "yes" decision option is selected. In accordance with the Clean Water Act, existing uses are deemed attainable use that may not be "downgraded" for any reason (e.g., economic or social considerations, etc.).

Natural or Human-Caused Pollution

If naturally occurring pollutant concentrations prevent the attainment of the use in question, the "yes" decision option is selected. The "yes" decision option is also selected if human-caused conditions or sources of pollution that can not be remedied, or would cause more environmental damage to correct than to leave in place, prevent the attainment of the use in question. Where "background" pollution limits beneficial use attainment, site-specific criteria should be established to protect "existing" water quality. Such stream segments should be evaluated as part of each triennial water quality standards revision to determine if "background" water quality has improved to the extent that appropriate beneficial uses can be supported.

Widespread Economic and Social Impact

The "yes" decision option is selected if supporting the use in question would require controls more stringent than those required by Sections 301(b) and 306 of the Clean Water Act, and the controls would result in substantial and widespread economic and social impact.

Final Use Classification

The final use classification is the use designation assigned in the water quality standards.

WATER SUPPLY

Use attainability and designation of a stream segment for a drinking, agricultural or industrial water supply use is based on the actual (existing) use of the stream segment. If the stream segment is used as a drinking, agricultural or industrial water supply, then that use is deemed attainable and the use designated for the stream segment.

WILDLIFE HABITAT

Use attainability and designation of a stream segment for a wildlife habitat use is based on the actual (existing) use of the stream segment. Unless naturally occurring or human-caused

pollution (which would cause more environmental damage to correct than to leave in place) preclude a stream's use as wildlife habitat, wildlife habitat is considered to be an existing use, and therefore, an attainable use of all stream segments.

AESTHETICS AND HUMAN HEALTH

Aesthetics and human health are deemed existing uses, and therefore, attainable uses of all stream segments. All stream segments are designated for Aesthetics and Human Health uses.

SPECIAL RESOURCE WATERS

Stream segments may be designated as Special Resource Waters. Special Resource Waters are those specific stream segments or water bodies which are recognized as needing intensive protection, particularly from point source discharges, to preserve outstanding or unique characteristics or to maintain existing beneficial uses. Designation as a special resource water recognizes at least one of the following characteristics:

1) The stream segment is of outstanding high quality, exceeding both criteria for primary contact recreation and cold water biota.

2) The stream segment is of unique ecological significance.

3) The stream segment possesses outstanding recreational or aesthetic qualities.

4) The intensive protection of the quality of the water is in the paramount interest of the people of Idaho.

5) The stream segment is part of the National Wild and Scenic River system, is within a State or National Park or wildlife refuge and is of prime or major importance to that park or refuge.

6) Intensive protection of the quality of the water is necessary to maintain an existing, but jeopardized beneficial use.

OUTSTANDING RESOURCE WATERS

An Outstanding Resource Water (ORW) is a high quality water, such as water of national and state parks and wildlife refuges and water of exceptional recreational or ecological significance, which has been designated by the legislature and subsequently listed in Idaho Department of Health and Welfare (1990) Rules and Regulations, Title 1, Chapter 2, "Water Quality Standards and Wastewater Treatment Requirements." An ORW constitutes an outstanding national or state resource that requires protection from nonpoint source activities that may lower water quality. Stream segments

are designated as Outstanding Resource Waters pursuant to Idaho Department of Health and Welfare Rules and Regulations Section 01.2053 ("Water Quality Standards and Wastewater Treatment Requirements").

REFERENCES

Allen, S., J. Putera, and C. Jazdzewski. 1986. Pacific northwest rivers study 1986 final report, Idaho. Idaho Fish and Game, Boise, Idaho.

Cochnauer, T., and T. Elms. 1986. Probablity of use curves for selected Idaho fish species. Idaho Department of Fish and Game, Bureau of Fisheries, Project Performance Report, Project F-71-R-10, Boise. 49 pp.

Idaho Department of Fish and Game. 1991. Fisheries Management Plan 1991-1995. Boise, Idaho. 292 pp.

Idaho Department of Health and Welfare. 1990. Rules and regulations of the Department of Health and Welfare, water quality standards and wastewater treatment requirements, Title 1, Chapter 2. Boise, Idaho.

Plafkin, J.L., M.T. Barbour, K.D. Porter, S.K. Gross, and R.M. Hughes. 1989. Rapid bioassessment protocols for use in streams and rivers. Benthic macroinvertebrates and fish. EPA/444/4-89-001, U.S. Environmental Proteciton Agency, Washington, D.C. 177 pp.

U.S. Environmental Protection Agency. 1983. U.S. Environmental Protection Agency). 1983. Technical support manual: waterbody surveys and assessment for conducting use attainability analyses. Office of Water Regulations and Standards. Washington, D.C.

Appendix A.

A List of Resource Value Classes From the Pacific Northwest Rivers Study

For All Hydrologic Units In Idaho (from Allen et al. 1986)

16010102 BEAR RIVER (ABOVE WARDBORO)

SEGMENT #	STREAM SEGMENT	LOWER BOUNDARY	UPPER BOUNDARY	RESIDENT FISH	WILDLIFE	CULTURAL	NATURAL FEATURES	RECREATION
273.00	BEAR R	WARDBORO	WYOMING LINE	3	1	3	1	4
274.00	THOMAS FORK CR	BEAR R	WYOMING LINE	3	1	U	U	U
275.00	PREUSS CR	THOMAS FK	HEADWATERS	1	2	U	U	U
276.00	DRY CR	THOMAS FK	HEADWATERS	1	2	U	U	U
277.00	GIRAFFE CR	THOMAS FK	HEADWATERS	1	2	U	U	U

16010201 BEAR RIVER (ALEXANDER RES. TO WARDBORO)

SEGMENT #	STREAM SEGMENT	LOWER BOUNDARY	UPPER BOUNDARY	RESIDENT FISH	WILDLIFE	CULTURAL	NATURAL FEATURES	RECREATION
252.00	ALEXANDER RES			3	1	U	3	U
253.00	BEAR R	ALEXANDER RES	WARDBORO	3	1	3	1	4
254.00	SODA CR	BEAR R	HEADWATERS	4	1	U	1	U
255.00	BAILEY CR	BEAR R	HEADWATERS	2	2	U	U	U
256.00	EIGHTMILE CR	BEAR R	HEADWATERS	2	1	4	U	U
257.00	PEARL CR	BEAR R	HEADWATERS	2	2	U	U	U
258.00	STAUFFER CR	BEAR R	HEADWATERS	U	3	U	U	U
259.00	COOP CR	STAUFFER CR	HEADWATERS	2	3	4	U	U
260.00	GEORGETOWN CR	BEAR R	HEADWATERS	2	1	4	1	U
261.00	OVID CR	BEAR R	HEADWATERS	2	1	U	U	U
262.00	MONTPELIER CR	BEAR R	MONTPELIER RES	2	1	U	1	U
263.00	MONTPELIER RES			2	1	U	U	U
264.00	MONTPELIER CR	MONTPELIER RES	HEADWATERS	1	1	U	3	U
265.00	SNOWSLIDE CR	MONTPELIER CR	HEADWATERS	1	1	U	U	U
266.00	PARIS CR	BEAR R	HEADWATERS	3	2	U	3	U
267.00	BLOOMINGTON CR	REFUGE	HEADWATERS	1	2	U	1	U
268.00	ST CHARLES CR	REFUGE	HEADWATERS	1	1	U	1	U
269.00	LITTLE CR	BEAR LK	ST CHARLES CR	1	4	U	U	U
270.00	FISH HAVEN CR	BEAR LK	HEADWATERS	1	1	U	U	U

16010202 BEAR RIVER (UT LINE TO ALEX.RESERV.)

SEGMENT #	STREAM SEGMENT	LOWER BOUNDARY	UPPER BOUNDARY	RESIDENT FISH	WILDLIFE	CULTURAL	NATURAL FEATURES	RECREATION
230.00	THOMAS CR	BEAR R	WYOMING LINE	U	1	0	U	U
231.00	BEAR R	UTAH LINE	HIGHWAY 91	3	3	U	1	4
231.01	LAMONT RES			1	4	U	U	U
231.02	JOHNSON RES			1	4	U	U	U
231.03	FOSTER RES			1	4	U	U	U
231.04	GLENDALE RES			1	4	U	U	U
232.00	BEAR R	HIGHWAY 91	MINK CR	2	1	U	2	2
233.00	BEAR R	MINK CR	ONEIDA DAM	2	1	U	1	2
234.00	ONEIDA NARROWS RES			1	1	U	3	U
235.00	BEAR R	ONEIDA RES	COVE POWER PLANT	3	1	U	3	4
236.00	BEAR R	COVE POWER PLANT	ALEXANDER DAM	1	1	U	2	2

16010202 BEAR RIVER (UT LINE TO ALEX.RESERV.) [Cont.]

SEGMENT #	STREAM SEGMENT	LOWER BOUNDARY	UPPER BOUNDARY	RESIDENT FISH	WILDLIFE	CULTURAL	NATURAL FEATURES	RECREATION
237.00	CUB R	UTAH LINE	HEADWATERS	2	2	U	U	2
238.00	WESTON CR	BEAR R	HEADWATERS	U	2	1	U	U
239.00	WESTON CREEK RES			1	4	U	U	U
240.00	BATTLE CR	BEAR R	HEADWATERS	U	2	U	2	U
240.01	WINDER RES			1	4	U	U	U
240.02	TWIN LKS			1	3	U	U	U
241.00	STRONGARM RES			U	3	U	U	U
242.00	CONDIE RES			1	3	U	U	U
243.00	TREASURTON RES			1	3	U	U	U
244.00	MINK CR	BEAR R	HEADWATERS	2	3	U	1	U
245.00	COTTONWOOD CR	BEAR R	HEADWATERS	1	1	U	3	U
246.00	WILLIAMS CR	BEAR R	HEADWATERS	2	2	U	U	U
247.00	TROUT CR	BEAR R	HEADWATERS	3	3	U	U	U
248.00	WHISKEY CR	BEAR R	HEADWATERS	3	3	U	1	U
249.00	DENMORE CR	BEAR R	HEADWATERS	U	3	U	U	U

16010203 LOGAN RIVER (HEADWATERS ONLY)

SEGMENT #	STREAM SEGMENT	LOWER BOUNDARY	UPPER BOUNDARY	RESIDENT FISH	WILDLIFE	CULTURAL	NATURAL FEATURES	RECREATION
280.00	LOGAN R	T16SR42ES30,UTAH LIN	HEADWATERS	U	1	U	U	U
281.00	BEAVER CR	T16SR42ES14,UTAH LIN	HEADWATERS	U	1	U	U	U

16010204 MALAD RIVER (UT LINE TO HEADWATERS)

SEGMENT #	STREAM SEGMENT	LOWER BOUNDARY	UPPER BOUNDARY	RESIDENT FISH	WILDLIFE	CULTURAL	NATURAL FEATURES	RECREATION
284.00	MALAD R	UTAH LINE	PLEASANT VIEW	U	2	U	3	U
285.00	MALAD R	PLEASANT VIEW	HEADWATERS	U	2	U	3	U
286.00	DEEP CR	MALAD R	DEEP CR RES	U	3	U	U	U
287.00	DEEP CREEK RES			2	4	U	U	U
288.00	DEEP CR	DEEP CR RES	HEADWATERS	1	2	U	U	U
289.00	SAMARIA CR	MALAD R	HEADWATERS	U	3	U	U	U
290.00	DEVIL CR	MALAD R	HEADWATERS	1	3	U	U	U
291.00	DEVIL CREEK RES			2	4	U	U	U
292.00	LITTLE MALAD R	MALAD R	HEADWATERS	4	3	U	3	U
293.00	DANIELS RES			2	4	U	U	U
294.00	WRIGHT CR	DANIELS RES	HEADWATERS	3	2	U	U	U

16020309 DEEP CREEK (UT LINE TO HW)

SEGMENT #	STREAM SEGMENT	LOWER BOUNDARY	UPPER BOUNDARY	RESIDENT FISH	WILDLIFE	CULTURAL	NATURAL FEATURES	RECREATION
297.00	DEEP CR	UTAH LINE	HEADWATERS	U	2	U	U	U
298.00	STONE RES			2	1	U	U	U
299.00	ROCK CR	DEEP CR	HEADWATERS	U	2	U	1	U

17010101 CALLAHAN CREEK (TO MONTANA LINE)

SEGMENT #	STREAM SEGMENT	LOWER BOUNDARY	UPPER BOUNDARY	RESIDENT FISH	WILDLIFE	CULTURAL	NATURAL FEATURES	RECREATION
1404.00	CALLAHAN CR	MONTANA LINE	HEADWATERS	U	1	U	U	U

17010104 KOOTENAI RIVER (MT LINE TO CANADA LINE)

SEGMENT #	STREAM SEGMENT	LOWER BOUNDARY	UPPER BOUNDARY	RESIDENT FISH	WILDLIFE	CULTURAL	NATURAL FEATURES	RECREATION
1362.00	KOOTENAI R	MONTANA LINE	BONNERS FERRY	1	1	2	1	2
1363.00	KOOTENAI R	BONNERS FERRY	CANADA LINE	1	1	1	U	U
1364.00	RAYMOND CR	MONTANA LINE	HEADWATER R3ET32NS32	U	1	U	U	U
1365.00	BOULDER CR	KOOTENAI R	HEADWATERS	U	1	2	1	3
1366.00	BOULDER CR, E FK	BOULDER CR	HEADWATERS	U	1	3	U	3
1367.00	CURLEY CR	KOOTENAI R	HEADWATERS	U	1	U	U	U
1368.00	DEEP CR	KOOTENAI R	MCARTHUR L	1	3	2	2	U
1369.00	DEEP CR	MCARTHUR L	HEADWATERS	U	2	2	U	U
1370.00	SNOW CR	DEEP CR	HEADWATERS	2	1	3	3	U
1371.00	CARIBOU CR	SNOW CR	HEADWATERS	2	1	U	U	U
1372.00	RUBY CR	DEEP CR	HEADWATERS	1	1	U	U	U
1373.00	TWENTYMILE CR	DEEP CR	HEADWATERS	2	1	3	U	U
1374.00	FALL CR	DEEP CR	HEADWATERS	1	1	4	U	U
1375.00	TRAIL CR	DEEP CR	HEADWATERS	1	1	4	U	U
1376.00	DODGE CR	MCARTHUR L	HEADWATERS	1	1	3	U	U
1377.00	MYRTLE CR	KOOTENAI R	HEADWATERS	1	1	3	U	3
1378.00	CASCADE CR	MYRTLE CR	HEADWATERS	2	1	3	U	U
1379.00	BALL CR	KOOTENAI R	HEADWATERS	U	1	4	U	U
1380.00	ROCK CR	KOOTENAI R	HEADWATERS	U	3	2	U	U
1381.00	TROUT CR	KOOTENAI R	HEADWATERS	2	1	3	U	U
1382.00	MISSION CR	KOOTENAI R	HEADWATERS	U	3	2	3	U
1383.00	PARKER CR	KOOTENAI R	COPELAND BDRY ROAD	3	3	U	U	U
1384.00	PARKER CR	COPELAND BDRY ROAD	HEADWATERS	U	1	U	U	U
1385.00	LONG CANYON CR	KOOTENAI R	COPELAND BDRY ROAD	2	3	U	U	2
1386.00	LONG CANYON CR	COPELAND BDRY ROAD	HEADWATERS	1	1	U	1	2
1387.00	SMITH CR	KOOTENAI R	SMITH FALLS	2	3	U	3	3
1388.00	SMITH CR	SMITH FALLS	HEADWATERS	2	1	U	1	3
1389.00	BOUNDARY CR	KOOTENAI R	COPELAND BDRY ROAD	2	3	U	U	U
1390.00	BOUNDARY CR	COPELAND BDRY ROAD	HEADWATERS	1	1	2	U	U
1391.00	GRASS CR	BOUNDARY CR	HEADWATERS	1	1	0	U	U
1392.00	BLUE JOE CR	BOUNDARY CR	HEADWATERS	2	1	0	U	U

17010105 MOYIE RIVER (ENTIRE DRAINAGE)

SEGMENT #	STREAM SEGMENT	LOWER BOUNDARY	UPPER BOUNDARY	RESIDENT FISH	WILDLIFE	CULTURAL	NATURAL FEATURES	RECREATION
1395.00	MOYIE R	KOOTENAI R	MOYIE FALLS DAM	U	3	2	2	1
1396.00	MOYIE R	MOYIE FALLS DAM	MEADOW CR	1	3	2	2	3
1396.10	MOYIE R	MEADOW CR	CANADA LINE	2	3	U	U	U
1397.00	SKIN CR	MOYIE R	HEADWATERS	U	1	U	U	U
1398.00	DEER CR	MOYIE R	HEADWATERS	1	1	2	U	3
1399.00	MEADOW CR	MOYIE R	HEADWATERS	1	2	U	U	U
1400.00	ROUND PRARIE CR	MOYIE R	HEADWATERS	1	2	2	3	U
1400.01	GILLON CR	ROUND PRAIRIE CR	HEADWATERS	2	3	U	U	U
1401.00	CANUCK CR	MOYIE R	HEADWATERS	U	1	2	U	U

17010213 CLARKS FORK (TO MONTANA LINE)

SEGMENT #	STREAM SEGMENT	LOWER BOUNDARY	UPPER BOUNDARY	RESIDENT FISH	WILDLIFE	CULTURAL	NATURAL FEATURES	RECREATION
1471.00	CLARK FORK R	PEND OREILLE L	CABINET GORGE	1	1	3	1	3
1472.00	JOHNSON CR	CLARKS FK	HEADWATERS	1	1	2	U	U
1473.00	LIGHTNING CR	CLARKS FK	QUARTZ CR	1	1	2	1	3
1473.01	LIGHTNING CR, E FK	LIGHTNING CR	HEADWATERS	1	1	U	U	U
1473.02	PORCUPINE CR	LIGHTNING CR	HEADWATERS	1	1	U	U	U
1473.03	BATTLE CR	LIGHTNING CR	HEADWATERS	1	1	U	U	U
1474.00	LIGHTNING CR	QUARTZ CR	HEADWATERS	U	1	3	2	3
1475.00	SPRING CR	LIGHTNING CR	HEADWATERS	2	3	U	U	U
1476.00	WELLINGTON CR	LIGHTNING CR	FALLS	1	1	3	2	U
1477.00	WELLINGTON CR	FALLS	HEADWATERS	U	1	U	2	U
1478.00	TWIN CR	CLARKS FK	HEADWATERS	1	1	2	U	U

17010214 PEND OREILLE RIVER (ENTIRE DRAINAGE)

SEGMENT #	STREAM SEGMENT	LOWER BOUNDARY	UPPER BOUNDARY	RESIDENT FISH	WILDLIFE	CULTURAL	NATURAL FEATURES	RECREATION
1436.00	PEND OREILLE R	WASHINGTON LINE	PEND OREILLE L	U	1	2	1	2
1437.00	BRICKEL CR	SPIRIT L	WASHINGTON LINE	2	2	U	U	U
1438.00	SPIRIT CR	SPIRIT L	SUB AREA	3	3	U	U	U
1439.00	RILEY CR	PEND OREILLE R	HEADWATERS	U	3	4	U	U
1440.00	HOODOO CR	PEND OREILLE R	HOODOO L	1	2	4	U	U
1441.00	HOODOO CR	HOODOO L	HEADWATERS	2	3	3	2	U
1442.00	COCOLALLA CR	PEND OREILLE R	COCOLALLA L	U	2	U	U	U
1443.00	COCOLALLA CR	COCOLALLA L	HEADWATERS	U	2	U	U	U
1444.00	CARR CR	PEND OREILLE R	HEADWATERS	U	3	U	U	U
1445.00	SANDPOINT CR	PEND OREILLE L	HEADWATERS	2	3	4	U	U
1446.00	SAND CR, LITTLE	SAND CR	HEADWATERS	2	3	U	U	U
1447.00	SCHWEITZER CR	SAND CR	HEADWATERS	U	2	U	U	U
1448.00	SAGLE CR (FRY CR)	PEND OREILLE L	HEADWATERS	U	1	U	U	U
1449.00	PACK R	PEND OREILLE L	HIGHWAY 95	1	1	U	2	3
1450.00	PACK R	HIGHWAY 95	PACK R, W BR	1	2	U	3	2

17010214 PEND OREILLE RIVER (ENTIRE DRAINAGE) [Cont.]

SEGMENT #	STREAM SEGMENT	LOWER BOUNDARY	UPPER BOUNDARY	RESIDENT FISH	WILDLIFE	CULTURAL	NATURAL FEATURES	RECREATION
1451.00	PACK R	PACK R, W BR	HEADWATERS	1	1	U	3	2
1452.00	TROUT CR	PACK R	HEADWATERS	U	1	3	U	U
1453.00	RAPID LIGHTNING CR	PACK R	HEADWATERS	2	1	3	3	U
1454.00	GOLD CR	PACK R	HEADWATERS	U	1	U	U	U
1455.00	GROUSE CR	PACK R	HEADWATERS	1	1	U	3	U
1456.00	SAND CR	PACK R	HEADWATERS	U	1	3	1	U
1457.00	BERRY CR	PACK R	HEADWATERS	U	3	3	U	U
1458.00	CARIBOU CR	PACK R	HEADWATERS	2	3	3	U	U
1459.00	HELLROARING CR	PACK R	HEADWATERS	2	1	4	3	U
1460.00	JERU CR	PEND OREILLE L	HEADWATERS	2	1	U	3	U
1461.00	MCCORMICK CR	PACK R	HEADWATERS	U	1	U	U	U
1462.00	TRESTLE CR	PEND OREILLE L	HEADWATERS	1	1	2	2	U
1463.00	STRONG CR	PEND OREILLE L	HEADWATERS	U	1	2	U	U
1464.00	RISER CR	PEND OREILLE L	HEADWATERS	2	1	4	U	U
1465.00	GRANITE CR	PEND OREILLE L	HEADWATERS	1	1	3	U	U
1466.00	CEDAR CR	PEND OREILLE L	HEADWATERS	3	2	U	U	U
1467.00	GOLD CR, N	PEND OREILLE L	HEADWATERS	1	3	4	U	U
1468.00	GOLD CR	PEND OREILLE L	HEADWATERS	1	3	3	U	U

17010215 PRIEST RIVER (ENTIRE DRAINAGE)

SEGMENT #	STREAM SEGMENT	LOWER BOUNDARY	UPPER BOUNDARY	RESIDENT FISH	WILDLIFE	CULTURAL	NATURAL FEATURES	RECREATION
1407.00	PRIEST R	PEND ORIELLE R	PRIEST R, W BR UPPER	U	1	2	3	2
1408.00	PRIEST R	PRIEST R, W BR UPPER	PRIEST L	3	1	2	1	2
1409.00	PRIEST R	PRIEST L	UPPER PRIEST L	1	1	1	1	1
1410.00	PRIEST R	UPPER PRIEST L	HEADWATERS	1	1	2	1	1
1411.00	PRIEST R, W BR LOWER	PRIEST R	HEADWATERS	2	2	3	3	U
1412.00	MOORES CR	PRIEST R, W BR LOWER	HEADWATERS	U	2	3	U	3
1413.00	QUARTZ CR	PRIEST R	HEADWATERS	U	2	3	U	3
1414.00	BIG CR	PRIEST R	HEADWATERS	U	3	U	U	U
1415.00	EAST R	PRIEST R	HEADWATERS	U	2	U	1	U
1416.00	PRIEST R, W BR UPPER	PRIEST R	HEADWATERS	U	2	3	3	U
1417.00	GOOSE CR	PRIEST R, W BR UPPER	HEADWATERS	2	3	4	U	U
1418.00	BINARCH CR	PRIEST R	HEADWATERS	U	2	3	1	U
1419.00	LAMB CR	PRIEST L	HEADWATERS	U	1	4	U	U
1420.00	SOLDIER CR	PRIEST L	HEADWATERS	U	2	U	U	U
1421.00	KALISPELL CR	PRIEST L	HEADWATERS	2	1	3	1	U
1422.00	HUNT CR	PRIEST L	HEADWATERS	1	1	U	U	U
1423.00	INDIAN CR	PRIEST L	HEADWATERS	1	1	U	2	U
1424.00	REEDER CR	PRIEST L	HEADWATERS	2	1	4	2	U
1425.00	BEAR CR	PRIEST L	HEADWATERS	U	1	U	U	U
1426.00	GRANITE CR	PRIEST L	WASHINGTON LINE	1	1	3	U	3
1427.00	TWOMOUTH CR	PRIEST L	HEADWATERS	2	1	U	U	U
1428.00	TANGO CR	PRIEST L	HEADWATERS	2	1	4	U	U
1429.00	BEAVER CR	PRIEST L	HEADWATERS	2	1	4	U	U
1430.00	LION CR	PRIEST L	HEADWATERS	1	1	U	U	U

17010215 PRIEST RIVER (ENTIRE DRAINAGE) [Cont.]

SEGMENT #	STREAM SEGMENT	LOWER BOUNDARY	UPPER BOUNDARY	RESIDENT FISH	WILDLIFE	CULTURAL	NATURAL FEATURES	RECREATION
1431.00	CARIBOU CR	PRIEST R	HEADWATERS	1	1	U	3	U
1432.00	TRAPPER CR	UPPER PRIEST L	HEADWATERS	1	1	U	U	U
1433.00	HUGHES FORK	PRIEST R, UPPER	HEADWATERS	1	1	2	U	3

17010301 COUER D'ALENE RIVER (ABOVE SOUTH FORK)

SEGMENT #	STREAM SEGMENT	LOWER BOUNDARY	UPPER BOUNDARY	RESIDENT FISH	WILDLIFE	CULTURAL	NATURAL FEATURES	RECREATION
1481.00	COEUR D'ALENE R	COEUR D'ALENE R, SFK	YELLOW DOG CR	1	2	2	U	2
1482.00	COEUR D'ALENE R	YELLOW DOG CR	TEEPEE CR	1	2	3	1	3
1482.01	MINERS CR	COEUR D'ALENE R	HEADWATERS	U	3	U	U	U
1482.02	BRETT CR	COEUR D'ALENE R	HEADWATERS	U	3	U	U	U
1483.00	COEUR D'ALENE R	TEEPEE CR	HEADWATERS	1	1	3	3	2
1484.00	COEUR D'ALENE R, N FK	COEUR D'ALENE R	LAVERNE CR	1	2	2	U	3
1485.00	COEUR D'ALENE R, N FK	LAVERNE CR	HEADWATERS	2	2	2	U	3
1486.00	BUMBLEBEE CR	COEUR D'ALENE R, NFK	HEADWATERS	2	2	3	U	U
1487.00	COPPER CR	COEUR D'ALENE R, NFK	HEADWATERS	2	2	4	U	U
1488.00	LAVERNE CR	COEUR D'ALENE R, NFK	HEADWATERS	2	2	3	U	U
1489.00	LEBIERG CR	COEUR D'ALENE R, NFK	HEADWATERS	2	2	2	U	U
1490.00	SKOOKUM CR	COEUR D'ALENE R, NFK	HEADWATERS	2	2	2	U	U
1491.00	DECEPTION CR	COEUR D'ALENE R, NFK	HEADWATERS	U	3	3	1	U
1492.00	BURNT CABIN CR	COEUR D'ALENE R, NFK	HEADWATERS	2	3	3	U	U
1493.00	IRON CR	COEUR D'ALENE R, NFK	HEADWATERS	U	3	3	U	U
1494.00	COUGAR GULCH CR	COEUR D'ALENE R	HEADWATERS	1	3	4	U	U
1495.00	STEAMBOAT CR	COEUR D'ALENE R	HEADWATERS	2	3	2	U	3
1496.00	GRAHAM CR	COEUR D'ALENE R	HEADWATERS	2	2	U	U	U
1497.00	GRIZZLY CR	COEUR D'ALENE R	HEADWATERS	2	2	U	U	U
1498.00	BROWN CR	COEUR D'ALENE R	HEADWATERS	2	2	U	U	U
1499.00	BEAVER CR	COEUR D'ALENE R	HEADWATERS	2	4	2	U	U
1500.00	PRITCHARD CR	COEUR D'ALENE R	HEADWATERS	3	1	2	U	4
1501.00	EAGLE CR	PRITCHARD CR	HEADWATERS	3	1	U	U	U
1502.00	EAGLE CR, W FK	EAGLE CR	HEADWATERS	2	1	U	1	3
1503.00	LOST CR	COEUR D'ALENE R	HEADWATERS	2	1	3	U	3
1504.00	SHOSHONE CR	COEUR D'ALENE R	HEADWATERS	1	1	2	1	3
1504.01	FALLS CR	SHOSHONE CR	HEADWATERS	U	1	U	U	U
1505.00	DOWNEY CR	COEUR D'ALENE R	HEADWATERS	U	2	4	U	U
1506.00	YELLOW DOG CR	COEUR D'ALENE R	HEADWATERS	U	2	3	U	U
1507.00	FLAT CR	COEUR D'ALENE R	HEADWATERS	U	2	3	U	U
1508.00	TEEPEE CR	COEUR D'ALENE R	HEADWATERS	1	2	1	U	3
1509.00	INDEPENDENCE CR	TEEPEE CR	HEADWATERS	1	2	U	U	3
1510.00	TRAIL CR	TEEPEE CR	HEADWATERS	U	2	3	U	U
1511.00	ELK CR, BIG	TEEPEE CR	HEADWATERS	U	2	3	U	U
1512.00	JORDAN CR	COEUR D'ALENE R	HEADWATERS	1	1	3	U	U

17010302 S.FK.COUER D'ALENE R (ENTIRE DRAINAGE)

SEGMENT #	STREAM SEGMENT	LOWER BOUNDARY	UPPER BOUNDARY	RESIDENT FISH	WILDLIFE	CULTURAL	NATURAL FEATURES	RECREATION
1515.00	COEUR D'ALENE R, S FK	COEUR D'ALENE R	OSBORNE (TOWN)	3	2	3	U	4
1516.00	COEUR D'ALENE R, S FK	OSBORNE (TOWN)	MULLAN (TOWN)	3	2	U	U	U
1517.00	COEUR D'ALENE R, S FK	MULLAN (TOWN)	HEADWATERS	2	3	U	3	U
1518.00	BEAR CR	COEUR D'ALENE R, SFK	HEADWATERS	2	3	U	U	U
1519.00	PINE CR	COEUR D'ALENE R, SFK	HEADWATERS	3	2	U	2	U
1520.00	PINE CR, E FK	COEUR D'ALENE R, SFK	HEADWATERS	3	2	U	U	U
1521.00	BIG CR	COEUR D'ALENE R, SFK	HEADWATERS	U	2	3	U	U
1522.00	KNUCKLES CR	COEUR D'ALENE R, SFK	HEADWATERS	U	3	U	U	U
1523.00	PLACER CR	COEUR D'ALENE R, SFK	HEADWATERS	3	2	1	U	U
1524.00	NINEMILE CR	COEUR D'ALENE R, SFK	HEADWATERS	4	3	3	U	U
1525.00	CANYON CR	COEUR D'ALENE R, SFK	HEADWATERS	4	3	2	U	U
1526.00	COEUR D'ALENE R, S FK L N FK	COEUR D'ALENE R, SFK	HEADWATERS	2	2	U	U	U

17010303 COUER D'ALENE RIVER (BELOW S.FK.-INCLUDES LAKE TRIB)

SEGMENT #	STREAM SEGMENT	LOWER BOUNDARY	UPPER BOUNDARY	RESIDENT FISH	WILDLIFE	CULTURAL	NATURAL FEATURES	RECREATION
1529.00	COEUR D' ALENE R	COEUR D'ALENE L	COEUR D'ALENE R, SFK	1	1	1	2	1
1530.00	THOMPSON CR	COEUR D'ALENE R	HEADWATERS	3	3	U	U	U
1531.00	WILLOW CR	COEUR D'ALENE R	HEADWATERS	2	3	4	U	U
1532.00	EVANS CR	COEUR D'ALENE R	HEADWATERS	2	3	2	U	U
1533.00	FORTIER CR	KILARNEY L	HEADWATERS	3	3	2	U	U
1534.00	4TH OF JULY CR	COEUR D'ALENE R	HEADWATERS	1	2	2	U	U
1535.00	LATOUR CR	COEUR D'ALENE R	HEADWATERS	2	2	U	U	3
1536.00	SKEEL GULCH CR	COEUR D'ALENE R	HEADWATERS	2	3	U	U	U
1537.00	FRENCH GULCH CR	COEUR D'ALENE R	HEADWATERS	2	3	U	1	U
1538.00	CARLIN CR	COEUR D'ALENE L	HEADWATERS	U	3	3	U	U
1539.00	TURNER CR	COEUR D'ALENE L	HEADWATERS	U	3	U	U	U
1540.00	BEAUTY CR	COEUR D'ALENE L	HEADWATERS	U	1	2	U	U
1541.00	WOLF LODGE CR	COEUR D'ALENE L	HEADWATERS	1	1	3	U	U
1542.00	CEDAR CR	WOLF LODGE CR	HEADWATERS	1	2	3	U	3
1543.00	FERNAN CR	COEUR D'ALENE L	FERNAN L	1	3	U	U	U
1544.00	FERNAN CR	FERNAN L	HEADWATERS	2	3	3	U	U
1545.00	COUGAR CR	COEUR D'ALENE L	HEADWATERS	2	2	U	U	U
1546.00	KID CR	COEUR D'ALENE L	HEADWATERS	2	3	U	U	U
1547.00	MICA CR	COEUR D'ALENE L	HEADWATERS	2	3	U	U	U
1548.00	ROCKFORD CR	COEUR D'ALENE L	HEADWATERS	2	3	U	U	U
1549.00	LAKE CR	COEUR D'ALENE L	HEADWATERS	2	3	U	U	U

17010304 ST JOE RIVER (ENTIRE DRAINAGE)

SEGMENT #	STREAM SEGMENT	LOWER BOUNDARY	UPPER BOUNDARY	RESIDENT FISH	WILDLIFE	CULTURAL	NATURAL FEATURES	RECREATION
1574.00	ST JOE R	MOUTH	ROCHET CR	1	1	3	1	2
1575.00	ST JOE R	ROCHET CR	ST JOE R, N FK	1	2	1	2	2

17010304 ST JOE RIVER (ENTIRE DRAINAGE) [Cont.]

SEGMENT #	STREAM SEGMENT	LOWER BOUNDARY	UPPER BOUNDARY	RESIDENT FISH	WILDLIFE	CULTURAL	NATURAL FEATURES	RECREATION
1576.00	ST JOE R	ST JOE R, N FK	HEADWATERS (EXEMPT)	U	U	U	2	U
1577.00	PLUMMER CR	CHATCOLET L	HEADWATERS	U	3	U	1	U
1578.00	BENEWAH CR	CHATCOLET L	HEADWATERS	U	2	U	U	U
1579.00	ST MARIES R	ST JOE R	MASHBURN (TOWN)	U	3	U	1	1
1580.00	ST MARIES R	MASHBURN (TOWN)	CLARKIA (TOWN)	1	3	3	1	3
1581.00	ST MARIES R	CLARKIA (TOWN)	HEADWATERS	U	2	4	1	U
1582.00	THORN CR	ST MARIES R	HEADWATERS	U	3	U	U	U
1583.00	ALDER CR	ST MARIES R	HEADWATERS	U	3	U	U	U
1584.00	JOHN CR	ST MARIES R	HEADWATERS	U	3	U	U	U
1585.00	SANTA CR	ST MARIES R	HEADWATERS	U	3	U	U	U
1586.00	BEAVER CR	ST MARIES R	HEADWATERS	U	3	U	U	U
1587.00	CHARLIE CR	SANTA CR	HEADWATERS	U	3	U	U	U
1588.00	RENFRO CR	ST MARIES R	HEADWATERS	U	3	U	U	U
1589.00	TYSEN CR	ST MARIES R	HEADWATERS	U	3	U	U	U
1590.00	CRYSTAL CR	ST MARIES R	HEADWATERS	U	3	4	U	U
1591.00	CARPENTER CR	ST MARIES R	HEADWATERS	U	3	3	U	U
1592.00	OLSEN CR	ST MARIES R	HEADWATERS	U	3	U	U	U
1593.00	EMERALD CR	ST MARIES R	HEADWATERS	U	3	U	1	U
1594.00	ST MARIES R, M FK	ST MARIES R	HEADWATERS	U	2	2	2	4
1595.00	MERRY CR	ST MARIES R, M FK	HEADWATERS	U	3	3	U	U
1596.00	GOLD CENTER CR	ST MARIES R, M FK	HEADWATERS	U	3	3	U	U
1597.00	ST MARIES R, W FK	ST MARIES R, M FK	HEADWATERS	U	3	4	U	4
1597.01	CATSPUR CR	ST MARIES R	HEADWATERS	2	3	U	U	U
1598.00	BOND CR	ST JOE R	HEADWATERS	2	3	2	U	U
1599.00	TROUT CR	ST JOE R	HEADWATERS	1	2	U	U	U
1600.00	HUGUS CR	ST JOE R	HEADWATERS	U	3	U	U	U
1601.00	MICA CR	ST JOE R	HEADWATERS	1	3	3	U	U
1602.00	BIG CR	ST JOE R	HEADWATERS	1	2	U	U	3
1603.00	BLACK PRINCE CR	ST JOE R	HEADWATERS	U	3	U	U	U
1604.00	MARBLE CR	ST JOE R	HOBO CR	1	2	1	2	3
1604.01	DAVEGGIO CR	MARBLE CR	HEADWATERS	1	3	U	U	3
1604.02	EAGLE CR	MARBLE CR	HEADWATERS	1	3	U	U	U
1604.03	NORTON CR	MARBLE CR	HEADWATERS	1	3	U	U	U
1605.00	MARBLE CR	HOBO CR	HEADWATERS	1	3	1	1	3
1605.01	HOMESTEAD CR	MARBLE CR	HEADWATERS	1	3	U	U	U
1606.00	SLATE CR	ST JOE R	HEADWATERS	1	2	3	2	3
1607.00	FLEMING CR	ST JOE R	HEADWATERS	U	3	U	U	U
1608.00	FISHHOOK CR	ST JOE R	HEADWATERS	2	3	3	1	U
1609.00	ST JOE R, N FK	ST JOE R	HEADWATERS	1	2	1	U	3
1610.00	LOOP CR	ST JOE R, N FK	HEADWATERS	1	3	1	U	3
1611.00	SIWASH CR	ST JOE R	HEADWATERS	1	3	4	U	U
1612.00	SKOOKUM CR	ST JOE R	HEADWATERS	1	2	3	U	U
1613.00	SISTERS CR	ST JOE R	HEADWATERS	1	3	U	U	U
1614.00	BIRD CR	ST JOE R	HEADWATERS	1	3	3	U	U
1615.00	PROSPECTOR CR	ST JOE R	HEADWATERS	1	2	4	2	U
1616.00	NUGGET CR	ST JOE R	HEADWATERS	1	3	4	U	U
1617.00	EAGLE CR	ST JOE R	HEADWATERS	1	3	3	2	U
1618.00	QUARTZ CR	ST JOE R	HEADWATERS	1	3	4	U	U
1619.00	BLUFF CR	ST JOE R	HEADWATERS	1	3	3	U	U

17010304 ST JOE RIVER (ENTIRE DRAINAGE) [Cont.]

SEGMENT #	STREAM SEGMENT	LOWER BOUNDARY	UPPER BOUNDARY	RESIDENT FISH	WILDLIFE	CULTURAL	NATURAL FEATURES	RECREATION
1620.00	BRUIN CR	ST JOE R	HEADWATERS	1	3	4	U	U
1621.00	MOSQUITO CR	ST JOE R	HEADWATERS	1	3	4	U	U
1622.00	GOLD CR	ST JOE R	HEADWATERS	1	3	3	U	U
1623.00	SIMMONS CR	ST JOE R	HEADWATERS	1	3	3	U	U
1624.00	FLY CR	ST JOE R	HEADWATERS	1	3	U	U	U
1625.00	BEAVER CR	ST JOE R	HEADWATERS	1	2	U	U	U
1626.00	COPPER CR	ST JOE R	HEADWATERS	1	2	U	U	U
1627.00	RED IVES CR	ST JOE R	HEADWATERS	1	2	U	U	U
1628.00	TIMBER CR	ST JOE R	HEADWATERS	1	2	U	U	U
1629.00	BEAN CR	ST JOE R	HEADWATERS	1	2	U	U	U

17010305 SPOKANE RIVER (ENTIRE DRAINAGE)

SEGMENT #	STREAM SEGMENT	LOWER BOUNDARY	UPPER BOUNDARY	RESIDENT FISH	WILDLIFE	CULTURAL	NATURAL FEATURES	RECREATION
1552.00	SPOKANE R	WASHINGTON LINE	POST FALLS BRIDGE	1	1	U	U	2
1553.00	SPOKANE R	POST FALLS BRIDGE	HUETER (TOWN)	2	1	U	U	U
1554.00	SPOKANE R	HUETER (TOWN)	COEUR D'ALENE L	1	1	4	U	U
1555.00	HAYDEN CR	HAYDEN L	HEADWATERS	1	3	2	U	U
1556.00	NILSEN CR	HAYDEN L	HEADWATERS	U	3	U	U	U
1557.00	MOKINS CR	HAYDEN L	HEADWATERS	1	3	2	U	U
1558.00	JIM CR	HAYDEN L	HEADWATERS	U	3	3	U	U
1559.00	YELLOWBANKS CR	HAYDEN L	HEADWATERS	1	3	4	U	U
1560.00	RATHDRUM CR	TWIN LAKES	RATHDRUM (TOWN)	2	4	U	U	U
1561.00	FISH CR	TWIN LAKES	WASHINGTON LINE	U	3	U	U	U
1562.00	HAUSER LAKE CR	LOWER REACHES	HAUSER L	U	4	0	U	U

17010306 LITTLE SPOKANE RIVER (WA LINE TO HW)

SEGMENT #	STREAM SEGMENT	LOWER BOUNDARY	UPPER BOUNDARY	RESIDENT FISH	WILDLIFE	CULTURAL	NATURAL FEATURES	RECREATION
1565.00	HANGMAN CR	WASHINGTON LINE	DESMET (TOWN)	4	4	U	U	U
1566.00	HANGMAN CR	DESMET (TOWN)	HEADWATERS	U	4	U	U	U
1567.00	HANGMAN CR, LITTLE	WASHINGTON LINE	HEADWATERS	U	4	U	U	U
1568.00	MOCTILEME CR	WASHINGTON LINE	HEADWATERS	U	4	U	U	U
1569.00	LOLO CR	HANGMAN CR	HEADWATERS	U	4	U	U	U
1570.00	MISSION CR	HANGMAN CR	HEADWATERS	U	3	U	U	U
1571.00	ROCK CR, N FK	WASHINGTON LINE	HEADWATERS	U	3	U	U	U

17040104 SO FK SNAKE RIVER (ABOVE HEISE)

SEGMENT #	STREAM SEGMENT	LOWER BOUNDARY	UPPER BOUNDARY	RESIDENT FISH	WILDLIFE	CULTURAL	NATURAL FEATURES	RECREATION
3.00	SNAKE R, S FK	HEISE	IRWIN	1	1	1	1	1
4.00	SNAKE R, S FK	IRWIN	PALISADES DAM	1	1	3	U	2
5.00	PALISADES RES			2	1	U	2	U
6.00	ANTELOPE CR	SNAKE R, S FK	HEADWATERS	4	2	U	U	U
7.00	BURNS CR	SNAKE R, S FK	HEADWATERS	1	1	U	U	U
8.00	BLACK CANYON CR	SNAKE R, S FK	HEADWATERS	2	1	U	2	U
9.00	PINE CR	SNAKE R, S FK	HEADWATERS	1	1	3	U	2
10.00	PRITCHARD CR	SNAKE R, S FK	HEADWATERS	1	2	4	U	U
11.00	FALL CR	SNAKE R, S FK	HEADWATERS	2	1	U	3	2
12.00	RAINEY CR	FOREST BOUNDARY	HEADWATERS	1	1	U	U	2
12.10	RAINEY CR	SNAKE R, S FK	FOREST BOUNDARY	2	1	U	U	U
13.00	INDIAN CR	SNAKE R, S FK	HEADWATERS	U	2	4	U	U
14.00	PALISADES CR	SNAKE R, S FK	HEADWATERS	1	1	U	3	1
15.00	BEAR CR	PALISADES RES	HEADWATERS	1	2	2	U	3
16.00	LITTLE ELK CR	PALISADES RES	HEADWATERS	U	1	U	U	3
17.00	BIG ELK CR	PALISADES RES	HEADWATERS	1	1	U	1	3
18.00	INDIAN CR	PALISADES RES	HEADWATERS	1	1	U	U	3
19.00	MCCOY CR	PALISADES RES	IOWA CR	1	1	U	U	3
19.10	MCCOY CR	IOWA CR	HEADWATERS	2	1	U	U	U
20.00	FISH CR	MCCOY CR	HEADWATERS	U	1	U	U	U
21.00	IOWA CR	MCCOY CR	HEADWATERS	1	2	U	U	U
22.00	WOLVERINE CR	MCCOY CR	HEADWATERS	U	2	U	U	U
23.00	TROUT CR	PALISADES RES	HEADWATERS	1	1	U	U	U

17040105 SALT RIVER (TO WYOMING BORDER)

SEGMENT #	STREAM SEGMENT	LOWER BOUNDARY	UPPER BOUNDARY	RESIDENT FISH	WILDLIFE	CULTURAL	NATURAL FEATURES	RECREATION
220.00	JACKNIFE CR	SALT R	HEADWATERS	1	1	U	U	U
221.00	TINCUP CR	SALT R	HEADWATERS	2	1	U	U	U
222.00	STUMP CR	SALT R	HEADWATERS	1	1	2	U	U
223.00	TYGEE CR	STUMP CR	HEADWATERS	2	1	3	U	U
224.00	HORSE CR	STUMP CR	HEADWATERS	1	1	U	1	U
225.00	CROW CR	WYOMING LINE	HEADWATERS	1	1	U	1	U
226.00	DEER CR	CROW CR	HEADWATERS	1	1	U	U	U
227.00	SAGE CR	CROW CR	HEADWATERS	1	1	3	U	U

17040201 SNAKE RIVER (SHELLY(WOODVILLE) TO HEISE)

SEGMENT #	STREAM SEGMENT	LOWER BOUNDARY	UPPER BOUNDARY	RESIDENT FISH	WILDLIFE	CULTURAL	NATURAL FEATURES	RECREATION
26.00	SNAKE R	WOODVILLE	SNAKE R, S FK	2	1	1	1	3
27.00	SNAKE R, S FK	MOUTH	HEISE	1	1	2	2	2
28.00	GREAT WESTERN CANAL	WOODVILLE	HEADGATE	U	4	U	U	U
29.00	ANNIS SLOUGH	SNAKE R	LORENZO	U	4	U	U	U

17040201 SNAKE RIVER (SHELLY(WOODVILLE) TO HEISE) [Cont.]

SEGMENT #	STREAM SEGMENT	LOWER BOUNDARY	UPPER BOUNDARY	RESIDENT FISH	WILDLIFE	CULTURAL	NATURAL FEATURES	RECREATION
30.00	DRY BED	SNAKE R	HEADGATE	2	4	U	U	U
31.00	BURGESS CANAL	SNAKE R	DRY BED	U	4	U	U	U
32.00	BIRCH CR	LOWER REACHES	HEADWATERS	4	4	U	U	U

17040202 HENRY'S FORK (ABOVE ASHTON)

SEGMENT #	STREAM SEGMENT	LOWER BOUNDARY	UPPER BOUNDARY	RESIDENT FISH	WILDLIFE	CULTURAL	NATURAL FEATURES	RECREATION
75.00	ASHTON RES			3	1	U	1	U
76.00	HENRYS FORK	ASHTON RES	MESA FALLS	1	1	3	1	1
77.00	HENRYS FORK	MESA FALLS	R42ET11N,S23-24	1	1	4	1	1
78.00	HENRYS FORK	R42ET11N,S23-24	ISLAND PARK RES	1	1	2	1	1
79.00	ISLAND PARK RES			1	1	U	1	U
80.00	HENRYS FORK	ISLAND PARK RES	HENRYS LK OUTL	1	1	2	U	1
81.00	HENRYS FORK	HENRYS LK OUTL	BIG SPRINGS	1	1	1	1	2
82.00	WARM R	HENRYS FK	WARM R SPRINGS	1	1	2	1	U
83.00	WARM R	WARM R SPRINGS	HEADWATERS	2	1	2	1	2
84.00	ROBINSON CR	WARM R	YELLOWSTONE NP	1	1	4	1	2
85.00	FISH CR	ROBINSON CR	HEADWATERS	2	1	3	1	U
86.00	PORCUPINE CR	ROBINSON CR	HEADWATERS	3	1	2	U	3
87.00	ROCK CR	PORCUPINE CR	YELLOWSTONE NP	2	1	3	U	U
88.00	WYOMING CR	ROCK CR	WYOMING LINE	2	1	U	U	U
89.00	SNOW CR	ROBINSON CR	HEADWATERS	2	1	4	1	U
90.00	MOOSE CR	WARM R	HEADWATERS	U	1	4	1	3
91.00	PARTRIDGE CR	WARM R	HEADWATERS	U	1	4	1	U
92.00	THURMAN CR	HENRYS FK	HEADWATERS	U	1	2	1	U
93.00	BUFFALO R	HENRYS FK	CHICK CR	1	1	3	U	2
94.00	TOMS CR	BUFFALO R	HEADWATERS	U	1	4	U	U
95.00	ELK CR	BUFFALO R	HEADWATERS	U	1	4	U	U
96.00	SHERIDAN CR	ISLAND PARK RES	HEADWATERS	U	1	2	U	U
97.00	SHERIDAN RES			U	1	U	U	U
98.00	WILLOW CR	SHERIDAN CR	HEADWATERS	U	1	2	U	U
99.00	ICEHOUSE CR	ISLAND PARK RES	HEADWATERS	U	1	2	U	U
100.00	SHEEP CR	ISLAND PARK RES	HEADWATERS	U	1	U	U	U
101.00	BLUE CR	ISLAND PARK RES	HEADWATERS	U	1	2	U	U
102.00	HOTEL CR	ISLAND PARK RES	HEADWATERS	U	1	2	U	U
103.00	YALE CR	HOTEL CR	HEADWATERS	U	1	2	U	U
104.00	MOOSE CR	HENRYS FK	HEADWATERS	2	1	U	U	U
105.00	HENRYS LK OUTLET	HENRYS FK	HENRYS LK DAM	2	1	U	3	U
106.00	HENRYS LK			1	1	U	U	U
107.00	HOWARD CR	HENRYS LK	HEADWATERS	1	1	2	U	U
108.00	TARGHEE CR	HENRYS LK	HEADWATERS	1	1	U	1	U
109.00	TIMBER CR	HENRYS LK	HEADWATERS	1	1	U	U	U
110.00	DUCK CR	HENRYS LK	HEADWATERS	1	1	U	U	U

17040203 HENRY'S FORK (BELOW ASHTON)

SEGMENT #	STREAM SEGMENT	LOWER BOUNDARY	UPPER BOUNDARY	RESIDENT FISH	WILDLIFE	CULTURAL	NATURAL FEATURES	RECREATION
60.00	HENRYS FORK	MOUTH	WARM SLOUGH	2	1	2	1	1
61.00	HENRYS FORK	WARM SLOUGH	ST ANTHONY	2	1	3	1	1
62.00	HENRYS FORK	ST ANTHONY	ASHTON DAM	1	1	3	U	1
63.00	BANNOCK JIM SLOUGH	HENRYS FK	SNAKE R, S FK	U	1	U	U	U
64.00	TEXAS SLOUGH	HENRYS FK	SNAKE R, S FK	U	1	U	U	U
65.00	FALLS R	HENRYS FK	CONANT CR	1	1	3	3	2
65.10	FALLS R	CONANT CR	HEADWATERS	1	1	U	U	1
66.00	CONANT CR	FALLS R	FOREST BOUNDARY	3	1	3	U	U
66.10	CONANT CR	FOREST BOUNDARY	HEADWATERS	2	1	U	U	U
67.00	SQUIRREL CR	CONANT CR	WYOMING LINE	2	1	3	U	U
68.00	BOONE CR	FALLS R	WYOMING LINE	2	1	4	U	U
69.00	SAND CR	HENRYS FK	HEADWATERS	2	1	U	1	U
70.00	ARCADIA RES			U	1	U	U	U
71.00	SAND CR RES			2	1	U	U	U
72.00	BLACK SPRINGS CR	HENRYS FK	HEADWATERS	U	1	U	U	U

17040204 TETON RIVER (ENTIRE DRAINAGE)

SEGMENT #	STREAM SEGMENT	LOWER BOUNDARY	UPPER BOUNDARY	RESIDENT FISH	WILDLIFE	CULTURAL	NATURAL FEATURES	RECREATION
113.00	TETON R, N & S FK	HENRYS FK	TETON FKS	2	1	U	U	U
114.00	TETON R	TETON FKS	TETON DAM SITE	2	1	U	3	3
115.00	TETON R	TETON DAM SITE	BITCH CR	2	1	U	3	2
116.00	TETON R	BITCH CR	HIGHWAY 33	1	1	U	U	2
117.00	TETON R	HIGHWAY 33	TRAIL CR	2	2	U	U	U
118.00	TETON R	TRAIL CR	HEADWATERS	U	2	U	3	U
119.00	MOODY CR	TETON R, S FK	FOREST BOUNDARY	2	2	U	3	U
120.00	MOODY CR	FOREST BOUNDARY	HEADWATERS	1	2	2	3	U
121.00	CANYON CR	TETON R	PINCOCK HOT SPG	1	2	3	2	U
122.00	CANYON CR	PINCOCK HOT SPG	HEADWATERS	1	2	2	2	U
123.00	BITCH CR	TETON R	WYOMING LINE	1	2	U	U	2
124.00	BADGER CR	TETON R	FIRST TRIBUTARY	1	2	U	U	4
125.00	BADGER CR	FIRST TRIBUTARY	R45ET6NS10	U	2	U	U	4
126.00	BADGER CR	R45ET6NS10	WYOMING LINE	1	2	U	U	U
127.00	SPRING CR	TETON R	WYOMING LINE	U	2	U	U	U
128.00	LEIGH CR, S	TETON R	HEADWATERS	U	2	U	U	U
129.00	PACKSADDLE CR	TETON R	HEADWATERS	1	2	2	U	U
130.00	HORSESHOE CR	TETON R	HEADWATERS	U	2	2	U	U
131.00	MAHOGANY CR	TETON R	HEADWATERS	U	2	U	U	U
132.00	TETON CR	TETON R	HIGHWAY 33	1	2	U	U	U
133.00	TETON CR	HIGHWAY 33	WYOMING LINE	U	2	U	U	U
134.00	DARBY CR	TETON R	HIGHWAY 33	U	2	U	U	U
135.00	DARBY CR	HIGHWAY 33	WYOMING LINE	U	2	U	U	U
136.00	FOX CR	TETON R	WYOMING LINE	U	2	U	U	U
137.00	TRAIL CR	TETON R	HEADWATERS	U	2	U	U	3

17040205 WILLOW CREEK (ENTIRE DRAINAGE)

SEGMENT #	STREAM SEGMENT	LOWER BOUNDARY	UPPER BOUNDARY	RESIDENT FISH	WILDLIFE	CULTURAL	NATURAL FEATURES	RECREATION
35.00	WILLOW CR		RIRIE DAM	3	2	U	3	2
36.00	RIRIE RES			1	2	U	U	U
37.00	WILLOW CR	RIRIE RES	GRAYS LK OUTLET	2	2	2	3	2
38.00	WILLOW CR	GRAYS LK OUTLET	CELLARS CR	2	2	U	U	2
39.00	WILLOW CR	CELLARS CR	HEADWATERS	2	2	U	3	2
40.00	MEADOW CR	RIRIE RES	HEADWATERS	3	2	U	U	U
41.00	TEX CR	WILLOW CR	HEADWATERS	2	2	U	U	U
42.00	BIRCH CR	WILLOW CR	HEADWATERS	3	2	U	U	U
43.00	GRAYS LAKE OUTLET	WILLOW CR	FALLS R42ET35S3	2	1	U	3	U
44.00	GRAYS LAKE OUTLET	ABOVE FALLS	GRAYS LK	3	1	U	1	U
45.00	HELL CR	GRAYS LK OUTLET	HEADWATERS	2	2	U	U	U
46.00	LAVA CR	GRAYS LK OUTLET	HEADWATERS	2	2	U	U	U
47.00	BROCKMAN CR	GRAYS LK OUTLET	HEADWATERS	2	2	3	3	U
48.00	CORRAL CR	BROCKMAN CR	HEADWATERS	2	2	4	U	U
49.00	SAWMILL CR	BROCKMAN CR	HEADWATERS	2	2	4	U	U
50.00	HOMER CR	GRAYS LK OUTLET	HEADWATERS	3	2	U	U	U
51.00	CELLARS CR	WILLOW CR	HEADWATERS	2	2	0	U	U
52.00	MUD CR	WILLOW CR	HEADWATERS	U	2	U	U	U
53.00	LONG VALLEY CR	WILLOW CR	HEADWATERS	3	2	U	U	U
54.00	MILL CR	WILLOW CR	HEADWATERS	2	2	U	U	U
55.00	HANCOCK CR	WILLOW CR	HEADWATERS	3	2	U	U	U
56.00	CRANES CR	WILLOW CR	HEADWATERS	2	2	U	U	U
57.00	SEVENTY CR	WILLOW CR	HEADWATERS	3	2	U	U	U

17040206 SNAKE RIVER (AF DAM TO WOODVILE)

SEGMENT #	STREAM SEGMENT	LOWER BOUNDARY	UPPER BOUNDARY	RESIDENT FISH	WILDLIFE	CULTURAL	NATURAL FEATURES	RECREATION
346.00	AMERICAN FALLS RES			3	1	U	U	U
347.00	SNAKE R	AMERICAN FALLS RES	FERRY BUTTE	1	1	1	U	3
348.00	SNAKE R	FERRY BUTTE	BONNEVILLE COUNTY LN	2	1	3	3	3
349.00	BANNOCK CR	AMERICAN FALLS RES	HEADWATERS	4	4	U	U	U
349.01	MOONSHINE CR	BANNOCK CR	HEADWATERS	U	U	U	U	U
349.02	BANNOCK CR, W FK	BANNOCK CR	HEADWATERS	1	2	U	U	U
350.00	RATTLESNAKE CR	BANNOCK CR	HEADWATERS	2	2	U	U	U
351.00	MICHAUD CR	LOWER REACHES	HEADWATERS	U	4	U	U	U
352.00	SPRING CR	AMERICAN FALLS RES	HEADWATERS	1	U	U	U	U
353.00	CLEAR CR	AMERICAN FALLS RES	HEADWATERS	1	U	U	U	U
354.00	ROSS FORK CR	AMERICAN FALLS RES	PUTNAM NARROWS	3	U	U	U	U
354.10	ROSS FORK CR	PUTNAM NARROWS	HEADWATERS	1	4	U	U	U
355.00	BIG JIMMY CR	AMERICAN FALLS RES	HEADWATERS	1	U	U	U	U
356.00	MCTUCKER CR	SNAKE R	HEADWATERS	1	1	U	U	U
356.01	JEFF CABIN CR	SNAKE R	HEADWATERS	2	U	U	U	U

17040207 BLACKFOOT RIVER (ENTIRE DRAINAGE)

SEGMENT #	STREAM SEGMENT	LOWER BOUNDARY	UPPER BOUNDARY	RESIDENT FISH	WILDLIFE	CULTURAL	NATURAL FEATURES	RECREATION
302.00	BLACKFOOT R	SNAKE R	MAIN CANAL	3	1	U	3	2
302.01	LINCOLN CR	BLACKFOOT R	HEADWATERS	U	U	U	U	U
302.10	BLACKFOOT R	MAIN CANAL	WOLVERINE CR	2	1	U	U	U
303.00	BLACKFOOT R	WOLVERINE CR	BLACKFOOT DAM	1	1	U	3	2
304.00	BLACKFOOT RES			2	1	U	3	U
305.00	BLACKFOOT R	BLACKFOOT RES	HEADWATERS	1	1	3	1	3
306.00	WOLVERINE CR	BLACKFOOT R	HEADWATERS	1	2	U	U	U
307.00	RAWLINS CR	BLACKFOOT R	HEADWATERS	2	2	U	U	U
308.00	GRAVES CR	BLACKFOOT R	HEADWATERS	U	2	U	U	U
309.00	CORRAL CR	BLACKFOOT R	HEADWATERS	3	2	U	3	U
310.00	MEADOW CR	BLACKFOOT RES	HEADWATERS	3	1	U	U	U
311.00	TRAIL CR	BLACKFOOT R	HEADWATERS	1	3	4	1	U
311.01	WOOLEY VALLEY CR	BLACKFOOT R	HEADWATERS	1	3	U	U	U
312.00	SLUG CR	BLACKFOOT R	HEADWATERS	1	1	4	U	U
313.00	ANGUS CR	BLACKFOOT R	HEADWATERS	1	2	3	U	U
314.00	DRY VALLEY CR	BLACKFOOT R	HEADWATERS	1	4	3	U	U
315.00	DIAMOND CR	BLACKFOOT R	HEADWATERS	1	1	2	U	U
316.00	BACON CR	DIAMOND CR	HEADWATERS	1	2	U	U	U
317.00	TIMOTHY CR	DIAMOND CR	HEADWATERS	1	2	U	U	U
318.00	CABIN CR	LANES CR	HEADWATERS	1	2	0	U	U
318.01	SPRING CR	BLACKFOOT R	HEADWATERS	1	3	U	U	U
319.00	KENDALL CR	DIAMOND CR	HEADWATERS	1	2	3	U	U
320.00	LANES CR	BLACKFOOT R	HEADWATERS	1	1	3	U	U
320.01	BROWNS CANYON CR	LANES CR	HEADWATERS	1	3	U	U	U
321.00	SHEEP CR	LANES CR	HEADWATERS	1	2	3	U	U

17040208 PORTNEUF RIVER (ENTIRE DRAINAGE)

SEGMENT #	STREAM SEGMENT	LOWER BOUNDARY	UPPER BOUNDARY	RESIDENT FISH	WILDLIFE	CULTURAL	NATURAL FEATURES	RECREATION
324.00	PORTNEUF R	AMERICAN FALLS RES	INTERSTATE 86	2	1	U	U	3
324.10	PORTNEUF R	INTERSTATE 86	JOHNY CR	4	4	U	U	3
324.20	PORTNEUF R	JOHNY CR	MARSH CR	3	3	U	U	U
325.00	PORTNEUF R	MARSH CR	DIVERSION,T9SR37ES22	3	3	U	1	3
326.00	PORTNEUF R	PVC DIVERSION	LAVA HOT SPRINGS	2	3	U	3	3
327.00	PORTNEUF R	LAVA HOT SPRINGS	CHESTERFIELD CANAL	1	3	U	1	U
328.00	PORTNEUF R	CHESTERFIELD CANAL	CHESTERFIELD RES	4	3	U	3	U
329.00	CHESTERFIELD RES			2	3	U	U	U
330.00	PORTNEUF R	CHESTERFIELD RES	HEADWATERS	2	3	U	3	U
331.00	POCATELLO CR	PORTNEUF R	HEADWATERS	U	4	U	U	U
332.00	GIBSON JACK CR	PORTNEUF R	HEADWATERS	1	2	U	1	U
333.00	MINK CR	PORTNEUF R	HEADWATERS	1	1	2	1	2
334.00	RAPID CR	PORTNEUF R	HEADWATERS	2	2	U	U	U
335.00	MARSH CR	PORTNEUF R	HEADWATERS	3	1	U	2	3
335.01	WALKER CR	MARSH CR	HEADWATERS	2	2	U	U	U
335.02	BELL MARSH CR	MARSH CR	HEADWATERS	1	2	U	U	U
335.03	GOODENOUGH CR	MARSH CR	HEADWATERS	2	2	U	U	U

17040208 PORTNEUF RIVER (ENTIRE DRAINAGE) [Cont.]

SEGMENT #	STREAM SEGMENT	LOWER BOUNDARY	UPPER BOUNDARY	RESIDENT FISH	WILDLIFE	CULTURAL	NATURAL FEATURES	RECREATION
336.00	GARDEN CR	BEGINNING	GARDEN CR GAP	2	2	U	U	U
336.10	GARDEN CR	GARDEN CR GAP	HEADWATERS	1	2	U	U	U
337.00	HAWKINS CR	MARSH CR	HEADWATERS	4	2	U	U	U
337.10	HAWKINS RES			2	4	U	U	U
338.00	BIRCH CR	MARSH CR	HEADWATERS	2	3	U	U	U
339.00	CHERRY CR	BIRCH CR	HEADWATERS	2	2	U	U	U
340.00	DEMPSEY CR	PORTNEUF R	HEADWATERS	1	3	U	U	U
341.00	PEBBLE CR	PORTNEUF R	HEADWATERS	1	1	4	U	U
342.00	TWENTYFOURMILE CR	PORTNEUF R	HEADWATERS	4	3	U	U	U
343.00	TOPONCE CR	PORTNEUF R	HEADWATERS	1	2	3	U	U

17040209 SNAKE RIVER (MILNER L. TO AF DAM)

SEGMENT #	STREAM SEGMENT	LOWER BOUNDARY	UPPER BOUNDARY	RESIDENT FISH	WILDLIFE	CULTURAL	NATURAL FEATURES	RECREATION
359.00	MILNER RES			3	1	U	3	U
360.00	SNAKE R	JACKSON BRIDGE	MINIDOKA DAM	1	1	2	U	3
361.00	LAKE WALCOTT			2	1	U	U	U
362.00	SNAKE R	LAKE WALCOTT	MASSACRE ROCKS	3	1	3	3	1
363.00	SNAKE R	MASSACRE ROCKS	EAGLE ROCK	3	1	1	3	1
363.10	SNAKE R	EAGLE ROCK	AMERICAN FALLS DAM	1	1	U	U	1
364.00	FALL CR	SNAKE R	HEADWATERS	3	3	U	U	U
365.00	ROCK CR	SNAKE R	HEADWATERS	4	3	1	3	U
366.00	ROCK CR, E FK	ROCK CR	HEADWATERS	2	1	U	U	U

17040210 RAFT RIVER (ENTIRE DRAINAGE)

SEGMENT #	STREAM SEGMENT	LOWER BOUNDARY	UPPER BOUNDARY	RESIDENT FISH	WILDLIFE	CULTURAL	NATURAL FEATURES	RECREATION
430.00	RAFT R	SNAKE R	MALTA	4	1	U	3	U
431.00	RAFT R	MALTA	UTAH LINE	3	1	U	1	3
432.00	SUBLETT CR	LOWER REACHES	2 MI BLW SUBLETT RES	4	2	U	U	U
433.00	SUBLETT CR	2 MI BLW SUBLETT RES	SUBLETT RES	2	2	U	U	3
434.00	SUBLETT RES			1	3	U	U	U
435.00	SUBLETT CR	SUBLETT RES	HEADWATERS	1	1	1	U	3
436.00	LAKE FORK CR	SUBLETT RES	HEADWATERS	2	1	4	U	U
437.00	FALL CR	LAKE FORK CR	HEADWATERS	2	1	4	U	U
438.00	CASSIA CR	RAFT R	HEADWATERS	2	2	U	1	3
439.00	CONNER CR	CASSIA CR	HEADWATERS	1	3	U	U	U
440.00	COTTONWOOD CR	CASSIA CR	HEADWATERS	2	3	U	1	U
441.00	CLEAR CR	LOWER REACHES	UTAH LINE	1	2	U	1	U
442.00	EDWARDS CR	RAFT R	HEADWATERS	U	3	U	3	U

7040211 GOOSE CREEK (ENTIRE DRAINAGE)

EGMENT #	STREAM SEGMENT	LOWER BOUNDARY	UPPER BOUNDARY	RESIDENT FISH	WILDLIFE	CULTURAL	NATURAL FEATURES	RECREATION
145.00	GOOSE CR	OAKLEY (TOWN)	OAKLEY RES	4	2	U	3	U
146.00	OAKLEY RES	OR GOOSE CREEK RES		3	2	U	U	U
147.00	GOOSE CR	OAKLEY RES	HEADWATERS	1	2	2	1	4
148.00	BIRCH CR	OAKLEY (TOWN)	HEADWATERS	2	3	U	U	U
149.00	TRAPPER CR	OAKLEY RES	HEADWATERS	2	2	2	1	3
150.00	FALL CR	TRAPPER CR	HEADWATERS	2	2	2	U	U
151.00	COTTONWOOD CR, BIG	T13SR21ES8	PICKETT HOLLOW	2	2	U	U	3
152.00	COTTONWOOD CR, BIG	PICKETT HOLLOW	HEADWATERS	1	2	3	U	3
153.00	SUMMIT CR	T13SR22ES35		2	3	U	U	U
154.00	MILL CR	T13SR22ES35		2	3	U	U	U
155.00	SPRING CR	MILL CR	HEADWATERS	2	3	U	U	U

7040212 SNAKE RIVER (KING HILL TO MILNER DAM)

GMENT #	STREAM SEGMENT	LOWER BOUNDARY	UPPER BOUNDARY	RESIDENT FISH	WILDLIFE	CULTURAL	NATURAL FEATURES	RECREATION
69.00	SNAKE R	KING HILL DAM	BLISS BRIDGE	1	1	2	1	2
70.00	BLISS RES			3	3	U	1	U
71.00	SNAKE R	BLISS RES	LWR SALMON FALLS DAM	1	1	2	1	2
72.00	L. SALMON FALLS RES			2	1	U	1	U
73.00	U. SALMON FALLS RES			1	1	U	1	U
74.00	SNAKE R	UPR SALMON FALLS RES	CRYSTAL SPRINGS	1	1	2	1	2
74.10	SNAKE R	CRYSTAL SPRINGS	SHOSHONE FALLS	1	1	U	U	U
75.00	SHOSHONE FALLS RES	SHOSHONE FALLS	TWIN FALLS DAM	3	3	U	1	U
76.00	TWIN FALLS RES			1	3	U	1	U
77.00	SNAKE R	TWIN FALLS RES	MURTAUGH	1	2	U	U	1
78.00	SNAKE R	MURTAUGH	MILNER DAM	U	1	2	1	1
79.00	CLOVER CR	SNAKE R	PIONEER RES	2	1	U	1	4
80.00	PIONEER RES			4	1	U	U	3
81.00	CLOVER CR	PIONEER RES	HEADWATERS	U	1	U	1	3
82.00	BANCROFT SPRINGS	SNAKE R	HEADWATERS	1	2	2	U	U
83.00	WHITE SPRINGS, LOWER	SNAKE R	HEADWATERS	2	3	3	U	U
84.00	BILLINGSLEY CR	SNAKE R	HEADWATERS	1	1	2	U	U
85.00	RILEY CR	SNAKE R	HEADWATERS	1	1	3	U	U
86.00	THOUSAND SPRINGS CR	SNAKE R	HEADWATERS	1	1	1	1	U
87.00	SAND SPRINGS CR	SNAKE R	HEADWATERS	1	1	4	U	U
88.00	BOX CANYON CR	SNAKE R	HEADWATERS	1	2	4	1	2
89.00	BLIND CANYON CR	SNAKE R	HEADWATERS	1	2	U	U	U
90.00	BANBURY SPRINGS	SNAKE R	HEADWATERS	1	1	2	3	U
91.00	BRIGGS SPRING CR	SNAKE R	HEADWATERS	1	1	4	1	U
92.00	DEEP CR	SNAKE R	HIGHLINE CANAL	1	1	U	U	U
93.00	DEEP CR	HIGHLINE CANAL	HEADWATERS	3	3	3	U	U
94.00	MUD CR	SNAKE R	HEADWATERS	2	3	U	2	U
95.00	CLEAR SPRINGS	SNAKE R	HEADWATERS	1	1	3	U	U
96.00	NIAGRA SPRINGS CR	SNAKE R	HEADWATERS	1	2	3	1	U
97.00	CEDAR DRAW CR	SNAKE R	HEADWATERS	2	3	3	U	U
98.00	CRYSTAL SPRINGS	SNAKE R	HEADWATERS	1	3	4	U	U

17040212 SNAKE RIVER (KING HILL TO MILNER DAM) [Cont.]

SEGMENT #	STREAM SEGMENT	LOWER BOUNDARY	UPPER BOUNDARY	RESIDENT FISH	WILDLIFE	CULTURAL	NATURAL FEATURES	RECREATION
399.00	ELLISON CR	SNAKE R	HEADWATERS	2	3	U	U	U
400.00	ROCK CR	SNAKE R	ROCK CREEK (TOWN)	1	3	1	U	3
401.00	ROCK CR	ROCK CREEK (TOWN)	HEADWATERS	1	2	2	U	3
402.00	ROCK CR, FIFTH FK	ROCK CR	HEADWATERS	1	2	3	U	U
403.00	COTTONWOOD CR	ROCK CR	HEADWATERS	2	2	2	3	U
404.00	MCMULLEN CR	COTTONWOOD CR	HEADWATERS	2	2	U	U	U
405.00	ALPHEUS CR	SNAKE R	HEADWATERS	2	3	0	U	U
406.00	DEVILS CORRAL CR	SNAKE R	HEADWATERS	2	2	U	1	3
407.00	VINYARD CR	SNAKE R	HEADWATERS	1	2	U	1	3
408.00	DRY CR	SNAKE R	MEDLEY CR	2	3	4	U	U
409.00	DRY CR	MEDLEY CR	HEADWATERS	1	3	3	U	U
410.00	DRY CR, E FK	DRY CR	HEADWATERS	1	3	3	U	U
411.00	DRY CR, W FK	DRY CR	HEADWATERS	1	3	3	U	U

17040213 SALMON FALLS CREEK (ENTIRE DRAINAGE)

SEGMENT #	STREAM SEGMENT	LOWER BOUNDARY	UPPER BOUNDARY	RESIDENT FISH	WILDLIFE	CULTURAL	NATURAL FEATURES	RECREATION
458.00	SALMON FALLS CR	SNAKE R	SALMON FALLS DAM	2	1	2	1	3
459.00	SALMON FALLS RES			1	1	U	U	U
460.00	SALMON FALLS CR	SALMON FALLS RES	NEVADA LINE	1	1	2	3	3
461.00	DEVIL CR	SALMON FALLS CR	HEADWATERS	4	2	2	U	U
462.00	CEDAR CR	SALMON FALLS CR	ROSEWORTH RES	4	1	3	U	U
463.00	ROSEWORTH RES	OR CEDAR CREEK RES		1	1	U	U	U
464.00	CEDAR CR	ROSEWORTH RES	HEADWATERS	2	1	U	U	U
465.00	HOUSE CR	ROSEWORTH RES	HEADWATERS	2	3	U	1	U
466.00	SHOSHONE CR	NEVADA LINE	MAGIC HOT SPRINGS	2	2	U	3	3
467.00	SHOSHONE CR	MAGIC HOT SPRINGS	BIG CR	1	2	2	3	3
468.00	SHOSHONE CR	BIG CR	COTTONWOOD CR	3	2	2	U	3
469.00	SHOSHONE CR	COTTONWOOD CR	HEADWATERS	2	2	3	U	3
470.00	BIG CR	SHOSHONE CR	HEADWATERS	2	2	2	U	U
471.00	COTTONWOOD CR	SHOSHONE CR	HEADWATERS	3	2	4	U	U
472.00	HOT CR	SHOSHONE CR	NEVADA LINE	2	3	U	U	U

17040214 CAMAS,BEAV,&COTTWOOD (THREE DRAINAGES)

SEGMENT #	STREAM SEGMENT	LOWER BOUNDARY	UPPER BOUNDARY	RESIDENT FISH	WILDLIFE	CULTURAL	NATURAL FEATURES	RECREATION
190.00	CAMAS CR	MUD LK	HIGHWAY 91	4	1	U	U	U
191.00	CAMAS CR	HIGHWAY 91	SPRING CR	2	1	U	3	3
192.00	CAMAS CR	SPRING CR	HEADWATERS	U	2	2	U	3
193.00	BEAVER CR	CAMAS CR	DUBOIS	U	2	U	U	U
194.00	BEAVER CR	DUBOIS	SPENCER	2	2	U	U	U
195.00	BEAVER CR	SPENCER	HEADWATERS	2	2	3	U	U
196.00	THREEMILE CR	BEAVER CR	HEADWATERS	U	2	U	U	U

17040214 CAMAS,BEAV,&COTTWOOD (THREE DRAINAGES) [Cont.]

SEGMENT #	STREAM SEGMENT	LOWER BOUNDARY	UPPER BOUNDARY	RESIDENT FISH	WILDLIFE	CULTURAL	NATURAL FEATURES	RECREATION
197.00	RATTLESNAKE CR	THREEMILE CR	HEADWATERS	U	2	U	U	U
198.00	COTTONWOOD CR	R35ET10NS34	HEADWATERS	U	2	3	U	U
199.00	SPRING CR	CAMAS CR	HEADWATERS	U	2	U	U	U
200.00	CHINA CR	SPRING CR	HEADWATERS	2	2	3	U	U
201.00	CAMAS CR, W	CAMAS CR	HEADWATERS	2	2	2	3	U
202.00	CAMAS CR, E	CAMAS CR	HEADWATERS	2	2	2	U	U

17040215 MEDICINE,CROOK.,DEEP (THREE DRAINAGES)

SEGMENT #	STREAM SEGMENT	LOWER BOUNDARY	UPPER BOUNDARY	RESIDENT FISH	WILDLIFE	CULTURAL	NATURAL FEATURES	RECREATION
205.00	MEDICINE LODGE CR	SINKS	SMALL	4	2	U	U	2
206.00	MEDICINE LODGE CR	SMALL	WARM CR	2	2	2	U	2
207.00	INDIAN CR	MEDICINE LODGE CR	HEADWATERS	1	1	2	U	U
208.00	MIDDLE CR	MEDICINE LODGE CR	HEADWATERS	2	1	U	U	U
209.00	WEBBER CR	MEDICINE LODGE CR	HEADWATERS	U	1	U	1	3
210.00	EDDIE CR	MEDICINE LODGE CR	HEADWATERS	4	1	3	U	U
211.00	IRVING CR	MEDICINE LODGE CR	HEADWATERS	3	1	3	U	U
212.00	FRITZ CR	MEDICINE LODGE CR	HEADWATERS	3	1	U	U	U
213.00	WARM CR	MEDICINE LODGE CR	HEADWATERS	2	2	U	3	U
214.00	DIVIDE CR	MEDICINE LODGE CR	HEADWATERS	2	2	U	3	U
215.00	WARM SPRINGS CR	R34ET9NS30	HEADWATERS	4	2	2	3	U
216.00	CROOKED CR	R32ET10NS11	HEADWATERS	U	1	U	2	U

17040216 BIRCH CREEK (ENTIRE DRAINAGE)

SEGMENT #	STREAM SEGMENT	LOWER BOUNDARY	UPPER BOUNDARY	RESIDENT FISH	WILDLIFE	CULTURAL	NATURAL FEATURES	RECREATION
154.00	BIRCH CR	SINKS	RENO DITCH	4	2	U	2	2
155.00	BIRCH CR	RENO DITCH	BLUE DOME	1	2	2	2	2
156.00	BIRCH CR	BLUE DOME	HEADWATERS	1	2	2	1	2
157.00	PASS CR	BIRCH CR	HEADWATERS	U	2	2	U	3
158.00	WILLOW CR	BIRCH CR	HEADWATERS	2	2	U	U	U

17040217 LITTLE LOST RIVER (ENTIRE DRAINAGE)

SEGMENT #	STREAM SEGMENT	LOWER BOUNDARY	UPPER BOUNDARY	RESIDENT FISH	WILDLIFE	CULTURAL	NATURAL FEATURES	RECREATION
140.00	LITTLE LOST R	HOWE	DIVERSION	2	1	2	1	3
140.10	LITTLE LOST R	DIVERSION	SAWMILL CR	1	1	U	U	3
141.00	HURST CR	LITTLE LOST R	HEADWATERS	U	2	2	U	U
142.00	BIG SPRINGS CR	LITTLE LOST R	SPRINGS	2	2	3	U	3
143.00	BADGER CR	LITTLE LOST R	HEADWATERS	U	2	3	U	3

17040217 LITTLE LOST RIVER (ENTIRE DRAINAGE) [Cont.]

SEGMENT #	STREAM SEGMENT	LOWER BOUNDARY	UPPER BOUNDARY	RESIDENT FISH	WILDLIFE	CULTURAL	NATURAL FEATURES	RECREATION
144.00	DEER CR	LITTLE LOST R	HEADWATERS	3	2	2	2	U
145.00	WET CR	LITTLE LOST R	HEADWATERS	2	2	2	U	U
146.00	DRY CR	WET CR	DIVERSION	4	2	2	U	3
147.00	DRY CR	DIVERSION	HEADWATERS	2	2	U	U	3
148.00	SAWMILL CR	LITTLE LOST R	HEADWATERS	2	2	U	1	3
149.00	SQUAW CR	SAWMILL CR	HEADWATERS	U	2	U	1	3
150.00	SUMMIT CR	LITTLE LOST R	COUNTY LINE	U	2	3	U	3
151.00	SUMMIT CR	COUNTY LINE	HEADWATERS	U	2	2	1	U

17040218 BIG LOST RIVER (ENTIRE DRAINAGE)

SEGMENT #	STREAM SEGMENT	LOWER BOUNDARY	UPPER BOUNDARY	RESIDENT FISH	WILDLIFE	CULTURAL	NATURAL FEATURES	RECREATION
161.00	BIG LOST R	US 26 AT INEL	MOORE DIVERSION	3	3	4	1	3
162.00	BIG LOST R	MOORE DIVERSION	MACKAY DAM	2	2	U	2	3
163.00	MACKAY RES			2	3	U	U	U
164.00	BIG LOST R	MACKAY RES	CHILLY BUTTES	U	2	U	U	3
165.00	BIG LOST R	CHILLY BUTTES	BIG LOST R, N FK	2	2	U	U	3
166.00	BIG LOST R, N FK	FORKS	HEADWATERS	U	2	2	2	2
167.00	SPRING CR	BIG LOST R	SPRINGS	U	3	U	U	U
168.00	ANTELOPE CR	BIG LOST R	HEADWATERS	U	2	2	1	2
169.00	CHERRY CR	ANTELOPE CR	HEADWATERS	U	2	U	U	U
170.00	IRON BOG CR	ANTELOPE CR	HEADWATERS	U	2	U	1	U
171.00	PASS CR	BIG LOST R	HEADWATERS	U	2	U	2	U
172.00	ALDER CR	BIG LOST R	HEADWATERS	U	2	2	U	U
173.00	PARSONS CR	MACKAY RES	HEADWATERS	U	2	U	U	U
174.00	WARM SPRINGS CR	PARSONS CR	HEADWATERS	U	2	U	U	U
175.00	THOUSAND SPRINGS CR	BIG LOST R	SPRINGS	1	1	U	1	U
176.00	TWIN BRIDGES CR	BIG LOST R	HEADWATERS	U	2	U	U	U
177.00	SUMMIT CR	BIG LOST R, N FK	HEADWATERS	U	2	U	U	3
178.00	KANE CR	SUMMIT CR	HEADWATERS	U	2	2	1	2
179.00	BIG LOST R, E FK	FORKS	STARHOPE CR	2	2	2	3	2
180.00	BIG LOST R, E FK	STARHOPE CR	HEADWATERS	1	2	2	U	2
181.00	WILDHORSE CR	BIG LOST R, E FK	HEADWATERS	3	2	3	2	2
182.00	FALL CR	WILDHORSE CR	HEADWATERS	U	2	3	1	1
183.00	STARHOPE CR	BIG LOST R, E FK	HEADWATERS	U	2	U	2	U
184.00	LAKE CR	STARHOPE CR	HEADWATERS	U	2	U	1	1
185.00	MULDOON CR	STARHOPE CR	HEADWATERS	2	2	U	U	U
186.00	CORRAL CR	BIG LOST R, E FK	HEADWATERS	U	2	U	U	U
187.00	CABIN CR	BIG LOST R, E FK	HEADWATERS	U	2	U	U	U

17040219 BIG WOOD RIVER (EXCLUDES CAMAS AND L. WOOD)

SEGMENT #	STREAM SEGMENT	LOWER BOUNDARY	UPPER BOUNDARY	RESIDENT FISH	WILDLIFE	CULTURAL	NATURAL FEATURES	RECREATION
475.00	BIG WOOD R	SNAKE R	INTERSTATE 84 BRIDGE	1	2	U	1	2
476.00	BIG WOOD R	INTERSTATE 84 BRIDGE	LITTLE WOOD R	3	1	4	1	4
477.00	BIG WOOD R	LITTLE WOOD R	HIGHWAY 75	4	1	U	4	4
478.00	BIG WOOD R	HIGHWAY 75	RICHFIELD DIVERSION	3	2	U	2	4
479.00	BIG WOOD R	RICHFIELD DIVERSION	MAGIC DAM	1	2	U	2	2
480.00	MAGIC RES			1	1	U	2	U
481.00	BIG WOOD R	MAGIC RES	T1NR18ES35	1	1	U	2	3
482.00	BIG WOOD R	T1NR18ES35	GLENDALE DIVERSION	3	2	U	U	3
483.00	BIG WOOD R	GLENDALE DIVERSION	HEADWATERS	1	1	2	3	3
484.00	DRY CR	BIG WOOD R	HEADWATERS	2	2	U	1	4
485.00	THORN CR	BIG WOOD R	HEADWATERS	4	2	2	1	4
485.10	THORN CREEK RES			1	2	U	U	U
486.00	RICHFIELD CANAL	BIG WOOD R	COTTONWOOD SLOUGH	1	2	U	U	2
487.00	ROCK CR	MAGIC RES	HEADWATERS	1	2	U	2	4
488.00	WILLOW CR	BIG WOOD R	HEADWATERS	2	4	U	U	U
489.00	SEAMANS CR	BIG WOOD R	HEADWATERS	U	2	U	U	4
490.00	SLAUGHTERHOUSE CR	BIG WOOD R	HEADWATERS	U	2	U	2	4
491.00	CROY CR	BIG WOOD R	HEADWATERS	4	2	U	3	4
492.00	QUIGLEY CR	BIG WOOD R	HEADWATERS	2	2	U	2	4
493.00	INDIAN CR	LOWER REACHES	HEADWATERS	1	2	U	U	4
494.00	DEER CR	BIG WOOD R	HEADWATERS	1	2	U	3	4
495.00	GREENHORN GULCH CR	BIG WOOD R	HEADWATERS	U	3	2	U	4
496.00	WOOD R, E FK	BIG WOOD R	TRIUMPH	1	4	U	4	3
497.00	WOOD R, E FK	TRIUMPH	HEADWATERS	1	2	4	2	3
498.00	HYNDMAN CR	BIG WOOD R	HEADWATERS	U	3	3	U	U
499.00	TRAIL CR	BIG WOOD R	HEADWATERS	1	1	U	1	3
500.00	CORRAL CR	TRAIL CR	HEADWATERS	U	2	U	U	U
501.00	WARM SPRINGS CR	BIG WOOD R	HEADWATERS	1	1	3	3	U
502.00	LAKE CR	BIG WOOD R	HEADWATERS	1	3	U	U	3
503.00	FOX CR	BIG WOOD R	HEADWATERS	U	3	U	U	U
504.00	EAGLE CR	BIG WOOD R	HEADWATERS	1	3	4	U	U
505.00	BIG WOOD R, N FK	BIG WOOD R	HEADWATERS	1	2	U	3	U
506.00	BOULDER CR	BIG WOOD R	HEADWATERS	1	2	2	2	U
507.00	BAKER CR	BIG WOOD R	HEADWATERS	1	2	4	U	U
508.00	PRAIRIE CR	BIG WOOD R	HEADWATERS	1	3	3	U	U

17040220 CAMAS CREEK (ENTIRE DRAINAGE)

SEGMENT #	STREAM SEGMENT	LOWER BOUNDARY	UPPER BOUNDARY	RESIDENT FISH	WILDLIFE	CULTURAL	NATURAL FEATURES	RECREATION
531.00	CAMAS CR	MAGIC RES	MACON FLAT BRIDGE	2	2	U	1	3
532.00	CAMAS CR	BRIDGE T1SR16ES18	HEADWATERS	2	2	U	2	3
533.00	CAMP CR	CAMAS CR	HEADWATERS	1	2	U	2	4
534.00	WILLOW CR	CAMAS CR	HEADWATERS	2	2	U	2	3
535.00	ELK CR	CAMAS CR	HEADWATERS	2	3	U	2	3
536.00	DEER CR	CAMAS CR	HEADWATERS	2	2	U	2	4
537.00	SOLDIER CR	CAMAS CR	BASELINE	2	2	U	2	U

17040220 CAMAS CREEK (ENTIRE DRAINAGE) [Cont.]

SEGMENT #	STREAM SEGMENT	LOWER BOUNDARY	UPPER BOUNDARY	RESIDENT FISH	WILDLIFE	CULTURAL	NATURAL FEATURES	RECREATION
538.00	SOLDIER CR	BASELINE	HEADWATERS	2	2	4	2	3
539.00	MORMAN RES			1	2	U	4	U
540.00	THREEMILE CR	CAMAS CR	BASELINE	2	2	U	2	U
541.00	THREEMILE CR	BASELINE	HEADWATERS	1	2	U	2	3
542.00	CORRAL CR	CAMAS CR	BASELINE	3	2	U	2	U
543.00	CORRAL CR	BASELINE	HEADWATERS	2	2	U	2	3
544.00	CHIMNEY CR	CAMAS CR	HEADWATERS	U	2	U	2	3
545.00	COW CR	CAMAS CR	HEADWATERS	U	3	U	2	U
546.00	WILDHORSE CR	CAMAS CR	HEADWATERS	U	3	U	U	3

17040221 LITTLE WOOD RIVER (ENTIRE DRAINAGE)

SEGMENT #	STREAM SEGMENT	LOWER BOUNDARY	UPPER BOUNDARY	RESIDENT FISH	WILDLIFE	CULTURAL	NATURAL FEATURES	RECREATION
511.00	LITTLE WOOD R	BIG WOOD R	RICHFIELD (TOWN)	2	2	1	2	3
512.00	LITTLE WOOD R	RICHFIELD (TOWN)	SILVER CR	1	3	U	3	2
513.00	LITTLE WOOD R	SILVER CR	EAST CANAL DIVERSION	4	4	U	U	2
514.00	LITTLE WOOD R	EAST CANAL DIVERSION	LITTLE WOOD RES	1	3	U	4	2
515.00	LITTLE WOOD RES			1	4	U	U	U
516.00	LITTLE WOOD R	LITTLE WOOD RES	HEADWATERS	1	1	U	3	2
517.00	SILVER CR	LITTLE WOOD R	KILPATRICK BRIDGE	1	1	U	U	2
518.00	SILVER CR	KILPATRICK BRIDGE	STALKER CR	1	1	U	1	1
519.00	LOVING CR	SILVER CR	HEADWATERS	1	1	U	1	U
520.00	STALKER CR	SILVER CR	HEADWATERS	1	1	U	1	2
520.01	GROVE CR	SILVER CR	HEADWATERS	1	1	U	U	U
521.00	DRY CR	LITTLE WOOD R	HEADWATERS	3	3	U	4	4
522.00	FISH CR	CAREY LK	FISH CREEK RES	4	2	1	1	3
523.00	FISH CREEK RES			1	2	U	U	U
524.00	FISH CR	FISH CREEK RES	HEADWATERS	1	2	U	2	3
525.00	MULDOON CR	LITTLE WOOD R	HEADWATERS	1	2	U	2	3
526.00	FRIEDMAN CR	MULDOON CR	HEADWATERS	1	2	U	2	3
527.00	COPPER CR	MULDOON CR	HEADWATERS	1	2	U	2	2
528.00	BAUGH CR	LITTLE WOOD R	HEADWATERS	U	2	U	4	3

17050101 SNAKE RIVER (C.J.STRIKE TO KINGS HILL)

SEGMENT #	STREAM SEGMENT	LOWER BOUNDARY	UPPER BOUNDARY	RESIDENT FISH	WILDLIFE	CULTURAL	NATURAL FEATURES	RECREATION
414.00	CJ STRIKE RES			2	1	U	2	U
415.00	SNAKE R	HIGHWAY 51 BRIDGE	KING HILL	1	1	2	1	3
416.00	CANYON CR	SNAKE R	HEADWATERS	2	2	U	2	U
417.00	RATTLESNAKE CR	SNAKE R	HEADWATERS	2	3	U	2	U
418.00	BROWNS CR	SNAKE R	HEADWATERS	4	4	U	2	U
419.00	BENNETT CR	SNAKE R	HEADWATERS	1	2	3	1	U
420.00	SAILOR CR	SNAKE R	HEADWATERS	4	2	2	U	U

17050101 SNAKE RIVER (C.J.STRIKE TO KINGS HILL) [Cont.]

SEGMENT #	STREAM SEGMENT	LOWER BOUNDARY	UPPER BOUNDARY	RESIDENT FISH	WILDLIFE	CULTURAL	NATURAL FEATURES	RECREATION
421.00	COLD SPRINGS CR	SNAKE R	HEADWATERS	1	2	4	1	U
422.00	RYEGRASS CR	COLD SPRINGS CR	HEADWATERS	4	2	3	1	U
423.00	ALKALI CR	SNAKE R	HEADWATERS	4	3	3	3	U
424.00	LITTLE CANYON CR	SNAKE R	HEADWATERS	1	2	3	U	U
425.00	DEADMAN CR	SNAKE R	HEADWATERS	4	3	2	U	U
426.00	KING HILL CR	SNAKE R	WALKER DITCH	2	3	U	3	U
427.00	KING HILL CR	WALKER DITCH	HEADWATERS	1	1	U	2	U

17050102 BRUNEAU RIVER (ENTIRE DRAINAGE)

SEGMENT #	STREAM SEGMENT	LOWER BOUNDARY	UPPER BOUNDARY	RESIDENT FISH	WILDLIFE	CULTURAL	NATURAL FEATURES	RECREATION
549.00	BRUNEAU R	CJ STRIKE RES	HOT CR	3	1	2	1	U
550.00	BRUNEAU R	HOT CR	NEVADA LINE	1	2	2	1	1
551.00	JACKS CR	CJ STRIKE RES	LITTLE JACKS CR	4	2	3	1	U
552.00	SUGAR CR	JACKS CR	HEADWATERS	4	2	U	2	U
553.00	JACKS CR, LITTLE	JACKS CR	HEADWATERS	1	2	U	1	2
554.00	JACKS CR, BIG	JACKS CR	HEADWATERS	1	2	U	1	2
555.00	WICKAHONEY CR	BIG JACKS CR	HEADWATERS	1	2	U	U	U
556.00	DUNCAN CR	BIG JACKS CR	HEADWATERS	1	2	U	U	U
557.00	HOT CR	BRUNEAU R	HEADWATERS	4	1	U	1	U
558.00	BRUNEAU R, E FK	BRUNEAU R	HEADWATERS	3	1	U	1	3
559.00	BIG FLAT CR	BRUNEAU R, E FK	NEVADA LINE	U	2	U	U	U
560.00	CHERRY CR	BRUNEAU R, E FK	NEVADA LINE	3	2	U	U	U
561.00	THREE CR	BRUNEAU R, E FK	HEADWATERS	3	2	U	U	U
562.00	DEADWOOD CR	BRUNEAU R, E FK	HEADWATERS	3	2	U	U	U
563.00	SHEEP CR	BRUNEAU R	MARYS CR	2	2	U	2	2
564.00	SHEEP CR	MARYS CR	NEVADA LINE	2	3	U	U	2
565.00	MARYS CR	BRUNEAU R	DUCK VALLEY	2	3	U	U	U
565.10	MARYS CR	DUCK VALLEY	HEADWATERS	2	2	U	U	U
566.00	JARBIDGE R	BRUNEAU R	NEVADA LINE	1	1	U	1	1
567.00	COUGAR CR	JARBIDGE R	HEADWATERS	4	3	U	1	U
568.00	POISEN CR	JARBIDGE R	HEADWATERS	4	3	U	U	U
569.00	JARBIDGE R, E FK	JARBIDGE R	HEADWATERS	1	2	U	U	U

17050103 SNAKE RIVER (BOISE R. TO C.J.STRIKE RES.)

SEGMENT #	STREAM SEGMENT	LOWER BOUNDARY	UPPER BOUNDARY	RESIDENT FISH	WILDLIFE	CULTURAL	NATURAL FEATURES	RECREATION
668.00	SNAKE R	BOISE R	SWAN FALLS	1	1	1	1	2
669.00	SNAKE R	SWAN FALLS	CASTLE CR	3	1	1	1	3
670.00	SNAKE R	CASTLE CR	CJ STRIKE RES	2	1	1	1	3
671.00	SUCCOR CR	SNAKE R	OREGON LINE	3	2	U	1	U
671.10	SUCCOR CR	OREGON LINE	HEADWATERS	1	2	U	U	U
672.00	MCBRIDE CR	OREGON LINE	HEADWATERS	U	3	3	U	U

17050103 SNAKE RIVER (BOISE R. TO C.J.STRIKE RES.) [Cont.]

SEGMENT #	STREAM SEGMENT	LOWER BOUNDARY	UPPER BOUNDARY	RESIDENT FISH	WILDLIFE	CULTURAL	NATURAL FEATURES	RECREATION
673.00	JUMP CR	SNAKE R	HEADWATERS	1	2	U	2	U
674.00	SQUAW CR	SNAKE R	HEADWATERS	U	2	2	U	U
675.00	HARDTRIGGER CR	SNAKE R	HEADWATERS	4	2	U	3	U
676.00	REYNOLDS CR	SNAKE R	DIVERSION	U	2	3	2	U
676.10	REYNOLDS CR	DIVERSION	HEADWATERS	2	2	U	U	U
677.00	RABBIT CR	SNAKE R	HEADWATERS	4	2	U	1	U
678.00	SINKER CR	SNAKE R	HIGHWAY 78 BRIDGE	2	2	3	2	U
679.00	SINKER CR	HIGHWAY 78 BRIDGE	HEADWATERS	1	2	U	U	U
680.00	CASTLE CR	SNAKE R	T5SR1ES28	3	2	2	1	U
680.10	CASTLE CR	T5SR1ES28	HEADWATERS	2	2	U	U	U
681.00	PICKETT CR	CASTLE CR	T5SR1WS32	3	2	U	1	U
681.10	PICKETT CR	T5SR1WS32	HEADWATERS	2	2	U	U	U
682.00	BROWNS CR	PICKETT CR	HEADWATERS	4	2	2	1	U
683.00	CASTLE CR, S FK	CASTLE CR	HEADWATERS	2	2	U	U	U
684.00	BIRCH CR	SNAKE R	HEADWATERS	4	2	U	1	U
685.00	CORDER CR	SNAKE R	HEADWATERS	4	2	U	2	U
686.00	SHOEFLY CR	SNAKE R	HEADWATERS	2	2	3	1	U
687.00	POISON CR	SHOEFLY CR	HEADWATERS	4	2	U	1	U

17050104 OWYHEE RIVER (ABOVE S.FK. OWYHEE R.)

SEGMENT #	STREAM SEGMENT	LOWER BOUNDARY	UPPER BOUNDARY	RESIDENT FISH	WILDLIFE	CULTURAL	NATURAL FEATURES	RECREATION
611.00	OWYHEE R	OWYHEE R, S FK	DUCK VALLEY	3	1	U	1	1
612.00	OWYHEE R	DUCK VALLEY	NEVADA LINE	1	2	U	2	U
612.01	MOUNTAIN VIEW RES			1	U	U	U	U
613.00	RED CANYON CR	OWYHEE R	HEADWATERS	1	1	U	1	U
614.00	DEEP CR	OWYHEE R	HEADWATERS	2	1	2	3	1
615.00	DICKSHOOTER CR	DEEP CR	HEADWATERS	U	1	U	U	U
616.00	CASTLE CR	DEEP CR	HEADWATERS	U	3	U	U	U
617.00	POLE CR	DEEP CR	HEADWATERS	U	3	1	1	U
618.00	NICKEL CR	MOUTH	MUD FLAT ROAD	1	3	2	U	U
618.10	NICKEL CR	MUD FLAT ROAD	HEADWATERS	U	3	U	U	U
619.00	CURRENT CR	DEEP CR	HEADWATERS	1	3	2	U	U
620.00	HURRYBACK CR	DEEP CR	HEADWATERS	U	3	3	1	U
621.00	BATTLE CR	OWYHEE R	HEADWATERS	U	1	2	3	1
622.00	BIG SPRINGS CR	BATTLE CR	HEADWATERS	U	2	2	U	U
623.00	DRY CR	BATTLE CR	HEADWATERS	U	3	U	U	U
624.00	JUNIPER CR	OWYHEE R	NEVADA LINE	U	3	U	U	U
625.00	JUNIPER BASIN RES			U	3	U	U	U
626.00	BLUE CR	OWYHEE R	DUCK VALLEY	4	2	U	3	U
627.00	BLUE CREEK RES			4	3	U	U	U
628.00	BLUE CR	DUCK VALLEY	HEADWATERS	4	2	U	3	U
629.00	SQUAW CR	BLUE CR	HEADWATERS	U	3	U	U	U
630.00	SHOEFLY CR	BLUE CR	HEADWATERS	4	3	U	U	U

17050105 S.FK OWYHEE RIVER (ENTIRE DRAINAGE)

SEGMENT #	STREAM SEGMENT	LOWER BOUNDARY	UPPER BOUNDARY	RESIDENT FISH	WILDLIFE	CULTURAL	NATURAL FEATURES	RECREATION
632.00	OWYHEE R, S FK	OWYHEE R	NEVADA LINE	U	1	U	3	1
633.00	SPRING CR	OWYHEE R, S FK	HEADWATERS	U	3	U	U	U

17050106 LITTLE OWYHEE RIVER (S.FK. OWYHEE R. TO NE LINE)

SEGMENT #	STREAM SEGMENT	LOWER BOUNDARY	UPPER BOUNDARY	RESIDENT FISH	WILDLIFE	CULTURAL	NATURAL FEATURES	RECREATION
635.00	OWYHEE R, LITTLE	OWYHEE R, S FK	NEVADA LINE	U	3	U	U	U
636.00	TENT CR	LITTLE OWYHEE R	OREGON LINE	U	3	U	U	U
637.00	TENT CREEK RES			U	3	U	U	U

17050107 OWYHEE RIVER (BELOW S.FK.OWYHEE RIVER)

SEGMENT #	STREAM SEGMENT	LOWER BOUNDARY	UPPER BOUNDARY	RESIDENT FISH	WILDLIFE	CULTURAL	NATURAL FEATURES	RECREATION
639.00	OWYHEE R	OREGON LINE	OWYHEE R, S FK	U	2	U	U	1
640.00	OWYHEE R, M FK	OREGON LINE	HEADWATERS	U	2	U	U	U
641.00	OWYHEE R, N FK	OREGON LINE	HEADWATERS	U	2	U	2	2
641.01	CABIN CR	OWYHEE R, N FK	HEADWATERS	2	3	U	U	U
641.02	CORRAL CR	OWYHEE R, N FK	HEADWATERS	2	3	U	U	U
642.00	SQUAW CR	OREGON LINE	HEADWATERS	U	3	U	3	U
643.00	CHERRY CR	OREGON LINE	HEADWATERS	U	3	U	U	U
644.00	JUNIPER CR	OWYHEE R, N FK	HEADWATERS	U	3	U	U	U
645.00	PLEASANT VALLEY CR	OWYHEE R, N FK	HEADWATERS	U	3	U	1	U
646.00	HIGH NOON CR	OWYHEE R, N FK	HEADWATERS	U	3	U	U	U

17050108 JORDAN CREEK (NE LINE TO HW)

SEGMENT #	STREAM SEGMENT	LOWER BOUNDARY	UPPER BOUNDARY	RESIDENT FISH	WILDLIFE	CULTURAL	NATURAL FEATURES	RECREATION
648.00	JORDAN CR	OREGON LINE	WILLIAMS CR	U	2	3	U	3
649.00	JORDAN CR	WILLIAMS CR	HEADWATERS	1	2	U	U	U
650.00	WILLIAMS CR	JORDAN CR	HEADWATERS	2	3	U	U	U
651.00	BIG BOULDER CR	JORDAN CR	HEADWATERS(N FK INC)	1	1	3	3	U
652.00	BIG BOULDER CR, S FK	BOULDER CR	HEADWATERS	2	1	U	U	U
653.00	COMBINATION CR	BOULDER CR	HEADWATERS	2	2	U	U	U
654.00	ROCK CR	BIG BOULDER CR	TRIANGLE RES	U	3	U	3	U
654.01	ROSE CR	ROCK CR	HEADWATERS	1	3	U	U	U
655.00	TRIANGLE RES			1	3	U	U	U
656.00	ROCK CR	TRIANGLE RES	HEADWATERS	1	3	U	3	U
656.01	LOUISA CR	TRIANGLE RES	HEADWATERS	1	3	U	U	U
657.00	MEADOW CR	ROCK CR	HEADWATERS	U	3	3	U	U
658.00	JOSEPHINE CR	ROCK CR	HEADWATERS	1	3	U	U	U

17050108 JORDAN CREEK (NE LINE TO HW) [Cont.]

SEGMENT #	STREAM SEGMENT	LOWER BOUNDARY	UPPER BOUNDARY	RESIDENT FISH	WILDLIFE	CULTURAL	NATURAL FEATURES	RECREATION
659.00	FLINT CR	JORDAN CR	HEADWATERS	2	3	U	U	U
660.00	LOUSE CR	JORDAN CR	HEADWATERS	2	3	U	U	U
661.00	TROUT CR	OREGON LINE	HEADWATERS	U	1	3	U	U
661.01	COW CR	OREGON LINE	HEADWATERS	2	3	U	U	U
662.00	SODA CR	COW CR	HEADWATERS	4	3	2	U	U

17050111 M&N.FKS BOISE RIVER (BOTH DRAINAGES)

SEGMENT #	STREAM SEGMENT	LOWER BOUNDARY	UPPER BOUNDARY	RESIDENT FISH	WILDLIFE	CULTURAL	NATURAL FEATURES	RECREATION
753.00	BOISE R, N FK	BOISE R	BAYHORSE SPRINGS CR	1	1	2	1	1
754.00	BOISE R, N FK	BAYHORSE SPRINGS CR	HEADWATERS (EXEMPT)	U	2	U	U	3
755.00	FRENCH CR	BOISE R, N FK	HEADWATERS	2	3	4	U	U
756.00	MEADOW CR	BOISE R, N FK	HEADWATERS	2	3	2	1	U
757.00	RABBIT CR	BOISE R, N FK	HEADWATERS	2	2	4	U	U
758.00	CROOKED R	BOISE R, N FK	HEADWATERS	1	2	4	3	U
759.00	BIG OWL CR	BOISE R, N FK	HEADWATERS	2	2	4	U	U
760.00	BEAR R	BOISE R, N FK	HEADWATERS	2	1	3	U	U
761.00	BOISE R, M FK	ARROWROCK RES	WILDERNESS BOUNDARY	1	1	1	1	2
762.00	ROARING R	BOISE R, M FK	HEADWATERS	U	1	4	1	U
763.00	BLACKWARRIOR CR	BOISE R, M FK	HEADWATERS	2	2	U	U	U
764.00	QUEENS R	BOISE R, M FK	WILDERNESS BOUNDARY	2	2	4	3	U
765.00	QUEENS R	WILDERNESS BOUNDARY	HEADWATERS (EXEMPT)	U	U	U	U	U
766.00	QUEENS R, LITTLE	QUEENS R	HEADWATERS	1	2	4	U	3
767.00	YUBA R	BOISE R, M FK	HEADWATERS	1	3	2	U	U

17050112 BOISE RIVER (LUCKY PEAK DAM TO N.FK. BOISE)

SEGMENT #	STREAM SEGMENT	LOWER BOUNDARY	UPPER BOUNDARY	RESIDENT FISH	WILDLIFE	CULTURAL	NATURAL FEATURES	RECREATION
740.00	LUCKY PEAK RES			2	1	U	3	U
741.00	ARROWROCK RES			1	1	U	U	U
742.00	BOISE R	ARROWROCK RES	BOISE R, N FK	U	1	2	2	2
743.00	MORES CR	LUCKY PEAK RES	HEADWATERS	2	2	2	1	3
744.00	ROBIE CR	MORES CR	HEADWATERS	2	2	4	U	U
745.00	DAGGET CR	MORES CR	HEADWATERS	U	3	U	U	U
746.00	GRIMES CR	MORES CR	HEADWATERS	2	2	2	3	U
747.00	MACKS CR	GRIMES CR	HEADWATERS	1	2	3	U	U
748.00	GRANITE CR	GRIMES CR	HEADWATERS	2	3	2	U	U
749.00	ELK CR	MORES CR	HEADWATERS	2	3	2	2	U
750.00	COTTONWOOD CR	ARROWROCK RES	HEADWATERS	2	2	U	U	U
751.00	SHEEP CR	BOISE R	HEADWATERS	U	2	U	U	2

17050113 S.FK.BOISE RIVER (ENTIRE DRAINAGE)

SEGMENT #	STREAM SEGMENT	LOWER BOUNDARY	UPPER BOUNDARY	RESIDENT FISH	WILDLIFE	CULTURAL	NATURAL FEATURES	RECREATION
572.00	BOISE R, S FK	ARROWROCK RES	ANDERSON RANCH RES	1	1	2	1	1
573.00	ANDERSON RANCH RES			1	1	U	3	U
574.00	BOISE R, S FK	ANDERSON RANCH RES	HEADWATERS	1	1	3	1	2
575.00	WILLOW CR	ARROWROCK RES	HEADWATERS	2	3	2	U	U
576.00	WOOD CR	WILLOW CR	HEADWATERS	3	2	3	U	U
577.00	RATTLESNAKE CR	BOISE R, S FK	HEADWATERS	2	2	4	3	3
578.00	SMITH CR	BOISE R, S FK	HEADWATERS	2	3	2	3	U
579.00	TRAIL CR	BOISE R, S FK	HEADWATERS	2	2	3	U	U
580.00	BOCK CR	BOISE R, S FK	HEADWATERS	2	3	U	U	U
581.00	ROCK CR	BOISE R, S FK	HEADWATERS	3	3	3	U	U
582.00	MENEKE CR	BOISE R, S FK	HEADWATERS	2	3	U	U	U
583.00	LITTLE CAMAS CR	LITTLE CAMAS RES	HEADWATERS	2	3	U	U	U
584.00	LITTLE CAMAS RES			1	3	U	U	U
585.00	DEER CR	ANDERSON RANCH RES	HEADWATERS	U	2	U	U	U
586.00	DOG CR	BOISE R, S FK	HEADWATERS	1	3	U	U	U
587.00	FALL CR	ANDERSON RANCH RES	HEADWATERS	1	2	2	U	U
588.00	LIME CR	ANDERSON RANCH RES	HEADWATERS	1	1	U	2	U
589.00	GROUSE CR	BOISE R, S FK	HEADWATERS	2	1	2	2	U
590.00	TRINITY CR	BOISE R, S FK	HEADWATERS	2	2	4	1	U
591.00	FEATHER R	BOISE R, S FK	HEADWATERS	3	2	4	U	U
592.00	FEATHER R	CAYUSE CR	HEADWATERS	2	2	1	U	U
593.00	SHAKE CR	BOISE R, S FK	HEADWATERS	2	1	4	U	U
594.00	WILLOW CR	BOISE R, S FK	HEADWATERS	1	1	U	3	U
595.00	SKELETON CR	BOISE R, S FK	HEADWATERS	U	1	U	U	U
596.00	BOARDMAN CR	BOISE R, S FK	HEADWATERS	U	1	3	U	U
597.00	BIG SMOKEY CR	BOISE R, S FK	BARLOW CR	1	1	4	U	2
598.00	BIG SMOKEY CR	BARLOW CR	HEADWATERS	1	1	U	2	2
599.00	PARADISE CR	BIG SMOKEY CR	HEADWATERS	1	2	3	U	U
600.00	BIG SMOKEY CR, W FK	BIG SMOKEY CR	HEADWATERS	1	2	U	U	2
601.00	LITTLE SMOKEY CR	BIG SMOKEY CR	HEADWATERS	1	2	0	2	U
602.00	OP CR	BOISE R, S FK	HEADWATERS	1	3	4	U	U
603.00	SKUNK CR	BOISE R, S FK	HEADWATERS	2	2	4	U	U
604.00	BEAR CR	BOISE R, S FK	HEADWATERS	1	2	U	U	U
605.00	EMMA CR	BOISE R, S FK	HEADWATERS	1	2	U	U	U
606.00	JOHNSON CR	BOISE R, S FK	HEADWATERS	1	2	U	U	U
607.00	VIENNA CR	JOHNSON CR	HEADWATERS	1	2	U	U	U
608.00	ROSS FORK CR	BOISE R, S FK	HEADWATERS	1	2	U	U	U

17050114 BOISE RIVER (MOUTH TO LUCKY PEAK)

SEGMENT #	STREAM SEGMENT	LOWER BOUNDARY	UPPER BOUNDARY	RESIDENT FISH	WILDLIFE	CULTURAL	NATURAL FEATURES	RECREATION
726.00	BOISE R	SNAKE R	NOTUS (TOWN)	3	1	U	U	3
727.00	BOISE R	NOTUS (TOWN)	STAR (TOWN)	3	1	2	3	3
728.00	BOISE R	STAR (TOWN)	BARBER DIVERSION	1	1	2	3	2
729.00	BOISE R	BARBER DIVERSION	LUCKY PEAK DAM	1	1	1	U	1
730.00	SAND HOLLOW CR	BOISE R	HEADWATERS	2	3	U	U	U

17050114 BOISE RIVER (MOUTH TO LUCKY PEAK) [Cont.]

SEGMENT #	STREAM SEGMENT	LOWER BOUNDARY	UPPER BOUNDARY	RESIDENT FISH	WILDLIFE	CULTURAL	NATURAL FEATURES	RECREATION
731.00	INDIAN CR	BOISE R	NEW YORK CANAL	4	4	2	U	U
732.00	INDIAN CR	NEW YORK CANAL	HEADWATERS	2	3	U	U	U
733.00	MASON CR	BOISE R	HEADWATERS	4	4	U	U	U
734.00	FIVEMILE CR	BOISE R	HEADWATERS	3	4	2	U	U
735.00	DRY CR	BOISE R	HEADWATERS	U	4	U	U	U
736.00	TENMILE CR	FIFTEENMILE CR	HEADWATERS	3	4	U	U	U
737.00	BLACKS CR	BLACK CR RES	HEADWATERS	4	3	U	U	U
738.00	WILSON DRAIN	BOISE R	HEADWATERS	1	4	U	U	U

17050115 SNAKE RIVER (WEISER RIVER TO BOISE RIVER)

SEGMENT #	STREAM SEGMENT	LOWER BOUNDARY	UPPER BOUNDARY	RESIDENT FISH	WILDLIFE	CULTURAL	NATURAL FEATURES	RECREATION
664.00	SNAKE R	WEISER R	BOISE R	1	1	2	2	3
665.00	SAND HOLLOW	LOWER PAYETTE DITCH	HEADWATERS	1	2	U	U	U
666.00	BUTTERMILK SLOUGH	SNAKE R	SNAKE R	2	3	U	U	U

17050120 S.FK. PAYETTE RIVER (ENTIRE DRAINAGE)

SEGMENT #	STREAM SEGMENT	LOWER BOUNDARY	UPPER BOUNDARY	RESIDENT FISH	WILDLIFE	CULTURAL	NATURAL FEATURES	RECREATION
710.00	PAYETTE R, S FK	PAYETTE R	BARON CR	1	1	2	1	1
711.00	PAYETTE R, S FK	BARON CR	HEADWATERS (EXEMPT)	U	1	U	U	2
712.00	BIG PINE CR	PAYETTE R, S FK	HEADWATERS	2	1	3	U	U
713.00	DEADWOOD R	PAYETTE R, S FK	DEADWOOD RES	1	1	2	1	1
714.00	DEADWOOD RES			2	1	U	U	U
715.00	DEADWOOD R	DEADWOOD RES	HEADWATERS	1	1	2	U	U
716.00	WHITEHAWK CR	DEADWOOD R	HEADWATERS	U	1	4	U	U
717.00	WILSON CR	DEADWOOD R	HEADWATERS	U	1	3	U	U
718.00	WARM SPRINGS CR	DEADWOOD R	HEADWATERS	U	1	U	U	U
719.00	DEER CR	DEADWOOD R	HEADWATERS	U	1	U	U	U
720.00	CLEAR CR	PAYETTE R, S FK	HEADWATERS	1	1	3	U	U
721.00	EIGHTMILE CR	PAYETTE R, S FK	HEADWATERS	1	1	U	U	U
722.00	TENMILE CR	PAYETTE R, S FK	HEADWATERS	U	2	U	U	U
723.00	WARM SPRINGS CR	PAYETTE R, S FK	HEADWATERS	2	1	U	3	U
724.00	CANYON CR	PAYETTE R, S FK	HEADWATERS	2	2	U	U	U

17050121 MIDDLE FK PAYETTE R. (ENTIRE DRAINAGE)

SEGMENT #	STREAM SEGMENT	LOWER BOUNDARY	UPPER BOUNDARY	RESIDENT FISH	WILDLIFE	CULTURAL	NATURAL FEATURES	RECREATION
703.00	PAYETTE R, M FK	PAYETTE R	HEADWATERS	1	2	2	2	3
704.00	ANDERSON CR	PAYETTE R, M FK	HEADWATERS	U	1	U	U	U

17050121 MIDDLE FK PAYETTE R. (ENTIRE DRAINAGE) [Cont.]

SEGMENT #	STREAM SEGMENT	LOWER BOUNDARY	UPPER BOUNDARY	RESIDENT FISH	WILDLIFE	CULTURAL	NATURAL FEATURES	RECREATION
705.00	LIGHTNING CR	PAYETTE R, M FK	HEADWATERS	U	1	U	U	U
706.00	BIG BULLDOG CR	PAYETTE R, M FK	HEADWATERS	U	3	U	U	U
707.00	SILVER CR	PAYETTE R, M FK	HEADWATERS	2	3	U	1	U
708.00	BULL CR	PAYETTE R, M FK	HEADWATERS	U	2	U	2	U

17050122 PAYETTE RIVER (SNAKE R. TO N&M.FKS PAYETTE)

SEGMENT #	STREAM SEGMENT	LOWER BOUNDARY	UPPER BOUNDARY	RESIDENT FISH	WILDLIFE	CULTURAL	NATURAL FEATURES	RECREATION
689.00	PAYETTE R	SNAKE R	BLACK CANYON DAM	1	1	U	U	3
690.00	BLACK CANYON RES			4	3	U	U	U
691.00	PAYETTE R	BLACK CANYON RES	PAYETTE R, M FK	2	1	2	U	1
692.00	LITTLE WILLOW CR	PAYETTE R	HEADWATERS	2	2	3	2	U
693.00	PADDOCK VALLEY RES			1	2	U	U	U
694.00	BIG WILLOW CR	PAYETTE R	HEADWATERS	1	2	3	U	U
695.00	BISSEL CR	PAYETTE R	HEADWATERS	U	3	U	2	U
696.00	SQUAW CR	PAYETTE R	HEADWATERS	1	2	2	3	4
697.00	SOLDIER CR	SQUAW CR	HEADWATERS	U	2	U	U	U
698.00	SQUAW CR, SECOND FK	SQUAW CR	HEADWATERS	1	2	4	U	U
699.00	SHAFER CR	PAYETTE R	HEADWATERS	2	3	3	U	U
700.00	HARRIS CR	SHAFER CR	HEADWATERS	2	2	4	U	U
701.00	PORTER CR	PAYETTE R	HEADWATERS	1	2	U	U	U

17050123 N.FK. PAYETTE RIVER (ENTIRE DRAINAGE)

SEGMENT #	STREAM SEGMENT	LOWER BOUNDARY	UPPER BOUNDARY	RESIDENT FISH	WILDLIFE	CULTURAL	NATURAL FEATURES	RECREATION
881.00	PAYETTE R, N FK	BANKS	SMITHS FERRY	2	1	2	1	1
882.00	PAYETTE R, N FK	SMITHS FERRY	CLEAR CR	1	1	2	3	2
883.00	PAYETTE R, N FK	CLEAR CR	CASCADE RES DAM	2	1	U	3	3
884.00	CASCADE RES			1	1	U	3	U
885.00	PAYETTE R, N FK	CASCADE RES	LARDO DAM	1	1	U	U	3
885.01	PAYETTE LK			1	1	U	U	U
886.00	PAYETTE R, N FK	BIG PAYETTE L	FISHER CR	1	1	U	1	3
886.01	BOX LK			1	3	U	U	U
887.00	PAYETTE R, N FK	FISHER CR	UPPER PAYETTE L	2	2	3	U	3
887.01	PAYETTE LK, UPPER			1	2	U	U	U
888.00	PAYETTE R, N FK	UPPER PAYETTE L	HEADWATERS	2	2	3	U	U
889.00	ROUND VALLEY CR	PAYETTE R, N FK	HEADWATERS	U	2	U	U	U
890.00	CLEAR CR	PAYETTE R, N FK	HEADWATERS	2	1	U	U	U
891.00	BIG CR	PAYETTE R, N FK	HEADWATERS	2	2	U	U	U
892.00	BEAVER CR	PAYETTE R, N FK	HEADWATERS	U	3	3	U	U
893.00	GOLD FORK R	CASCADE RES	FLAT CR	3	2	U	U	U
894.00	GOLD FORK R	FLAT CR	HEADWATERS	2	1	2	1	U
895.00	BOULDER CR	CASCADE RES	HEADWATERS	3	2	U	U	U

17050123 N.FK. PAYETTE RIVER (ENTIRE DRAINAGE) [Cont.]

SEGMENT #	STREAM SEGMENT	LOWER BOUNDARY	UPPER BOUNDARY	RESIDENT FISH	WILDLIFE	CULTURAL	NATURAL FEATURES	RECREATION
895.01	LOUIE LK			1	1	U	U	U
895.02	BOULDER MEADOWS RES			2	3	U	U	U
895.03	BOULDER LK			1	1	U	U	U
896.00	LAKE FORK CR	CASCADE RES	LITTLE PAYETTE L	1	3	U	U	U
896.01	PAYETTE LK, LITTLE			1	2	U	U	U
897.00	LAKE FORK CR	LITTLE PAYETTE L	HEADWATERS	2	2	3	1	U
897.01	BROWNS POND			1	3	U	U	U
898.00	MUD CR	CASCADE RES	HEADWATERS	3	2	U	U	U
899.00	FISHER CR	PAYETTE R, N FK	HEADWATERS	1	2	4	U	U
899.01	GRANITE LK			2	3	U	U	U
900.00	TWENTYMILE CR	PAYETTE R, N FK	HEADWATERS	2	1	3	U	U

17050124 WEISER RIVER (ENTIRE DRAINAGE)

SEGMENT #	STREAM SEGMENT	LOWER BOUNDARY	UPPER BOUNDARY	RESIDENT FISH	WILDLIFE	CULTURAL	NATURAL FEATURES	RECREATION
834.00	WEISER R	SNAKE R	GALLOWAY DIVERSION	3	3	2	2	3
834.10	WEISER R	GALLOWAY DIVERSION	LITTLE WEISER R	3	2	U	U	U
835.00	WEISER R	LITTLE WEISER R	HEADWATERS	2	2	3	2	4
836.00	MONROE CR	WEISER R	HEADWATERS	2	2	3	1	U
837.00	MANNS CR	WEISER R	SPANGLER RES	2	2	U	U	U
838.00	MANNS CR	SPANGLER RES	HEADWATERS	2	2	3	2	U
839.00	COVE CR	WEISER R	HEADWATERS	U	2	3	2	U
840.00	CRANE CR	WEISER R	CRANE CR RES	4	2	3	1	U
841.00	CRANE CREEK RES			2	3	U	U	U
842.00	CRANE CR	CRANE CR RES	HEADWATERS	4	2	U	U	U
843.00	SAGE CR	WEISER R	HEADWATERS	2	2	U	1	U
844.00	KEITHLY CR	WEISER R	HEADWATERS	2	2	U	3	U
845.00	WEISER R, LITTLE	WEISER R	INDIAN VALLEY	3	4	3	1	U
846.00	WEISER R, LITTLE	INDIAN VALLEY	HEADWATERS	1	2	U	1	3
847.00	ANDERSON CR	LITTLE WEISER R	HEADWATERS	1	2	U	U	U
848.00	PINE CR	WEISER R	HEADWATERS	2	3	U	1	U
849.00	RUSH CR	WEISER R	HEADWATERS	1	2	U	U	U
850.00	GOODRICH CR	WEISER R	HEADWATERS	2	2	U	1	U
851.00	JOHNSON CR	WEISER R	HEADWATERS	U	2	U	U	U
852.00	WEISER R, M FK	WEISER R	CABIN CR	1	2	U	2	U
853.00	WEISER R, M FK	CABIN CR	HEADWATERS	1	1	3	2	U
854.00	COTTONWOOD CR	WEISER R	HEADWATERS	U	2	U	2	U
855.00	HORNET CR	WEISER R	HEADWATERS	2	2	3	U	U
856.00	HORNET CR, N FK	HORNET CR	HEADWATERS	2	2	3	U	U
857.00	WEISER R, W FK	WEISER R	HEADWATERS	1	2	U	U	U
858.00	LOST CR	WEISER R, W FK	LOST VALLEY RES	2	1	4	U	U
859.00	LOST VALLEY RES			1	1	U	U	U
860.00	LOST CR	LOST VALLEY RES	HEADWATERS	2	1	4	U	U

17050201 SNAKE RIVER (HELLS CANY TO WEISER R.)

EGMENT #	STREAM SEGMENT	LOWER BOUNDARY	UPPER BOUNDARY	RESIDENT FISH	WILDLIFE	CULTURAL	NATURAL FEATURES	RECREATION
816.00	SNAKE R	HELLS CANYON DAM	OXBOW DAM	1	1	2	1	U
817.00	SNAKE R	OXBOW DAM	BROWNLEE DAM	1	1	4	U	U
818.00	SNAKE R	BROWNLEE DAM	WEISER (TOWN)	1	1	2	2	3
819.00	INDIAN CR	SNAKE R	HEADWATERS	2	2	2	U	U
820.00	WILDHORSE R	SNAKE R	HEADWATERS	2	2	3	1	U
821.00	BEAR CR	WILDHORSE R	HEADWATERS	1	2	3	1	U
822.00	CROOKED R	WILDHORSE R	HEADWATERS	2	2	2	1	U
823.00	BROWNLEE CR	SNAKE R	HEADWATERS	2	2	U	1	U
824.00	STURGILL CR	SNAKE R	HEADWATERS	U	2	U	U	U
825.00	DENNETT CR	SNAKE R	HEADWATERS	2	2	U	1	U
826.00	WOLF CR	SNAKE R	HEADWATERS	U	2	U	U	U
827.00	ROCK CR	SNAKE R	HEADWATERS	2	2	U	U	U
828.00	WARM SPRINGS CR	SNAKE R	HEADWATERS	4	3	U	2	U
829.00	HOG CR	SNAKE R	HEADWATERS	3	3	U	2	U
830.00	SCOTT CR	SNAKE R	HEADWATERS	3	3	U	2	U
831.00	JENKINS CR	SNAKE R	HEADWATERS	2	3	U	2	U

7060101 SNAKE RIVER (SALMON RIVER TO HELLS CAN. DAM)

EGMENT #	STREAM SEGMENT	LOWER BOUNDARY	UPPER BOUNDARY	RESIDENT FISH	WILDLIFE	CULTURAL	NATURAL FEATURES	RECREATION
703.00	SNAKE R	SALMON R	COTTONWOOD CR	2	2	2	2	U
704.00	SNAKE R	COTTONWOOD CR	HELLS CANYON DAM	U	U	U	U	U
705.00	DIVIDE CR	SNAKE R	HEADWATERS	2	2	U	U	U
706.00	WOLF CR	SNAKE R	HEADWATERS	2	2	U	U	U
707.00	GETTA CR	SNAKE R	HEADWATERS	U	2	U	U	U
708.00	KIRKWOOD CR	SNAKE R	HEADWATERS	U	2	U	U	U
709.00	SHEEP CR	SNAKE R	HEADWATERS (EXEMPT)	U	U	U	U	U
710.00	BERNARD CR	SNAKE R	HEADWATERS (EXEMPT)	U	U	U	U	U
711.00	GRANITE CR	SNAKE R	HEADWATERS (EXEMPT)	U	U	U	U	U
712.00	DEEP CR	SNAKE R	WILDERNESS BOUNDARY	2	1	U	2	U

7060103 SNAKE RIVER (LEWISTON TO SALMON RIVER)

EGMENT #	STREAM SEGMENT	LOWER BOUNDARY	UPPER BOUNDARY	RESIDENT FISH	WILDLIFE	CULTURAL	NATURAL FEATURES	RECREATION
510.00	SNAKE R	LEWISTON (TOWN)	SALMON R	1	2	1	3	1
511.00	TAMMANY CR	SNAKE R	HEADWATERS	U	4	U	3	U
512.00	TENMILE CR	SNAKE R	HEADWATERS	1	3	U	U	U
513.00	REDBIRD CR	SNAKE R	HEADWATERS	U	3	3	U	U
514.00	CAPTAIN JOHN CR	SNAKE R	HEADWATERS	1	2	2	U	U
515.00	CORRAL CR	SNAKE R	HEADWATERS	U	3	U	U	U
516.00	COTTONWOOD CR	SNAKE R	HEADWATERS	U	3	3	U	U

17060108 PALOUSE RIVER (ENTIRE DRAINAGE)

SEGMENT #	STREAM SEGMENT	LOWER BOUNDARY	UPPER BOUNDARY	RESIDENT FISH	WILDLIFE	CULTURAL	NATURAL FEATURES	RECREATION
1120.00	PALOUSE R	WASHINGTON LINE	MEADOW CR	4	2	U	1	3
1121.00	PALOUSE R	MEADOW CR	HEADWATERS	3	2	2	1	3
1122.00	DEEP CR	PALOUSE R	HEADWATERS	U	3	U	U	U
1123.00	FLANNIGAN CR	PALOUSE R	HEADWATERS	U	3	U	U	U
1124.00	ROCK CR	PALOUSE R	HEADWATERS	U	3	U	U	U
1125.00	GOLD CR	PALOUSE R	HEADWATERS	4	2	2	U	U
1126.00	HATTER CR	PALOUSE R	HEADWATERS	4	3	U	U	U
1127.00	FLAT CR	PALOUSE R	HEADWATERS	4	2	U	U	U
1128.00	BIG CR	PALOUSE R	HEADWATERS	U	3	U	U	U
1129.00	MEADOW CR	PALOUSE R	HEADWATERS	3	2	2	2	U
1130.00	STRYCHNINE CR	PALOUSE R	HEADWATERS	3	2	2	U	U
1131.00	LITTLE SAND CR	PALOUSE R	HEADWATERS	4	2	3	U	U
1132.00	BIG SAND CR	PALOUSE R	HEADWATERS	4	2	3	U	U
1133.00	PALOUSE R, N FK	PALOUSE R	HEADWATERS	3	2	2	U	U
1134.00	PALOUSE R, S FK	WASHINGTON LINE	HEADWATERS	U	3	U	U	U
1135.00	PARADISE CR	PALOUSE R, S FK	HEADWATERS	4	3	U	3	U
1136.00	COW CR	WASHINGTON LINE	HEADWATERS	4	4	U	U	U

17060201 SALMON RIVER (PAHSIMEROI RIVER TO HW)

SEGMENT #	STREAM SEGMENT	LOWER BOUNDARY	UPPER BOUNDARY	RESIDENT FISH	WILDLIFE	CULTURAL	NATURAL FEATURES	RECREATION
1008.00	SALMON R	PAHSIMEROI R	SALMON R, E FK	1	1	2	1	1
1009.00	SALMON R	SALMON R, E FK	REDFISH CR	1	1	2	1	1
1010.00	SALMON R	REDFISH CR	HELLROARING CR	1	1	2	1	1
1011.00	SALMON R	HELLROARING CR	HEADWATERS	2	1	3	U	1
1012.00	MORGAN CR	SALMON R	HEADWATERS	2	1	2	1	3
1013.00	CHALLIS CR	SALMON R	FOREST BOUNDARY	3	2	2	U	3
1014.00	CHALLIS CR	FOREST BOUNDARY	HEADWATERS	2	2	U	1	3
1015.00	EDDY CR	CHALLIS CR	FOREST BOUNDARY	2	2	3	U	U
1016.00	EDDY CR	FOREST BOUNDARY	HEADWATERS	2	2	U	U	U
1017.00	GARDEN CR	SALMON R	FOREST BOUNDARY	3	2	3	1	U
1018.00	GARDEN CR	FOREST BOUNDARY	HEADWATERS	2	2	U	U	U
1019.00	WARM SPRINGS CR	SALMON R	HEADWATERS	4	2	1	1	U
1020.00	BAYHORSE CR	SALMON R	HEADWATERS	2	2	1	1	U
1021.00	SALMON R, E FK	SALMON R	BIG BOULDER CR	2	1	2	1	2
1022.00	SALMON R, E FK	BIG BOULDER CR	HEADWATERS	1	1	2	3	2
1023.00	HERD CR	SALMON R, E FK	HEADWATERS	2	2	2	1	U
1024.00	BIG LAKE CR	SALMON R, E FK	JIMMY SMITH L	2	2	2	U	U
1025.00	BIG LAKE CR	JIMMY SMITH L	HEADWATERS	1	2	3	U	U
1026.00	BIG BOULDER CR	SALMON R, E FK	HEADWATERS	2	2	3	U	U
1027.00	LITTLE BOULDER CR	SALMON R, E FK	HEADWATERS	2	2	4	U	U
1028.00	GERMAINIA CR	SALMON R, E FK	HEADWATERS	1	2	U	U	U
1029.00	SQUAW CR	SALMON R	FOREST BOUNDARY	2	2	2	U	U
1030.00	SQUAW CR	FOREST BOUNDARY	HEADWATERS	1	2	3	U	U
1031.00	THOMPSON CR	SALMON R	HEADWATERS	2	3	3	U	U
1032.00	SLATE CR	SALMON R	HEADWATERS	2	2	3	3	U

17060201 SALMON RIVER (PAHSIMEROI RIVER TO HW) [Cont.]

SEGMENT #	STREAM SEGMENT	LOWER BOUNDARY	UPPER BOUNDARY	RESIDENT FISH	WILDLIFE	CULTURAL	NATURAL FEATURES	RECREATION
1033.00	WARM SPRINGS CR	SALMON R	SWIMM CR	1	3	U	U	U
1034.00	WARM SPRINGS CR	SWIMM CR	HEADWATERS	1	3	U	U	U
1035.00	SALMON R, YANKEE FK	SALMON R	JORDAN CR	2	2	1	1	1
1036.00	SALMON R, YANKEE FK	JORDAN CR	HEADWATERS	1	1	2	3	2
1037.00	SALMON R, W FK YANKEE FK	SALMON R, YANKEE FK	HEADWATERS	1	1	2	U	U
1038.00	BASIN CR	SALMON R	HEADWATERS	1	1	U	U	3
1039.00	BIG CASSINO CR	SALMON R	HEADWATERS	2	3	U	U	U
1040.00	VALLEY CR	SALMON R	STANLEY L CR	3	2	2	U	3
1041.00	VALLEY CR	STANLEY L CR	HEADWATERS	2	1	4	U	3
1042.00	STANLEY LAKE CR	VALLEY CR	HEADWATERS	3	2	4	2	U
1043.00	ELK CR	VALLEY CR	HEADWATERS	2	1	4	U	U
1044.00	REDFISH LAKE CR	SALMON R	REDFISH L	1	1	1	2	U
1045.00	FISHHOOK CR	REDFISH L	WILDERNESS BOUNDARY	1	1	3	U	U
1046.00	FISHER CR	SALMON R	HEADWATERS	2	2	U	U	U
1047.00	FOURTH JULY CR	SALMON R	HEADWATERS	2	1	3	U	U
1048.00	CHAMPION CR	SALMON R	HEADWATERS	2	1	2	U	U
1049.00	HELLROARING CR	SALMON R	WILDERNESS BOUNDARY	1	1	4	U	U
1050.00	ALTURAS LAKE CR	SALMON R	DIVERSION(T8NR14E55)	2	1	4	U	U
1051.00	ALTURAS LAKE CR	DIVERSION(T8NR14E55)	ALTURAS L	1	1	2	1	U
1052.00	ALTURAS LAKE CR	ALTURAS L	WILDERNESS BOUNDARY	1	2	U	U	U
1053.00	BEAVER CR	SALMON R	HEADWATERS	1	2	1	U	3
1054.00	POLE CR	SALMON R	HEADWATERS	1	2	3	1	U
1055.00	SMILEY CR	SALMON R	HEADWATERS	1	2	4	U	U
1056.00	FRENCHMAN CR	SALMON R	HEADWATERS	U	2	U	U	U

17060202 PAHSIMEROI RIVER (ENTIRE DRAINAGE)

SEGMENT #	STREAM SEGMENT	LOWER BOUNDARY	UPPER BOUNDARY	RESIDENT FISH	WILDLIFE	CULTURAL	NATURAL FEATURES	RECREATION
1099.00	PAHSIMEROI R	SALMON R	DOWTON LANE	1	1	2	U	3
1100.00	PAHSIMEROI R	DOWTON LANE	HEADWATERS	1	1	2	1	2
1101.00	MORGAN CR	LOWER REACHES	HEADWATERS	2	1	2	1	U
1102.00	PATTERSON CR	PAHSIMEROI R	FOREST BOUNDARY	3	1	U	U	3
1103.00	PATTERSON CR	FOREST BOUNDARY	HEADWATERS	2	2	3	U	3
1104.00	LAWSON CR	PAHSIMEROI R	FOREST BOUNDARY	U	3	U	U	U
1105.00	LAWSON CR	FOREST BOUNDARY	HEADWATERS	U	2	U	U	U
1106.00	MORSE CR	PAHSIMEROI R	FOREST BOUNDARY	3	2	U	U	U
1107.00	MORSE CR	FOREST BOUNDARY	HEADWATERS	2	2	U	U	U
1108.00	GROUSE CR	PAHSIMEROI R	FOREST BOUNDARY	U	2	2	U	U
1109.00	GROUSE CR	FOREST BOUNDARY	HEADWATERS	U	2	2	U	U
1110.00	BIG CR	PAHSIMEROI R	FROEST BOUNDARY	3	2	U	U	U
1111.00	BIG CR	FOREST BOUNDARY	HEADWATERS	1	2	U	U	U
1112.00	DOUBLESPRING CR	PAHSIMEROI R	FOREST BOUNDARY	U	2	2	2	U
1113.00	DOUBLESPRING CR	FOREST BOUNDARY	HEADWATERS	U	2	2	2	U
1114.00	BURNT CR	PAHSIMEROI R	FOREST BOUNDARY	2	1	2	U	U
1115.00	BURNT CR	FOREST BOUNDARY	HEADWATERS	2	1	U	U	U
1116.00	LONG CR	BURNT CR	HEADWATERS	2	1	U	U	U

17060203 SALMON RIVER (M. FK. TO PAHSIMEROI)

SEGMENT #	STREAM SEGMENT	LOWER BOUNDARY	UPPER BOUNDARY	RESIDENT FISH	WILDLIFE	CULTURAL	NATURAL FEATURES	RECREATION
963.00	SALMON R	SALMON R, M FK	SALMON R, N FK (EX)	U	1	U	2	U
964.00	SALMON R	SALMON R, N FK	PAHSIMEROI R	1	1	2	1	1
965.00	OWL CR	SALMON R	OWL CR, E FK	2	2	3	U	U
966.00	OWL CR	OWL CR, E FK	HEADWATERS	2	2	2	3	U
967.00	PANTHER CR	SALMON R	BLACKBIRD CR	2	1	2	3	2
968.00	PANTHER CR	BLACKBIRD CR	HEADWATERS	2	1	2	U	2
969.00	CLEAR CR	PANTHER CR	WILDERNESS BOUNDARY	1	1	U	U	U
970.00	BEAVER CR	PANTHER CR	SAWLOG GULCH	2	1	U	U	U
971.00	BEAVER CR	SAWLOG GULCH	HEADWATERS	2	2	U	U	U
972.00	BIG DEER CR	PANTHER CR	BIG DEER CR, S FK	3	2	U	U	U
973.00	BIG DEER CR	BIG DEER CR, S FK	HEADWATERS	1	2	U	U	U
974.00	NAPIAS CR	PANTHER CR	FALLS (1 MILE UP)	1	2	U	3	U
975.00	NAPIAS CR	FALLS (1 MILE UP)	HEADWATERS	2	2	1	2	U
976.00	DEEP CR	PANTHER CR	HEADWATERS	2	2	U	U	U
977.00	BLACKBIRD CR	PANTHER CR	HEADWATERS	3	2	2	U	U
978.00	MOYER CR	PANTHER CR	HEADWATERS	1	2	U	U	U
979.00	MUSGROVE CR	PANTHER CR	HEADWATERS	1	2	U	U	U
980.00	PINE CR	SALMON R	VIRGINIA GULCH	1	1	3	U	U
981.00	PINE CR	VIRGINIA GULCH	HEADWATERS	2	1	U	U	U
982.00	BOULDER CR	SALMON R	HORSEFLY GULCH	2	2	U	U	U
983.00	BOULDER CR	HORESFLY GULCH	HEADWATERS	2	2	3	U	U
984.00	SPRING CR	SALMON R	HEADWATERS	2	1	U	2	U
985.00	SQUAW CR	SALMON R	HEADWATERS	1	1	U	U	U
986.00	INDIAN CR	SALMON R	HEADWATERS	1	2	3	U	U
987.00	MOOSE CR	SALMON R	LITTLE MOOSE CR	2	3	U	U	U
988.00	MOOSE CR	LITTLE MOOSE CR	HEADWATERS	1	2	2	U	U
989.00	DUMP CR	SALMON R	HEADWATERS	4	3	U	U	U
990.00	SALMON R, N FK	SALMON R	HEADWATERS	1	1	U	1	3
991.00	HUGHES CR	SALMON R, N FK	HEADWATERS	3	1	2	2	U
992.00	DAHLONEGA CR	SALMON R, N FK	HEADWATERS	2	2	1	U	U
993.00	FOURTH JULY CR	SALMON R	COTTONWOOD CR	3	2	U	U	U
994.00	FOURTH JULY CR	COTTONWOOD CR	HEADWATERS	2	2	4	U	U
995.00	CARMEN CR	SALMON R	FREEMAN CR	4	2	U	U	U
996.00	CARMEN CR	FREEMAN CR	HEADWATERS	2	2	U	U	U
997.00	WILLIAMS CR	SALMON R	SALMON R, S FK	2	2	3	1	U
998.00	WILLIAMS CR	SALMON R, S FK	HEADWATERS	2	1	U	2	U
999.00	TWELVEMILE CR	SALMON R	HEADWATERS	2	2	2	U	U
1000.00	WARM SPRINGS CR	SALMON R	FOREST BOUNDARY	2	2	U	U	U
1001.00	WARM SPRINGS CR	FOREST BOUNDARY	HEADWATERS	1	2	4	3	U
1002.00	IRON CR	SALMON R	HEADWATERS	2	2	U	3	U
1003.00	POISON CR	SALMON R	HEADWATERS	2	2	U	U	U
1004.00	HAT CR	SALMON R	HEADWATERS	2	2	U	U	U
1005.00	COW CR	SALMON R	HEADWATERS	2	2	U	U	U

17060204 LEMHI RIVER (ENTIRE DRAINAGE)

SEGMENT #	STREAM SEGMENT	LOWER BOUNDARY	UPPER BOUNDARY	RESIDENT FISH	WILDLIFE	CULTURAL	NATURAL FEATURES	RECREATION
1059.00	LEMHI R	SALMON R	HAYDEN CR	2	1	U	1	3
1060.00	LEMHI R	HAYDEN CR	HEADWATERS	1	1	U	1	3
1061.00	KIRTLEY CR	LEMHI R	BLM BOUNDARY	3	3	U	U	U
1062.00	KIRTLEY CR	BLM BOUNDARY	HEADWATERS	2	3	U	U	U
1063.00	GEERTSON CR	LEMHI R	BLM BOUNDARY	3	3	2	U	U
1064.00	GEERTSON CR	BLM BOUNDARY	HEADWATERS	2	3	U	U	U
1065.00	BOHANNON CR	LEMHI R	BLM BOUNDARY	3	3	U	U	U
1066.00	BOHANNON CR	BLM BOUNDARY	HEADWATERS	2	3	U	U	U
1067.00	WIMPEY CR	LEMHI R	BLM BOUNDARY	3	3	U	U	U
1068.00	WIMPEY CR	BLM BOUNDARY	HEADWATERS	2	3	U	2	U
1069.00	WITHINGTON CR	LEMHI R	HEADWATERS	2	2	U	U	U
1070.00	SANDY CR	LEMHI R	BLM BOUNDARY	4	3	U	U	U
1071.00	SANDY CR	BLM BOUNDARY	HEADWATERS	2	3	U	U	U
1072.00	KENNY CR	LEMHI R	BLM BOUNDARY	4	3	U	U	U
1073.00	KENNY CR	BLM BOUNDARY	HEADWATERS	2	1	U	U	U
1074.00	HAYNES CR	LEMHI R	HEADWATERS	2	2	U	U	U
1075.00	PATTEE CR	LEMHI R	HEADWATERS	2	2	1	1	U
1076.00	AGENCY CR	LEMHI R	HEADWATERS	2	1	1	1	3
1077.00	MCDEVITT CR	LEMHI R	BLM BOUNDARY	3	2	U	U	U
1078.00	MCDEVITT CR	BLM BOUNDARY	HEADWATERS	3	2	U	U	U
1079.00	HAYDEN CR	LEMHI R	HEADWATERS	1	1	U	U	U
1080.00	BASIN CR	HAYDEN CR	HEADWATERS	2	3	U	1	U
1081.00	BEAR VALLEY CR	HAYDEN CR	HEADWATERS	1	3	U	1	U
1082.00	MILL CR	LEMHI R	FOREST BOUNDARY	3	3	U	U	U
1083.00	MILL CR	FOREST BOUNDARY	HEADWATERS	2	3	U	1	U
1084.00	LITTLE EIGHTMILE CR	LEMHI R	FOREST BOUNDARY	3	3	U	U	U
1085.00	LITTLE EIGHTMILE CR	FOREST BOUNDARY	HEADWATERS	2	2	U	U	U
1086.00	BIG EIGHTMILE CR	LEMHI R	FOREST BOUNDARY	3	3	U	1	U
1087.00	BIG EIGHTMILE CR	FOREST BOUNDARY	HEADWATERS	2	3	U	1	U
1088.00	RAILROAD CANYON CR	LEMHI R	FOREST BOUNDARY	2	3	2	U	U
1089.00	RAILROAD CANYON CR	FOREST BOUNDARY	HEADWATERS	2	1	2	U	U
1090.00	BIG TIMBER CR	LEMHI R	FOREST BOUNDARY	3	2	U	3	U
1091.00	BIG TIMBER CR	FOREST BOUNDARY	HEADWATERS	2	2	U	U	U
1092.00	TEXAS CR	LEMHI R	HEADWATERS	3	3	U	1	3
1093.00	EIGHTEENMILE CR	LEMHI R	T14SR27ES7	4	2	U	U	3
1094.00	EIGHTEENMILE CR	T14SR27ES7	HEADWATERS	2	2	U	3	U
1095.00	HAWLEY CR	EIGHTEENMILE CR	FOREST BOUNDARY	4	2	2	U	3
1096.00	HAWLEY CR	FOREST BOUNDARY	HEADWATERS	1	1	3	U	U

17060205 MIDDLE FORK SALMON R (ABOVE LOON CREEK)

SEGMENT #	STREAM SEGMENT	LOWER BOUNDARY	UPPER BOUNDARY	RESIDENT FISH	WILDLIFE	CULTURAL	NATURAL FEATURES	RECREATION
789.00	LOON CR	SALMON R, M FK	SHELL CR (EXEMPT)	U	2	U	U	U
790.00	LOON CR	SHELL CR	NONAME CR	1	1	3	U	U
791.00	LOON CR	NONAME CR	HEADWATERS (EXEMPT)	U	2	U	U	U
792.00	GROUSE CR	LOON CR	HEADWATERS	2	1	U	U	U

17060205 MIDDLE FORK SALMON R (ABOVE LOON CREEK) [Cont.]

SEGMENT #	STREAM SEGMENT	LOWER BOUNDARY	UPPER BOUNDARY	RESIDENT FISH	WILDLIFE	CULTURAL	NATURAL FEATURES	RECREATION
793.00	CANYON CR	LOON CR	HEADWATERS	2	1	U	U	U
794.00	MAYFIELD CR	LOON CR	HEADWATERS	1	1	2	U	U
795.00	MAYFIELD CR, E FK	MAYFIELD CR	HEADWATERS	1	1	U	U	U
796.00	MARBLE CR	SALMON R, M FK	HEADWATERS (MINES)	1	1	U	U	U
797.00	PISTOL CR	SALMON R, M FK	HEADWATERS (MINES)	1	1	U	U	U
798.00	PISTOL CR, LITTLE	PISTOL CR	HEADWATERS (MINES)	1	1	U	U	U
799.00	RAPID R	SALMON R, M FK	LUCINDA CR (EXEMPT)	1	U	U	U	U
800.00	RAPID R	LUCINDA CR	HEADWATERS	1	1	U	U	U
801.00	FLOAT CR	RAPID R	HEADWATERS	3	1	3	U	U
802.00	VANITY CR	RAPID R	HEADWATERS	3	1	2	U	U
803.00	GREYHOUND CR	SALMON R, M FK	WILDERNESS BOUNDARY	U	U	U	U	U
804.00	GREYHOUND CR	WILDERNESS BOUNDARY	HEADWATERS	3	1	U	U	U
805.00	ELKHORN CR	SALMON R, M FK	HEADWATERS (MINES)	U	1	U	U	U
806.00	SULPHUR CR	SALMON R, M FK	HEADWATERS	1	1	U	U	U
807.00	DAGGER CR	SALMON R, M FK	HEADWATERS	U	1	4	U	U
808.00	BEAR VALLEY CR	WILDERNESS BOUNDARY	HEADWATERS	2	1	3	3	2
809.00	MARSH CR	SALMON R, M FK	BEAVER CR	U	U	U	U	2
810.00	MARSH CR	BEAVER CR	HEADWATERS	1	1	U	3	2
811.00	BEAVER CR	MARSH CR	HEADWATERS	1	1	U	U	U
812.00	KNAPP CR	MARSH CR	HEADWATERS	1	1	U	U	U
813.00	CAPE HORN CR	MARSH CR	HEADWATERS	1	1	U	U	U

17060206 MIDDLE FK SALMON R. (MOUTH TO LOON CREEK)

SEGMENT #	STREAM SEGMENT	LOWER BOUNDARY	UPPER BOUNDARY	RESIDENT FISH	WILDLIFE	CULTURAL	NATURAL FEATURES	RECREATION
770.00	SALMON R, M FK	SALMON R	MARSH CR (EXEMPT)	U	1	U	U	U
771.00	BIG CR	SALMON R, M FK	SMITH CR (MINES)	1	1	2	U	U
772.00	BIG CR	SMITH CR	HEADWATERS	1	1	3	U	U
773.00	CROOKED CR	BIG CR	HEADWATERS (MINES)	2	1	2	U	U
774.00	MONUMENTAL CR	BIG CR	FALL CR (MINES)	1	1	2	3	U
775.00	MONUMENTAL CR	FALL CR	HEADWATERS	1	1	U	3	U
776.00	SMITH CR	BIG CR	HEADWATERS	U	1	3	U	U
777.00	LOGAN CR	BIG CR	HEADWATERS	U	1	U	U	U
778.00	CAMAS CR	SALMON R, M FK	FORGE CR (EXEMPT)	1	U	U	2	U
779.00	CAMAS CR	FORGE CR	WHITE GOAT CR	2	1	2	2	U
780.00	YELLOWJACKET CR	CAMAS CR	WILDERNESS BOUNDARY	1	2	U	U	U
781.00	YELLOWJACKET CR	JENNY CR (WILD BDRY)	HEADWATERS	2	1	U	U	U
782.00	HOODOO CR	YELLOWJACKET CR	HEADWATERS	2	1	U	U	U
783.00	CAMAS CR, W FK	CAMAS CR	FLUME CR	2	2	U	U	U
784.00	SILVER CR	CAMAS CR	HEADWATERS	2	1	2	2	U
785.00	CASTLE CR	CAMAS CR	HEADWATERS	2	1	U	U	U
786.00	FURNACE CR	CAMAS CR	HEADWATERS	2	1	U	U	U

17060207 SALMON RIVER (FRENCH CK TO M.FK SALMON)

SEGMENT #	STREAM SEGMENT	LOWER BOUNDARY	UPPER BOUNDARY	RESIDENT FISH	WILDLIFE	CULTURAL	NATURAL FEATURES	RECREATION
1345.00	SALMON R	FRENCH CR	WILDERNESS BOUNDARY	1	1	2	3	1
1346.00	SALMON R	WIND R	SALMON R, M FK (EX)	U	U	U	3	U
1347.00	SHEEP CR	WILDERNESS BOUNDARY	HEADWATERS	U	2	U	U	U
1348.00	CALIFORNIA CR	WILDERNESS BOUNDARY	HEADWATERS	1	1	U	U	U
1349.00	CROOKED CR	WILDERNESS BOUNDARY	HEADWATERS	U	1	3	2	U
1350.00	LAKE CR	CROOKED CR	HEADWATERS (MINES)	U	1	U	1	U
1351.00	BIG CR	CROOKED CR	HEADWATERS	U	1	2	1	I
1352.00	WARREN CR	WILDERNESS BOUNDARY	HEADWATERS	U	1	2	1	U
1353.00	JERSEY CR	WILDERNESS BOUNDARY	HEADWATERS	2	1	U	U	U
1354.00	RHETT CR	WILDERNESS BOUNDARY	HEADWATERS	1	1	4	U	U
1355.00	MALLARD CR, LITTLE	SALMON R	HEADWATERS	1	1	U	U	U
1356.00	MALLARD CR, BIG	WILDERNESS BOUNDARY	HEADWATERS	1	1	U	3	U
1357.00	BARGAMIN CR	WILDERNESS BOUNDARY	HEADWATERS	1	1	U	U	3
1358.00	LITTLE HORSE CR	HORSE CR	HEADWATERS	U	2	U	U	U
1359.00	CORN CR	SALMON R	HEADWATERS	U	1	3	U	U

17060208 SOUTH FORK SALMON R. (ENTIRE DRAINAGE)

SEGMENT #	STREAM SEGMENT	LOWER BOUNDARY	UPPER BOUNDARY	RESIDENT FISH	WILDLIFE	CULTURAL	NATURAL FEATURES	RECREATION
915.00	SALMON R, S FK	SALMON R	STATION CR	1	1	2	U	1
916.00	SALMON R, S FK	STATION CR	KNOB CR	U	U	U	U	1
917.00	SALMON R, S FK	KNOB CR	SECESH R	1	1	2	1	1
918.00	SALMON R, S FK	SECESH R	BUCKHORN CR	1	1	2	U	2
919.00	SALMON R, S FK	BUCKHORN CR	RICE CR	1	1	2	1	2
920.00	SALMON R, S FK	RICE CR	HEADWATERS	1	1	3	1	3
921.00	RAINES CR	WILDERNESS BOUNDARY	HEADWATERS	U	1	U	U	U
922.00	PORPHYRY CR	SALMON R, S FK	HEADWATERS (EXEMPT)	U	U	U	U	U
923.00	PONY CR	SALMON R, S FK	HEADWATERS	1	1	2	1	U
924.00	ELK CR	SALMON R, S FK	HEADWATERS	1	1	3	U	U
925.00	BEAR CR	SALMON R, S FK	HEADWATERS	1	1	2	U	U
926.00	SHEEP CR	SALMON R, S FK	HEADWATERS	1	1	U	2	U
927.00	SECESH R	SALMON R, S FK	LICK CR	1	1	2	U	2
928.00	SECESH R	LICK CR	LOON CR	1	1	U	3	1
929.00	SECESH R	LOON CR	LAKE CR	1	1	2	2	3
930.00	LICK CR	SECESH R	HEADWATERS	1	1	4	1	3
931.00	LOON CR	SECESH R	HEADWATERS	U	1	U	3	U
932.00	LAKE CR	SECESH R	HEADWATERS	1	1	1	3	U
933.00	SUMMIT CR	SECESH R	HEADWATERS	*	1	2	1	U
934.00	SALMON R, S FK E FK	SALMON R, S FK	JOHNSON CR	1	1	2	U	2
935.00	SALMON R, S FK E FK	JOHNSON CR	SUGAR CR	1	1	U	U	3
936.00	SALMON R, S FK E FK	SUGAR CR	HEADWATERS	1	1	2	3	3
937.00	CATON CR	SALMON R, S FK E FK	HEADWATERS	1	1	U	U	U
938.00	REEGAN CR	SALMON R, S FK E FK	HEADWATERS	1	1	U	U	U
939.00	PARKS CR	SALMON R, S FK E FK	HEADWATERS	1	1	U	U	U
940.00	JOHNSON CR	SALMON R, S FK E FK	ICE HOLE CAMPGROUND	1	1	3	3	3
941.00	JOHNSON CR	ICE HOLE CAMPGROUND	HALFWAY CR	1	1	2	U	3

17060208 SOUTH FORK SALMON R. (ENTIRE DRAINAGE) [Cont.]

SEGMENT #	STREAM SEGMENT	LOWER BOUNDARY	UPPER BOUNDARY	RESIDENT FISH	WILDLIFE	CULTURAL	NATURAL FEATURES	RECREATION
942.00	JOHNSON CR	HALFWAY CR	HEADWATERS	1	1	2	U	3
943.00	RIORDAN CR	JOHNSON CR	HEADWATERS	1	1	U	U	U
944.00	TRAPPER CR	JOHNSON CR	HEADWATERS	1	1	3	1	U
945.00	BURNT LOG CR	JOHNSON CR	HEADWATERS	1	1	U	U	U
946.00	SAND CR	JOHNSON CR	HEADWATERS	2	1	3	U	U
947.00	QUARTZ CR	SALMON R, S FK E FK	HEADWATERS	1	1	U	U	U
948.00	PROFILE CR	SALMON R, S FK E FK	HEADWATERS	1	1	U	U	U
949.00	TAMARACK CR	SALMON R, S FK E FK	HEADWATERS (EXEMPT)	1	U	U	U	U
950.00	SUGAR CR	SALMON R, S FK E FK	HEADWATERS	1	1	U	U	U
951.00	FITSUM CR	SALMON R, S FK	HEADWATERS	1	1	3	U	U
952.00	BUCKHORN CR	SALMON R, S FK	HEADWATERS	1	1	U	3	U
953.00	COUGAR CR	SALMON R, S FK	HEADWATERS	1	1	3	U	U
954.00	FOURMILE CR	SALMON R, S FK	HEADWATERS	1	1	3	U	U
955.00	BLACKMARE CR	SALMON R, S FK	HEADWATERS	1	1	U	U	U
956.00	SIXBIT CR	SALMON R, S FK	HEADWATERS	U	1	U	U	U
957.00	CABIN CR	SALMON R, S FK	HEADWATERS	1	1	3	U	U
958.00	CURTIS CR	SALMON R, S FK	HEADWATERS	U	1	3	U	U
959.00	RICE CR	SALMON R, S FK	HEADWATERS	U	1	U	1	U

17060209 SALMON RIVER (SNAKE RIVER TO FRENCH CREEK)

SEGMENT #	STREAM SEGMENT	LOWER BOUNDARY	UPPER BOUNDARY	RESIDENT FISH	WILDLIFE	CULTURAL	NATURAL FEATURES	RECREATION
1319.00	SALMON R	SNAKE R	LITTLE SALMON R	1	1	1	1	1
1320.00	SALMON R	LITTLE SALMON R	FRENCH CR	1	1	2	3	1
1321.00	CHINA CR	SALMON R	HEADWATERS	2	2	3	U	U
1322.00	EAGLE CR	SALMON R	HEADWATERS	1	2	U	U	U
1323.00	DEER CR	SALMON R	HEADWATERS	2	2	U	U	U
1324.00	COTTONWOOD CR	SALMON R	HEADWATERS	2	2	U	U	U
1325.00	MALONEY CR	SALMON R	HEADWATERS	2	2	U	U	U
1326.00	DEEP CR	SALMON R	HEADWATERS	2	2	U	U	U
1327.00	RICE CR	SALMON R	HEADWATERS	2	2	U	U	U
1328.00	ROCK CR	SALMON R	HEADWATERS	2	2	2	2	U
1329.00	GRAVE CR	ROCK CR	HEADWATERS	2	3	U	U	U
1330.00	WHITE BIRD CR	SALMON R	HEADWATERS	1	2	2	1	3
1331.00	DEER CR	SALMON R	HEADWATERS	2	2	U	U	U
1332.00	SKOOKUMCHUCK CR	SALMON R	HEADWATERS	1	2	U	U	3
1333.00	SLATE CR	SALMON R	HEADWATERS	1	2	U	1	3
1334.00	SLATE CR, LITTLE	SLATE CR	HEADWATERS	1	2	3	U	3
1335.00	JOHN DAY CR	SALMON R	HEADWATERS	1	2	3	U	U
1336.00	RACE CR	SALMON R	HEADWATERS	2	2	3	U	U
1337.00	LAKE CR	SALMON R	HEADWATERS	1	2	4	2	U
1338.00	ALLISON CR	SALMON R	HEADWATERS	2	2	U	1	U
1339.00	PARTRIDGE CR	SALMON R	HEADWATERS	2	2	3	U	U
1340.00	ELKHORN CR	SALMON R	HEADWATERS	2	2	4	2	U
1341.00	FRENCH CR	SALMON R	HEADWATERS	1	1	3	2	U
1342.00	FRENCH CR, LITTLE	FRENCH CR	HEADWATERS	1	1	U	U	U

17060210 LITTLE SALMON RIVER (ENTIRE DRAINAGE)

SEGMENT #	STREAM SEGMENT	LOWER BOUNDARY	UPPER BOUNDARY	RESIDENT FISH	WILDLIFE	CULTURAL	NATURAL FEATURES	RECREATION
863.00	SALMON R, LITTLE	SALMON R	ROUND VALLEY CR	1	3	3	1	2
864.00	SALMON R, LITTLE	ROUND VALLEY CR	HEADWATERS	1	3	U	2	3
865.00	SQUAW CR	LITTLE SALMON R	HEADWATERS	2	2	U	U	U
866.00	RAPID R	LITTLE SALMON R	FOREST BOUNDARY	1	3	U	U	U
867.00	RAPID R (EXEMPT)	FOREST BOUNDARY	HEADWATERS	U	1	U	U	U
868.00	RAPID R, W FK	RAPID R	HEADWATERS (EXEMPT)	U	1	U	U	U
869.00	ELK CR	LITTLE SALMON R	HEADWATERS	2	2	3	U	U
870.00	BOULDER CR	LITTLE SALMON R	HEADWATERS	1	1	4	1	U
871.00	HAZARD CR	LITTLE SALMON R	HEADWATERS	1	2	U	1	U
872.00	HARD CR	HAZARD CR	HEADWATERS	1	2	4	U	U
873.00	ROUND VALLEY CR	LITTLE SALMON R	HEADWATERS	U	2	U	U	U
874.00	GOOSE CR, E & W FKS	LITTLE SALMON R	PACKER STATE PARK	U	3	U	U	U
875.00	GOOSE CR	PACKER STATE PARK	HEADWATERS	2	3	2	1	U
875.01	GOOSE LK			1	3	U	U	U
875.02	BRUNDAGE RES			1	3	U	U	U
876.00	SIXMILE CR	LITTLE SALMON R	HEADWATERS	2	3	U	U	U
877.00	BIG CR	LITTLE SALMON R	HEADWATERS	3	3	U	U	U
878.00	MUD CR	LITTLE SALMON R	HEADWATERS	3	2	3	2	U

17060301 SELWAY RIVER (ABOVE MOOSE CREEK)

SEGMENT #	STREAM SEGMENT	LOWER BOUNDARY	UPPER BOUNDARY	RESIDENT FISH	WILDLIFE	CULTURAL	NATURAL FEATURES	RECREATION
1274.00	SELWAY R	MOOSE CR	HEADWATERS (EXEMPT)	U	U	U	2	U
1275.00	RUNNING CR	WILDERNESS BOUNDARY	HEADWATERS	1	1	U	1	U
1276.00	DEEP CR	SELWAY R	MONTANA LINE	U	1	U	U	U

17060302 SELWAY RIVER (BELOW MOOSE CREEK (INCLUSIVE))

SEGMENT #	STREAM SEGMENT	LOWER BOUNDARY	UPPER BOUNDARY	RESIDENT FISH	WILDLIFE	CULTURAL	NATURAL FEATURES	RECREATION
1260.00	SELWAY R	LOWELL (TOWN)	MOOSE CR (EXEMPT)	U	U	U	1	U
1261.00	GODDARD CR	SELWAY R	HEADWATERS	1	1	4	U	U
1262.00	OHARA CR	SELWAY R	HEADWATERS	1	1	2	1	U
1263.00	FALLS CR	SELWAY R	HEADWATERS	1	1	4	2	U
1264.00	GEDNEY CR	SELWAY R	WILDERNESS BOUNDARY	1	1	U	2	U
1265.00	MEADOW CR	SELWAY R	HEADWATERS	1	1	U	1	3
1266.00	BUCK LAKE CR	MEADOW CR	WILDERNESS BOUNDARY	1	1	U	U	U
1267.00	SABLE CR	MEADOW CR	HEADWATERS	1	1	U	U	U
1268.00	BUTTE CR	MEADOW CR	HEADWATERS	1	1	U	U	U
1269.00	SIMMONS CR	SABLE CR	HEADWATERS	1	1	U	U	U
1270.00	SCHWAR CR	MEADOW CR	WILDERNESS BOUNDARY	1	1	U	U	U
1271.00	THREE PRONG CR	MEADOW CR	HEADWATERS	1	1	U	U	U

17060303 LOCHSA RIVER (ENTIRE DRAINAGE)

SEGMENT #	STREAM SEGMENT	LOWER BOUNDARY	UPPER BOUNDARY	RESIDENT FISH	WILDLIFE	CULTURAL	NATURAL FEATURES	RECREATION
1236.00	LOCHSA R	LOWELL (TOWN)	HEADWATERS (EXEMPT)	U	U	U	1	U
1236.01	PETE KING CR	LOCHSA R	HEADWATERS	1	1	U	U	U
1236.02	WEIR CR	LOCHSA R	HEADWATERS	1	3	U	U	U
1236.03	POST OFFICE CR	LOCHSA R	HEADWATERS	1	2	U	U	U
1236.04	SQUAW CR	LOCHSA R	HEADWATERS	1	1	U	U	U
1236.05	BADGER CR	LOCHSA R	HEADWATERS	1	1	U	U	U
1236.06	WENDOVER CR	LOCHSA R	HEADWATERS	1	1	U	U	U
1236.07	PAPOOSE CR	LOCHSA R	HEADWATERS	1	1	U	U	U
1236.44	DOE CR	SQUAW CR	HEADWATERS	1	1	U	U	U
1236.77	PARACHUTE CR	PAPOOSE CR	HEADWATERS	2	1	U	U	U
1237.00	CANYON CR	LOCHSA R	HEADWATERS	2	1	2	U	U
1237.01	GLADE CR	LOCHSA R	HEADWATERS	1	1	U	U	U
1238.00	DEADMAN CR	LOCHSA R	HEADWATERS	1	1	4	2	U
1238.01	COOLWATER CR	LOCHSA R	HEADWATERS	1	1	U	U	U
1238.02	BIMERICK CR	LOCHSA R	HEADWATERS	1	1	U	U	U
1239.00	FIRE CR	LOCHSA R	HEADWATERS	1	1	U	U	U
1240.00	SPLIT CR	LOCHSA R	WILDERNESS BOUNDARY	1	1	U	2	U
1241.00	OLD MAN CR	LOCHSA R	HEADWATERS (EXEMPT)	U	1	U	U	U
1242.00	FISH CR	LOCHSA R	HEADWATERS	1	1	U	U	3
1243.00	HUNGARY CR	FISH CR	HEADWATERS	1	1	1	U	3
1244.00	BOULDER CR	LOCHSA R	WILDERNESS BOUNDARY	1	1	U	U	U
1244.01	SHERMAN CR	LOCHSA R	HEADWATERS	1	1	U	U	U
1244.02	BALD MOUNTAIN CR	LOCHSA R	HEADWATERS	1	U	U	U	U
1245.00	STANLEY CR	LOCHSA R	WILDERNESS BOUNDARY	1	1	U	U	U
1246.00	INDIAN GRAVE CR	LOCHSA R	HEADWATERS	1	1	4	U	U
1247.00	FISH LAKE CR	LOCHSA R	WILDERNESS BOUNDARY	1	1	U	U	U
1248.00	SPONGE CR	FISH L CR	HEADWATERS (EXEMPT)	U	U	U	U	U
1249.00	WARM SPRINGS CR	LOCHSA R	WILDERNESS BOUNDARY	1	1	3	3	2
1249.01	WALTON CR	LOCHSA R	HEADWATERS	1	2	U	U	U
1250.00	WHITE SANDS CR	LOCHSA R	WILDERNESS BOUNDARY	1	1	1	2	3
1251.00	COLT CR	WHITE SANDS CR	HEADWATERS	1	2	U	1	U
1252.00	STORM CR	WHITE SANDS CR	WILDERNESS BOUNDARY	1	2	U	U	U
1253.00	BIG SAND CR	LOCHSA R	HEADWATERS (EXEMPT)	U	U	U	U	U
1254.00	BIG FLAT CR	LOCHSA R	HEADWATERS (EXEMPT)	U	U	U	U	U
1255.00	CROOKED FK	LOCHSA R	HEADWATERS	1	2	1	1	2
1255.01	HOPEFUL CR	CROOKED FK	HEADWATERS	1	2	U	U	U
1256.00	BRUSHY FK	CROOKED FK	HEADWATERS	1	1	1	U	3
1256.01	SPRUCE CR	BRUSHY FK	HEADWATERS	1	1	U	U	U
1257.00	BOULDER CR	CROOKED FK	HEADWATERS	1	1	1	U	U

17060304 M.FK CLEARWATER (KOOSKIA TO LOWELL)

SEGMENT #	STREAM SEGMENT	LOWER BOUNDARY	UPPER BOUNDARY	RESIDENT FISH	WILDLIFE	CULTURAL	NATURAL FEATURES	RECREATION
1279.00	CLEARWATER R, M FK	KOOSKIA (TOWN)	LOWELL(TOWN)(EXEMPT)	U	U	U	2	U
1280.00	MAGGIE CR	CLEARWATER R, M FK	HEADWATERS	U	2	U	U	U
1281.00	CLEAR CR	CLEARWATER R, M FK	HEADWATERS	1	2	U	U	3

17060304 M.FK CLEARWATER (KOOSKIA TO LOWELL) [Cont.]

SEGMENT #	STREAM SEGMENT	LOWER BOUNDARY	UPPER BOUNDARY	RESIDENT FISH	WILDLIFE	CULTURAL	NATURAL FEATURES	RECREATION
282.00	CLEAR CR, S FK	CLEAR CR	HEADWATERS	1	2	U	U	3
283.00	CLEAR CR, M FK	CLEAR CR	HEADWATERS	1	2	U	U	3

17060305 S.FK. CLEARWATER R. (ENTIRE DRAINAGE)

SEGMENT #	STREAM SEGMENT	LOWER BOUNDARY	UPPER BOUNDARY	RESIDENT FISH	WILDLIFE	CULTURAL	NATURAL FEATURES	RECREATION
286.00	CLEARWATER R, S FK	CLEARWATER R	MILL CR	1	1	2	2	1
287.00	CLEARWATER R, S FK	MILL CR	AMERICAN R	1	1	3	U	1
288.00	COTTONWOOD CR	CLEARWATER R, S FK	HEADWATERS	3	3	3	U	U
289.00	RED ROCK CR	COTTONWOOD CR	HEADWATERS	4	3	U	U	U
290.00	COTTONWOOD CR, S FK	COTTONWOOD CR	HEADWATERS	4	3	U	U	U
291.00	THREEMILE CR	CLEARWATER R, S FK	HEADWATERS	2	3	U	U	U
292.00	BUTCHER CR	CLEARWATER R, S FK	HEADWATERS	2	3	U	2	U
293.00	MILL CR	CLEARWATER R, S FK	HEADWATERS	1	1	U	U	U
294.00	MEADOW CR	CLEARWATER R, S FK	HEADWATERS	1	1	3	U	U
295.00	JOHNS CR	CLEARWATER R, S FK	WILDERNESS BOUNDARY	1	1	U	U	2
296.00	PEASLEY CR	CLEARWATER R, S FK	HEADWATERS	1	1	4	U	U
297.00	SILVER CR	CLEARWATER R, S FK	HEADWATERS	2	1	U	U	U
298.00	WING CR	CLEARWATER R, S FK	HEADWATERS	U	1	U	U	U
299.00	TWENTYMILE CR	CLEARWATER R, S FK	WILDERNESS BOUNDARY	1	1	U	U	U
300.00	TENMILE CR	CLEARWATER R, S FK	WILDERNESS BOUNDARY	1	1	4	U	U
301.00	NEWSOME CR	CLEARWATER R, S FK	HEADWATERS	1	1	2	1	3
302.00	CROOKED R	CLEARWATER R, S FK	HEADWATERS	1	1	2	2	3
303.00	AMERICAN R	CLEARWATER R, S FK	HEADWATERS	2	1	3	2	3
304.00	ELK CR, BIG	AMERICAN R	HEADWATERS	2	3	2	2	U
305.00	KIRKS FK	AMERICAN R	HEADWATERS	1	1	4	U	U
305.01	AMERICAN R, E FK	AMERICAN R	HEADWATERS	2	1	U	U	U
306.00	RED R	CLEARWATER R, S FK	HEADWATERS	1	1	3	2	3
307.00	RED R, S FK	RED R	HEADWATERS	2	1	3	2	3

17060306 CLEARWATER RIVER (SNAKE RIVER TO KOOSKIA)

SEGMENT #	STREAM SEGMENT	LOWER BOUNDARY	UPPER BOUNDARY	RESIDENT FISH	WILDLIFE	CULTURAL	NATURAL FEATURES	RECREATION
1139.00	CLEARWATER R	WASHINGTON LINE	CLEARWATER R, N FK	1	1	1	U	1
1140.00	CLEARWATER R	CLEARWATER R, N FK	CLEARWATER R, S FK	1	1	2	1	1
1141.00	LINDSAY CR	CLEARWATER R	HEADWATERS	3	4	U	U	U
1142.00	HATWAI CR	CLEARWATER R	HEADWATERS	3	3	1	U	U
1143.00	LAPWAI CR	CLEARWATER R	HEADWATERS	2	3	2	2	U
1144.00	TOM BEALL CR	LAPWAI CR	HEADWATERS	U	3	U	U	U
1145.00	SWEETWATER CR	LAPWAI CR	HEADWATERS	2	3	U	2	U
1146.00	WEBB CR	SWEETWATER CR	HEADWATERS	U	3	U	U	U
1147.00	MISSION CR	LAPWAI CR	HEADWATERS	2	3	1	U	U
1148.00	CATHOLIC CR	CLEARWATER R	HEADWATERS	3	3	U	U	U

17060306 CLEARWATER RIVER (SNAKE RIVER TO KOOSKIA) [Cont.]

SEGMENT #	STREAM SEGMENT	LOWER BOUNDARY	UPPER BOUNDARY	RESIDENT FISH	WILDLIFE	CULTURAL	NATURAL FEATURES	RECREATION
1149.00	POTLATCH R	CLEARWATER R	BEAR CR	4	3	3	U	2
1150.00	POTLATCH R	BEAR CR	HEADWATERS	2	3	2	1	2
1151.00	POTLATCH CR, LITTLE	POTLATCH R	HEADWATERS	4	3	U	U	U
1152.00	POTLATCH CR, MIDDLE	POTLATCH R	HEADWATERS	3	3	U	1	U
1153.00	BEAR CR, BIG	POTLATCH R	HEADWATERS	2	3	U	1	U
1154.00	BEAR CREEK, LITTLE	POTLATCH R	HEADWATERS	U	3	U	2	U
1155.00	PINE CR	POTLATCH R	HEADWATERS	U	3	U	U	U
1156.00	CEDAR CR	POTLATCH R	HEADWATERS	2	3	U	U	U
1157.00	POTLATCH R, E FK	POTLATCH R	HEADWATERS	2	3	3	2	U
1158.00	RUBY CR	POTLATCH R, E FK	HEADWATERS	U	2	3	U	U
1159.00	MOOSE CR	POTLATCH R	HEADWATERS	U	3	U	U	U
1160.00	COTTONWOOD CR	CLEARWATER R	HEADWATERS	2	3	U	U	U
1161.00	PINE CR	CLEARWATER R	HEADWATERS	3	3	U	U	U
1162.00	BEDROCK CR	CLEARWATER R	HEADWATERS	2	3	U	U	U
1163.00	JACKS CR	CLEARWATER R	HEADWATERS	2	3	U	U	U
1164.00	CANYON CR, BIG	CLEARWATER R	SIXMILE CANYON	1	3	U	3	U
1164.10	CANYON CR, BIG	SIXMILE-CANYON	HEADWATERS	2	3	U	U	U
1165.00	CANYON CR, LITTLE	BIG CANYON CR	HEADWATERS	2	3	U	U	U
1166.00	LONG HOLLOW CR	LITTLE CANYON CR	HEADWATERS	3	3	U	U	U
1167.00	COLD SPRINGS CR	BIG CANYON CR	HEADWATERS	2	3	U	U	U
1168.00	OROFINO CR	CLEARWATER R	OROFINO FALLS	2	3	1	U	U
1169.00	OROFINO CR	OROFINO FALLS	HEADWATERS	2	2	2	2	U
1170.00	WHISKEY CR	OROFINO CR	HEADWATERS	U	2	U	U	U
1171.00	JIM FORD CR	CLEARWATER R	HEADWATERS	2	2	1	U	U
1172.00	GRASSHOPPER CR	JIM FORD CR	HEADWATERS	U	3	U	U	U
1172.01	BIG CR	CLEARWATER R	HEADWATERS	2	3	U	U	U
1173.00	LOLO CR	CLEARWATER R	ELDORADO CR	1	2	U	3	1
1174.00	LOLO CR	ELDORADO CR	HEADWATERS	1	1	1	2	1
1175.00	ELDORADO CR	LOLO CR	HEADWATERS	1	1	1	1	U
1176.00	JIM BROWN CR	MUSSELSHELL CR	HEADWATERS	3	2	2	U	U
1177.00	MUSSELSHELL CR	JIM BROWN CR	HEADWATERS	2	1	2	2	U
1178.00	YOOSA CR	LOLO CR	HEADWATERS	1	2	2	U	U
1179.00	SIXMILE CR	CLEARWATER R	HEADWATERS	2	3	3	U	U
1180.00	LAWYERS CR	CLEARWATER R	HEADWATERS	2	3	3	2	U
1181.00	SEVENMILE CR	LAWYERS CR	HEADWATERS	2	3	U	U	U

17060307 N.FK. CLEARWATER R. (ABOVE ISABELLA CK)

SEGMENT #	STREAM SEGMENT	LOWER BOUNDARY	UPPER BOUNDARY	RESIDENT FISH	WILDLIFE	CULTURAL	NATURAL FEATURES	RECREATION
1208.00	CLEARWATER R, N FK	ISABELLA CR	KELLY CR	1	1	2	1	2
1209.00	CLEARWATER R, N FK	KELLY CR	HEADWATERS	1	1	2	2	2
1210.00	BEAVER CR	CLEARWATER R, N FK	HEADWATERS	1	1	2	1	4
1211.00	SKULL CR	CLEARWATER R, N FK	HEADWATERS	1	1	3	U	4
1212.00	COLLINS CR	SKULL CR	HEADWATERS	1	1	3	U	U
1213.00	QUARTZ CR	CLEARWATER R, N FK	HEADWATERS	1	1	3	U	4
1214.00	WASHINGTON CR	CLEARWATER R, N FK	HEADWATERS	1	1	2	2	U

17060307 N.FK. CLEARWATER R. (ABOVE ISABELLA CK) [Cont.]

SEGMENT #	STREAM SEGMENT	LOWER BOUNDARY	UPPER BOUNDARY	RESIDENT FISH	WILDLIFE	CULTURAL	NATURAL FEATURES	RECREATION
1215.00	OROGRANDE CR	CLEARWATER R, N FK	HEADWATERS	2	1	2	2	3
1216.00	FRENCH CR	OROGRANDE CR	HEADWATERS	1	1	2	2	U
1217.00	WEITAS CR	CLEARWATER R, N FK	HEADWATERS	1	1	U	U	3
1218.00	HEMLOCK CR	WEITAS CR	HEADWATERS	1	1	U	U	U
1219.00	MIDDLE CR	WEITAS CR	HEADWATERS	1	1	4	U	U
1220.00	WEITAS CR, LITTLE	WEITAS CR	HEADWATERS	1	1	U	U	U
1221.00	4TH OF JULY CR	CLEARWATER R, N FK	HEADWATERS	1	1	U	U	U
1222.00	KELLY CR	CLEARWATER R, N FK	HEADWATERS	1	1	U	1	1
1223.00	MOOSE CR	KELLY CR	HEADWATERS	1	1	2	2	4
1224.00	MOOSE CR, LITTLE	MOOSE CR	HEADWATERS	1	1	U	U	U
1225.00	OSIER CR	MOOSE CR	HEADWATERS	2	1	U	U	U
1226.00	CAYUSE CR	KELLY CR	HEADWATERS	1	1	1	3	1
1227.00	TOBOGGAN CR	CAYUSE CR	HEADWATERS	1	1	U	U	U
1228.00	MONROE CR	CAYUSE CR	HEADWATERS	1	1	U	U	U
1229.00	GRAVEY CR	CAYUSE CR	HEADWATERS	2	1	1	U	U
1230.00	LAKE CR	CLEARWATER R, N FK	HEADWATERS	1	1	U	1	3
1231.00	LONG CR	CLEARWATER R, N FK	HEADWATERS	1	1	3	U	U
1232.00	MEADOW CR	CLEARWATER R, N FK	HEADWATERS	1	1	3	U	U
1233.00	VANDERBILT CR	CLEARWATER R, N FK	HEADWATERS	1	1	2	U	U

17060308 N.FK. CLEARWATER R. (CLEARWATER R. TO ISABELLA CK)

SEGMENT #	STREAM SEGMENT	LOWER BOUNDARY	UPPER BOUNDARY	RESIDENT FISH	WILDLIFE	CULTURAL	NATURAL FEATURES	RECREATION
1184.00	CLEARWATER R, N FK	CLEARWATER R	DWORSHAK DAM	1	1	3	U	3
1185.00	DWORSHAK RES			1	1	U	1	U
1186.00	CLEARWATER R, N FK	DWORSHAK RES	ISABELLA CR	1	1	3	1	U
1187.00	DICKS CR	DWORSHAK RES	HEADWATERS	U	1	U	U	U
1188.00	LONG MEADOW CR	DWORSHAK RES	HEADWATERS	3	1	2	2	U
1189.00	ELK CR	DWORSHAK RES	HEADWATERS	2	1	2	1	2
1190.00	ELK CREEK RES			3	3	U	U	U
1191.00	CRANBERRY CR	DWORSHAK RES	HEADWATERS	2	1	3	U	U
1192.00	SWAMP CR	DWORSHAK RES	HEADWATERS	U	1	3	U	U
1193.00	REEDS CR	DWORSHAK RES	HEADWATERS	U	1	U	2	U
1194.00	SILVER CR	DWORSHAK RES	HEADWATERS	U	1	U	U	U
1195.00	GOLD CR	DWORSHAK RES	HEADWATERS	U	1	U	U	U
1196.00	CLEARWATER R, N FK L	DWORSHAK RES	FOAL CR	1	1	3	1	2
1197.00	BREAKFAST CR	CLEARWATER R, N FK L	HEADWATERS	2	1	U	U	U
1198.00	FLOODWOOD CR	BREAKFAST CR	HEADWATERS	3	1	U	1	U
1199.00	STONY CR	BREAKFAST CR	HEADWATERS	3	1	U	1	U
1200.00	GLOVER CR	STONY CR	HEADWATERS	U	1	4	2	U
1201.00	SAWTOOTH CR	CLEARWATER R, N FK L	HEADWATERS	1	1	U	U	3
1202.00	CANYON CR	CLEARWATER R, N FK L	HEADWATERS	1	1	U	U	U
1203.00	SPOTTED LUIS CANYON	CLEARWATER R, N FK L	HEADWATERS	U	1	U	U	U
1204.00	BENTON CR	DWORSHAK RES	HEADWATERS	U	1	U	U	U
1205.00	ISABELLA CR	CLEARWATER R, N FK	HEADWATERS	1	1	3	1	U